Consolidated Construction Projects For FISC, Pearl Harbor, Hawaii
Contract No. N62742-C-02-1402
Clean And Repair Tanks 1 And 15, 6 And 16
Weld Repair As Built Record

Tank 15

Quadrant A, B, D, Tank Floor, and Lower Dome
Weld Repairs Completed June 2005
Reference TESTEX Report Dated 2-18-2005
And Government Provided Repair Procedure Spreadsheet

Contents:

Tank 15 As Built Repair Summary

Tank 15 As Built Sketches For Repairs 15-001 to 15-073

Tank 15 Maps (By Testex)

Tank 15 Flaw Locations (By Testex)

Repair Procedure Spreadsheet (Government Provided)

Tank 15 As Built Repair Summary

D&B Repair No.	Repair Location	Plate Number	Testex Flaw Number	E&I Repair Flaw Number	As Built Repair
15001	Upper Dome	4	1	A1	One 4"x14"x1/4" patch plate to cover A1 & A2
	Quadrant A	4	2	A2	
15002		4	3	A3	5"x1/4" round patch plate
15003		4	4	A4	One 10"x12"x1/4" patch plate to cover A4 & A5
		4	5	A5	
15004		5	1	A6	5"x1/4" round patch plate
15005		5C	1	A7	5"x1/4" round patch plate
15006		5C	2	A8	5"x1/4" round patch plate
15007		5C	3	A9	5"x1/4" round patch plate
15008		6C	10	A10	One 4"x10"x1/4" patch plate to cover A10 & A11
		6C	11	A11	
15009		6C	12	A12	5"x1/4" round patch plate
15010		6C	13	A13	One 6"x10"x1/4" patch plate to cover A13 & A14
		6C	14	A14	
15011		6C	15	A15	5"x1/4" round patch plate
15012		6C	16	A16	One 5"x11"x1/4" patch plate to cover A16 & A17
		6C	17	A17	
15013		6C	18	A18	5"x11"x1/4" patch plate
15014		6C	19	A19	5"x1/4" round patch plate
15015		6C	20	A20	7"x7"x1/4" patch plate
15016		6C	21	A21	5"x1/4" round patch plate
15017		6C	22	A22	One 10"x12"x1/4" patch plate to cover A22 & A23
		6C	23	A23	
15018		6C	24	A24	5"x1/4" round patch plate
15019		8C	25	A25	5"x1/4" round patch plate
15020		9C	26	A26	5"x1/4" round patch plate
15021		9C	27	A27	5"x1/4" round patch plate
15022		8B	28	A28	5"x1/4" round patch plate
15023	Quadrant B	22	1	B1	12"x12"x1/4" patch plate
15024		22	2	B2	10"x12"x1/4" patch plate
15025		22	3	B3	5"x1/4" round patch plate
15026		22	4	B4	4"x12"x1/4" patch plate
15027		10C	1	B5	5"x1/4" round patch plate
15028		10C	2	B6	5"x1/4" round patch plate
15029		10C	3	B7	5"x1/4" round patch plate
15030		11C	1	B8	5"x1/4" round patch plate
15031		12C	1	B9	5"x1/4" round patch plate
15032		14C	1	B10	5"x1/4" round patch plate
15033		14C	2	B11	5"x1/4" round patch plate
15034		14C	3	B12	5"x1/4" round patch plate
15035		14C	4	B13	5"x1/4" round patch plate
15036		17C	1	B14	5"x1/4" round patch plate
15037		17C	2	B15	One 5"x11"x1/4" patch plate to cover B15 & B16
		17C	3	B16	
15038		18C	1	B17	5"x1/4" round patch plate

Tank 15 As Built Repair Summary

D&B Repair No.	Repair Location	Plate Number	Testex Flaw Number	E&I Repair Flaw Number	As Built Repair
15039		18C	2	B18	One 9"x11"x1/4" patch plate to cover B18 & B19
		18C	3	B19	
15040		19C	1	B20	One 10"x13"x1/4" patch plate to cover B20, B21, & B22
		19C	2	B21	
		19C	3	B22	
15041		19C	4	B23	One 10"x10"x1/4" patch plate to cover B23, B24, & B25
		19C	5	B24	
		19C	6	B25	
15042		5	1	B26	One 6"x12"x1/4" patch plate to cover B26 & B27
		5	2	B27	
15043		5	3	B28	One 4"x10"x1/4" patch plate to cover B28 & B29
		5	4	B29	
15044		5	5	B30	One 6"x12"x1/4" patch plate to cover B30 & B31
		5	6	B31	
15045		5	7	B32	5"x1/4" round patch plate
15046		5	8	B33	4"x14"x1/4" patch plate
15047		8	1	B34	6"x12"x1/4" patch plate to cover B34 & B35
		8	2	B35	
15048		8	3	B36	5"x1/4" round patch plate
15049		8	4	B37	Weld repair around nozzle approximately 4"
15050		Vert Scan 3	1	B38	5"x1/4" round patch plate
15051	Quadrant D	Vert Scan 5	1	D1	Weld repair around plug approximately 6"
15052		6	2	D2	5"x1/4" round patch plate
15053	Floor Plates	2	1	1	5"x1/4" round patch plate
15054		3	1	1	Remove defect and reweld - approximately 5"
15055		3	2	2	Remove defect and reweld - approximately 6"
15056		4	3	3	Remove defect and reweld - approximately 4"
15057	Lower Dome	2	1	1	Remove defect and reweld - approximately 5"
15058	Course 1	6	2	2	Remove defect and reweld - approximately 4"
15059		7	3	3	Remove defect and reweld - approximately 4"
15060		7	4	4	Remove defect and reweld - approximately 6"
15061		14	5	5	Remove defect and reweld - approximately 5"
15062		20	6	6	Remove defect and reweld - approximately 7"
15063		23	7	7	Remove defect and reweld - approximately 6"
15064		23	8	8	Remove defect and reweld - approximately 2"
15065		24	9	9	Remove defect and reweld - approximately 5"
15066		24	10	10	Remove defect and reweld - approximately 6"
15067		25	11	11	Remove defect and reweld - approximately 4"
15068		26	12	12	Remove defect and reweld - approximately 3"
15069		28/29	13	13	Remove defect and reweld - approximately 4"
15070		32	14	14	Remove defect and reweld - approximately 5"
15071		35	15	15	Remove defect and reweld - approximately 6"
15072		43/44	16	16	Remove defect and reweld - approximately 6"
15073		44	17	17	Remove defect and reweld - approximately 4"

Consolidated Construction Projects For FISC, Pearl Harbor, Hawaii
Contract No. N62742-C-02-1402
Clean And Repair Tanks 1 And 15, 6 And 16
Weld Repair As Built Record

Tank 15
Quadrant A
Upper Dome Course A
Plates 4 & 5
Reference TESTEX Report 2-18-2005 Page 9 Figures 6 and 7
Repair # 15-001 to 15-004, Flaw No. A1 to A6

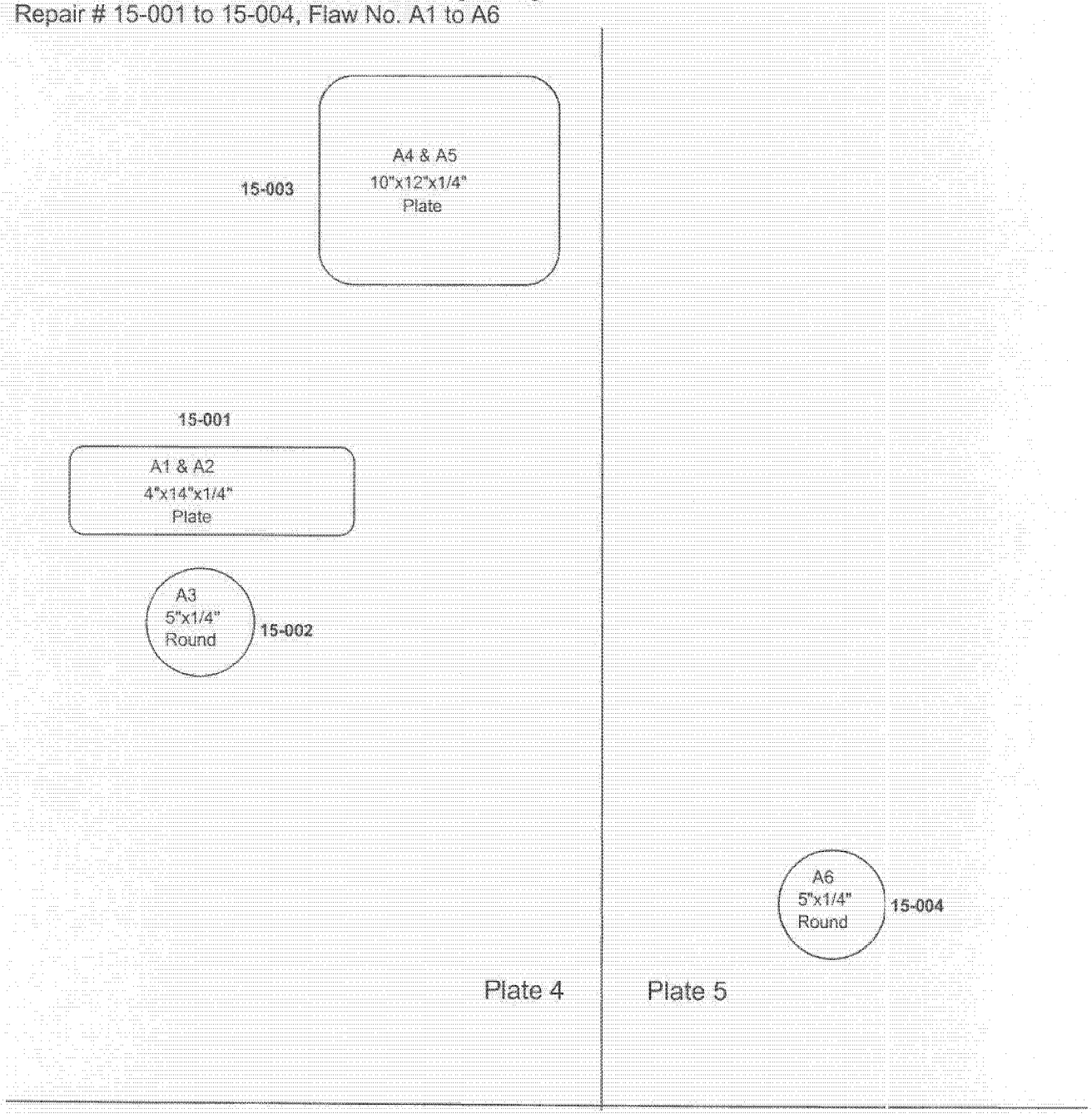

Consolidated Construction Projects For FISC, Pearl Harbor, Hawaii
Contract No. N62742-C-02-1402
Clean And Repair Tanks 1 And 15, 6 And 16
Weld Repair As Built Record

Tank 15
Quadrant A
Upper Dome Extension Course Row 2
Plate 5C
Reference TESTEX Report 2-18-2005 Page 11 Figure 9
Repair # 15-005 to 15-007, Flaw No. A7 - A9

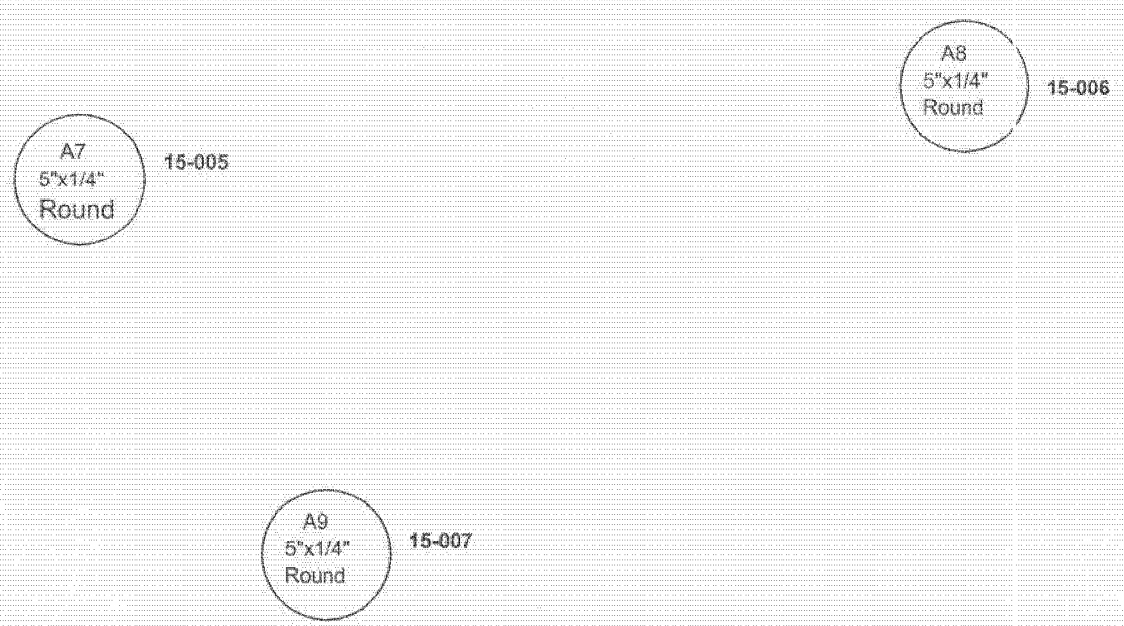

Plate 5C

Consolidated Construction Projects For FISC, Pearl Harbor, Hawaii
Contract No. N62742-C-02-1402
Clean And Repair Tanks 1 And 15, 6 And 16
Weld Repair As Built Record

Tank 15
Quadrant A
Upper Dome Extension Course Row 2
Plate 6C
Reference TESTEX Report 2-18-2005 Page 10 Figure 8
Repair # 15-008 to 15-010, Flaw No. A10 - A14

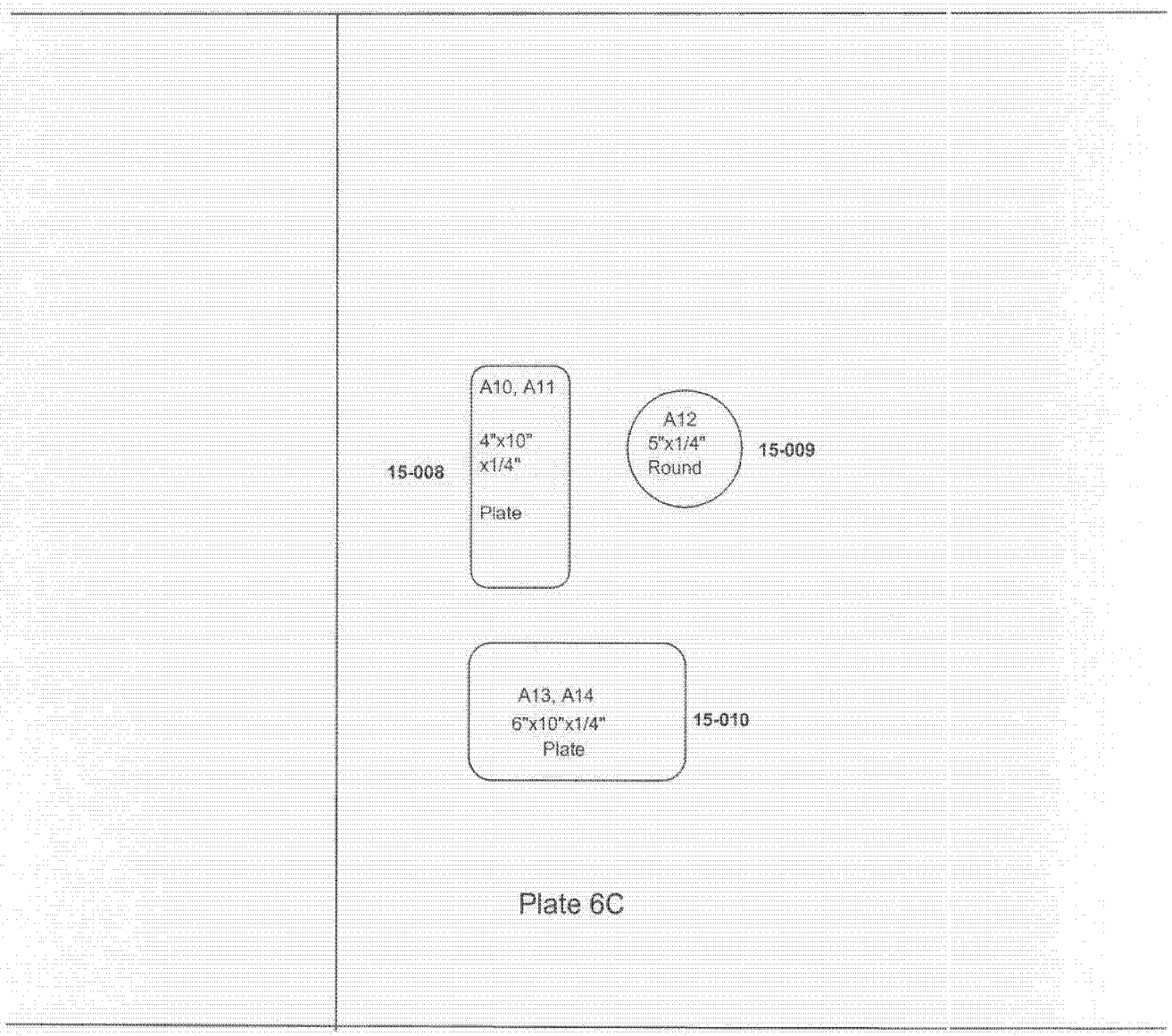

Consolidated Construction Projects For FISC, Pearl Harbor, Hawaii
Contract No. N62742-C-02-1402
Clean And Repair Tanks 1 And 15, 6 And 16
Weld Repair As Built Record

Tank 15
Quadrant A
Upper Dome Extension Course Row 2
Plate 6C
Reference TESTEX Report 2-18-2005 Page 10 Figure 8
Repair # 15-011 to 15-018, Flaw No. A15 - A24
Modified plate size due to field conditions

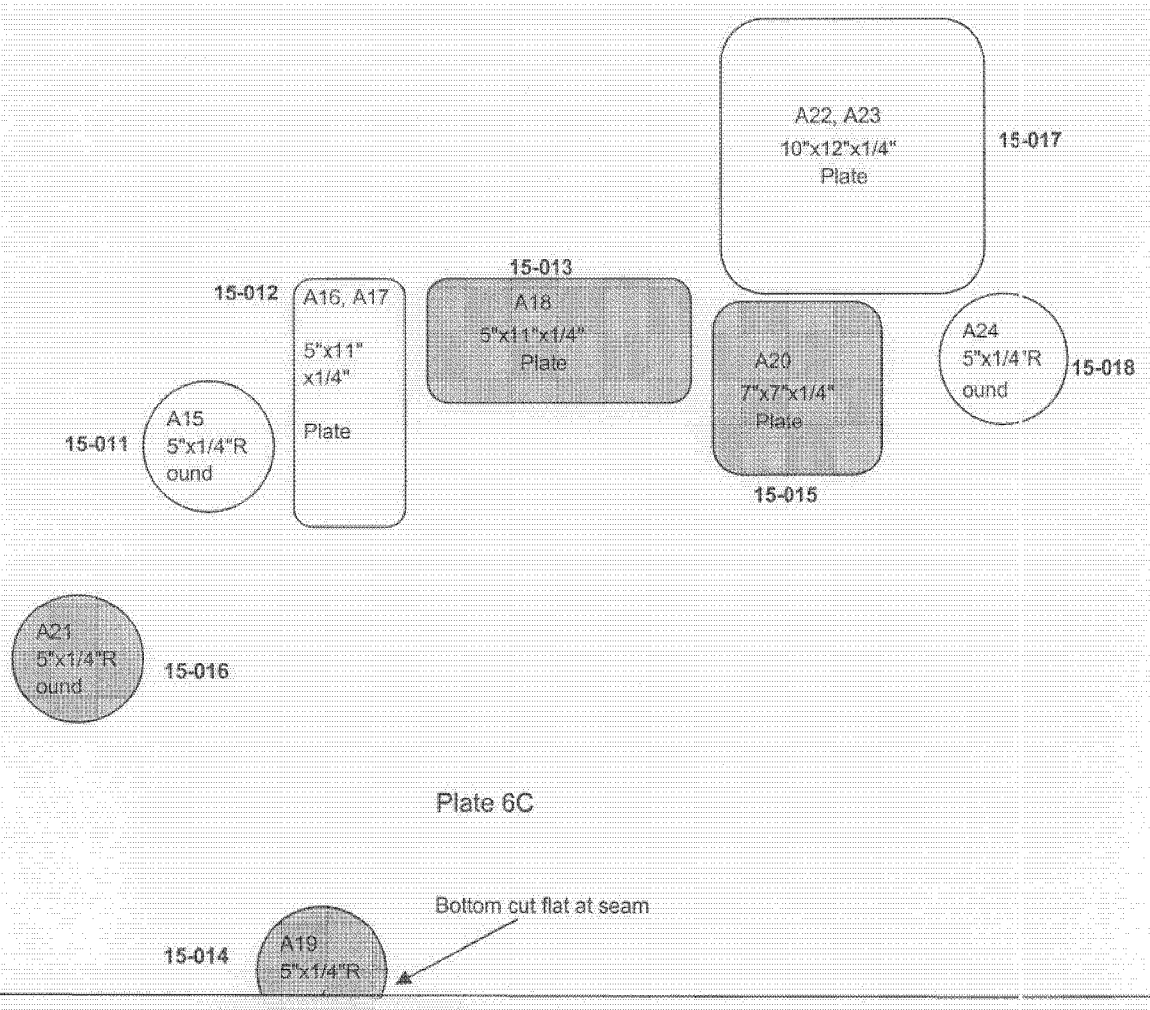

Consolidated Construction Projects For FISC, Pearl Harbor, Hawaii
Contract No. N62742-C-02-1402
Clean And Repair Tanks 1 And 15, 6 And 16
Weld Repair As Built Record

Tank 15
Quadrant A
Upper Dome Extension Course Row 2
Plate 8C
Reference TESTEX Report 2-18-2005 Page 11 Figure 10
Repair # 15-019, Flaw No. A25

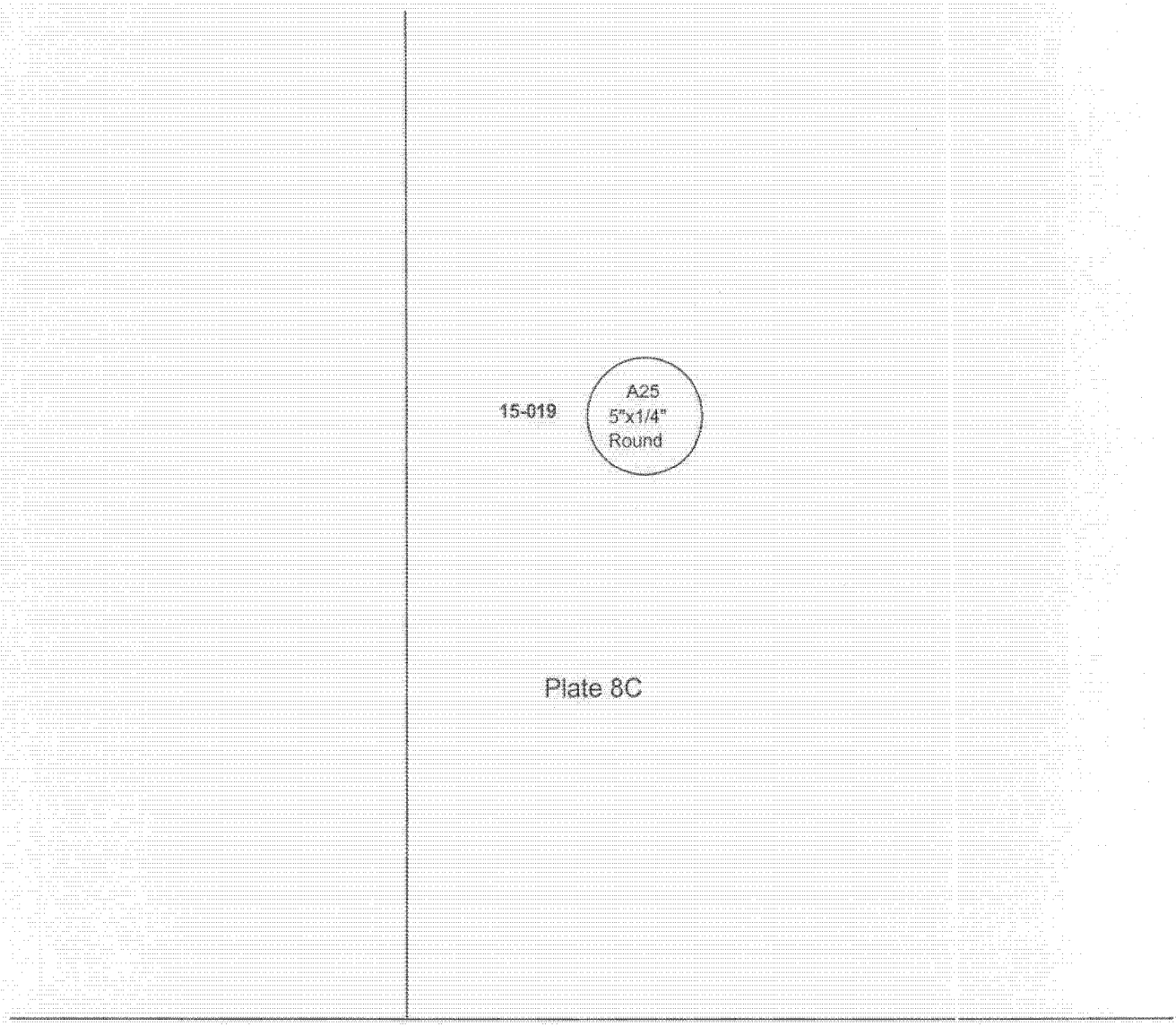

Consolidated Construction Projects For FISC, Pearl Harbor, Hawaii
Contract No. N62742-C-02-1402
Clean And Repair Tanks 1 And 15, 6 And 16
Weld Repair As Built Record

Tank 15
Quadrant A
Upper Dome Extension Course Row 2
Plate 9C
Reference TESTEX Report 2-18-2005 Page 12 Figure 11
Repair # 15-020 to 15-021 Flaw No. A26, A27

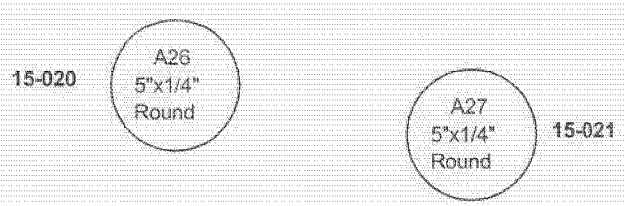

Plate 9C

Consolidated Construction Projects For FISC, Pearl Harbor, Hawaii
Contract No. N62742-C-02-1402
Clean And Repair Tanks 1 And 15, 6 And 16
Weld Repair As Built Record

Tank 15
Quadrant A
Upper Dome Extension Course Row 3
Plate 8B
Reference TESTEX Report 2-18-2005 Page 13 Figure 12
Repair # 15-022, Flaw No. A28

A28
5"x1/4"
Round

15-022

Consolidated Construction Projects For FISC, Pearl Harbor, Hawaii
Contract No. N62742-C-02-1402
Clean And Repair Tanks 1 And 15, 6 And 16
Weld Repair As Built Record

Tank 15
Quadrant B
Upper Dome Course A
Plate 22
Reference TESTEX Report 2-18-2005 Page 15 Figure 14
Repair # 15-023 to 15-026, Flaw No. B1-B4
Modified plate size due to field conditions

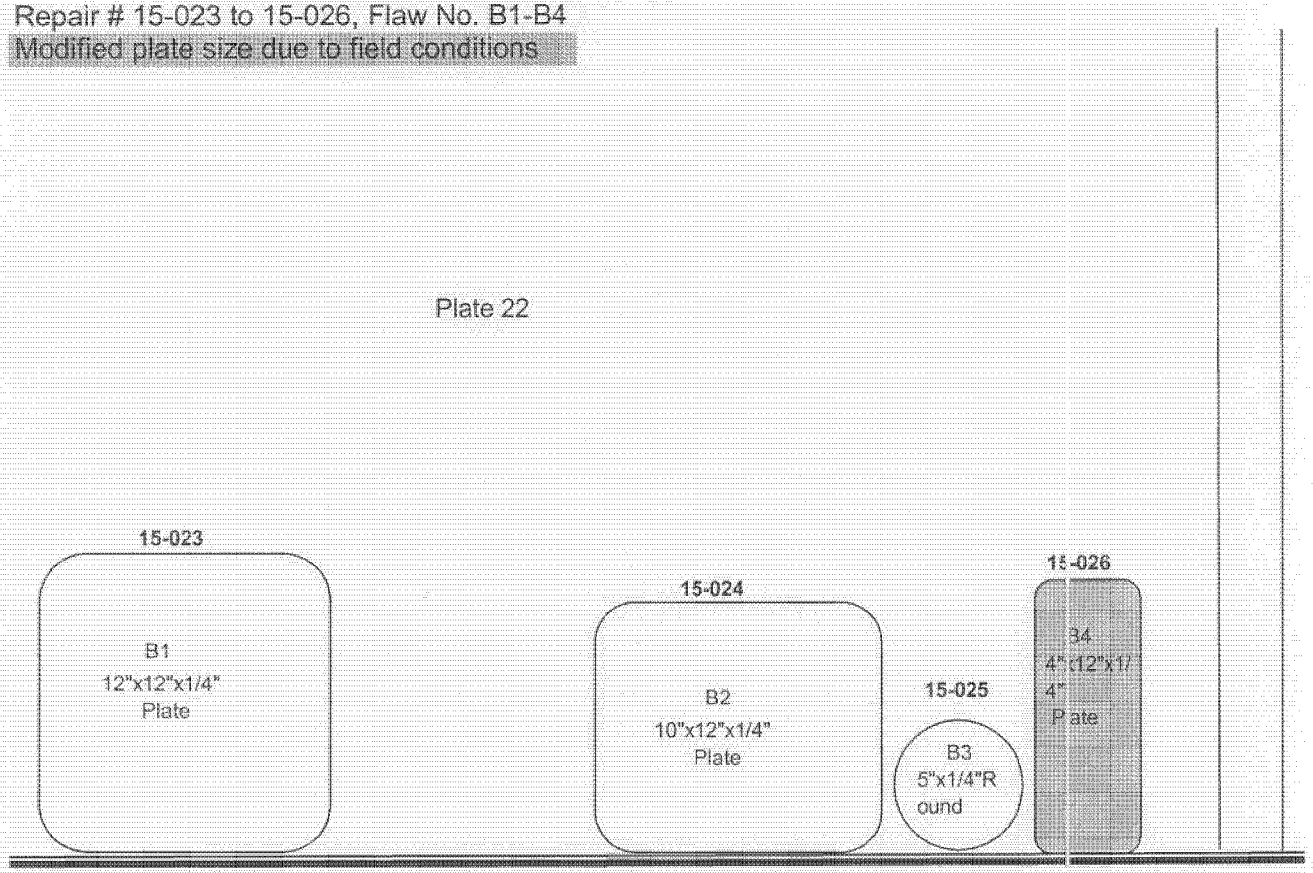

Consolidated Construction Projects For FISC, Pearl Harbor, Hawaii
Contract No. N62742-C-02-1402
Clean And Repair Tanks 1 And 15, 6 And 16
Weld Repair As Built Record

Tank 15
Quadrant B
Extension Course Row 2
Plates 10C and 11C
Reference TESTEX Report 2-18-2005 Page 16 Figures 15 & 16
Repair # 15-027 to 15-030, Flaw No. B5-B8
Plate Modified Due To Field Conditions

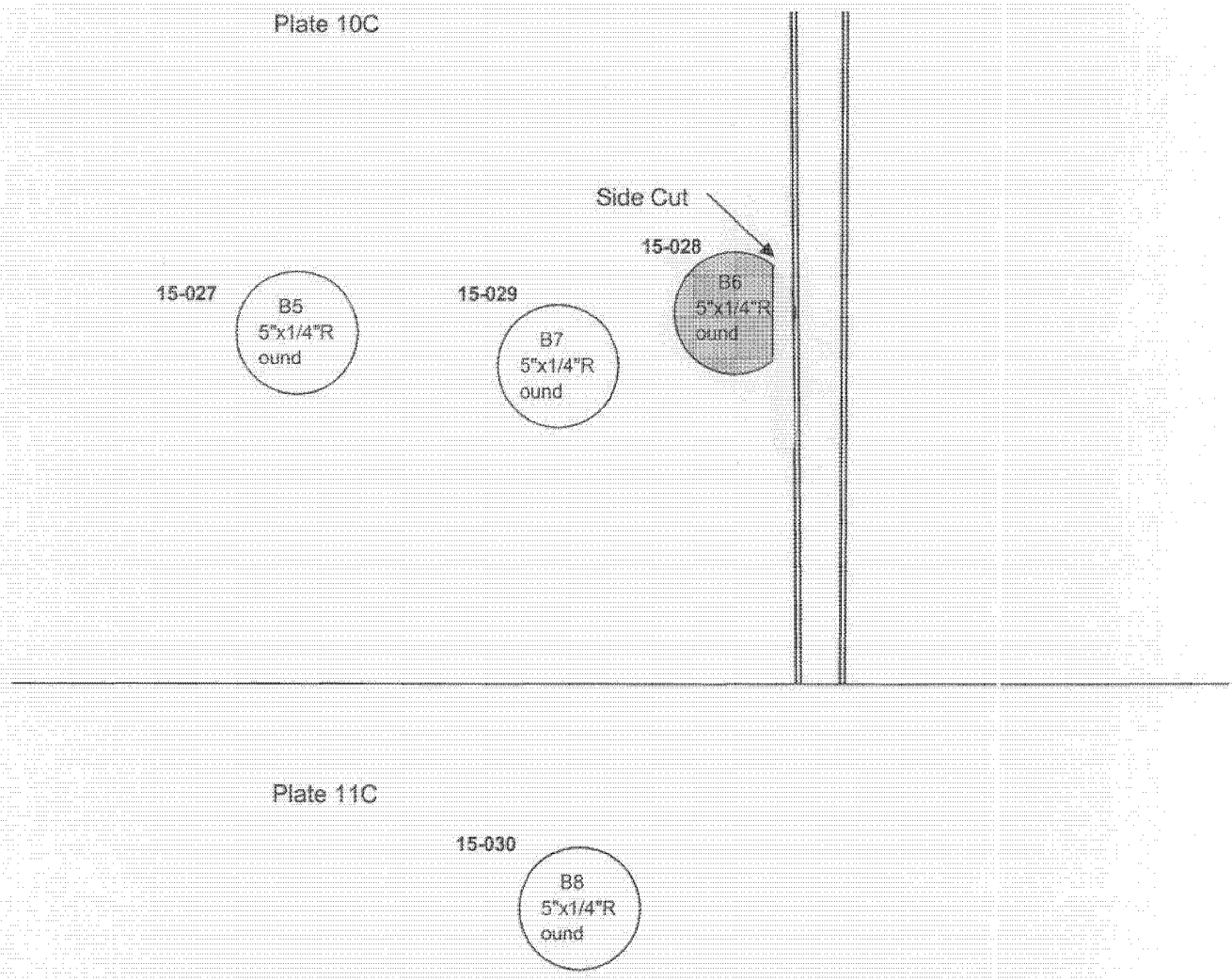

Consolidated Construction Projects For FISC, Pearl Harbor, Hawaii
Contract No. N62742-C-02-1402
Clean And Repair Tanks 1 And 15, 6 And 16
Weld Repair As Built Record

Tank 15
Quadrant B
Extension Course Row 2
Plates 12C and 14C
Reference TESTEX Report 2-18-2005 Page 17 Figures 17 & 18
Repair # 15-031 to 15-035, Flaw No. B9-B13

Plate 12C

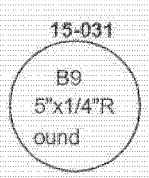

Plate 14C

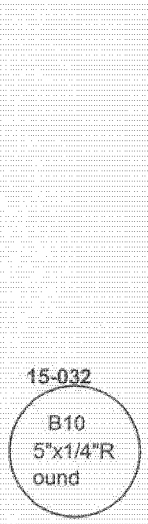

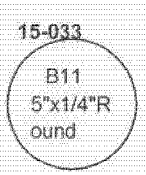

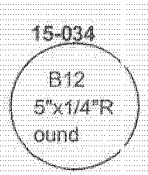

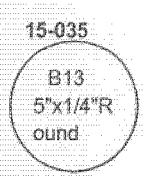

Consolidated Construction Projects For FISC, Pearl Harbor, Hawaii
Contract No. N62742-C-02-1402
Clean And Repair Tanks 1 And 15, 6 And 16
Weld Repair As Built Record

Tank 15
Quadrant B
Extension Course Row 2
Plates 17C and 19C
Reference TESTEX Report 2-18-2005 Page 18 Figures 19 & 20
Repair # 15-036 to 15-039, Flaw No. B14-B19
Plate Modified Due To Field Conditions

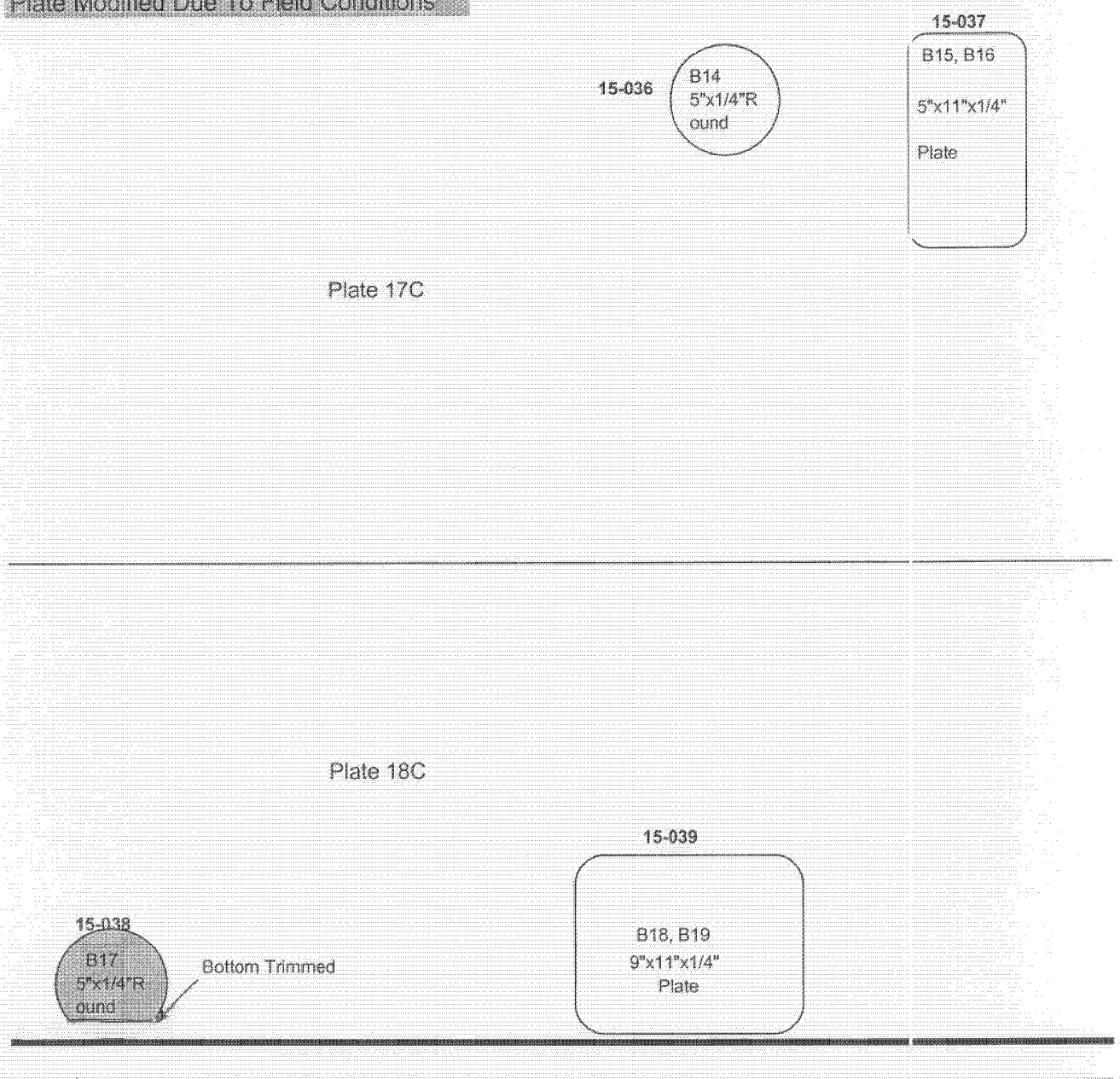

Consolidated Construction Projects For FISC, Pearl Harbor, Hawaii
Contract No. N62742-C-02-1402
Clean And Repair Tanks 1 And 15, 6 And 16
Weld Repair As Built Record

Tank 15
Quadrant B
Extension Course Row 2
Plate 19C
Reference TESTEX Report 2-18-2005 Page 19 Figure 21
Repair # 15-040 to 15-041, Flaw No. B20-B25

Plate 19C

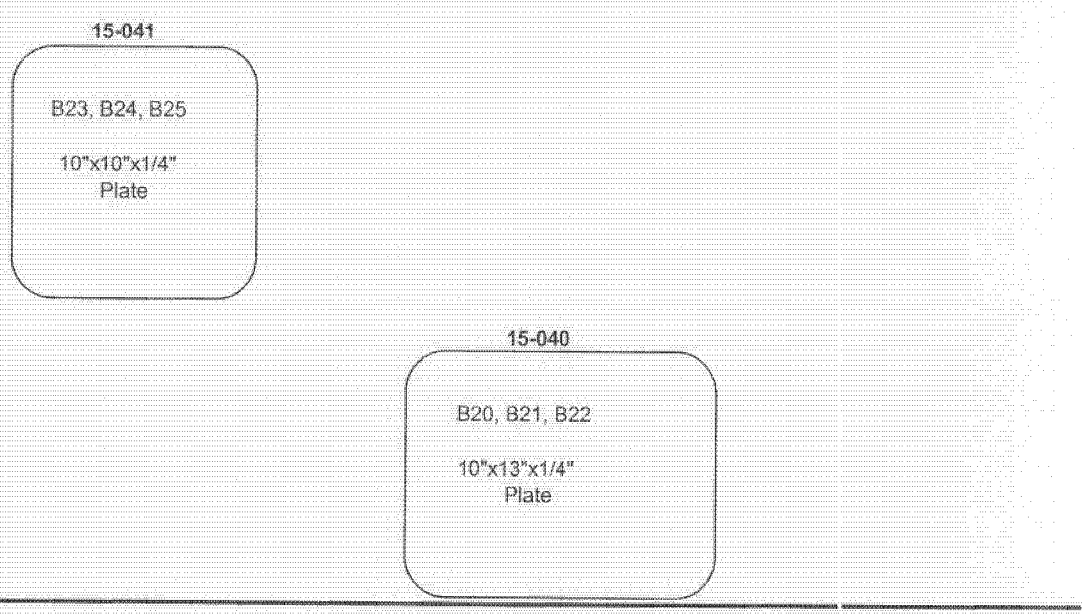

Consolidated Construction Projects For FISC, Pearl Harbor, Hawaii
Contract No. N62742-C-02-1402
Clean And Repair Tanks 1 And 15, 6 And 16
Weld Repair As Built Record

Tank 15
Quadrant B
Extension Course Row 3
Plate 5
Reference TESTEX Report 2-18-2005 Page 20 Figure 22
Repair # 15-042 to 15-046, Flaw No. B26-B33

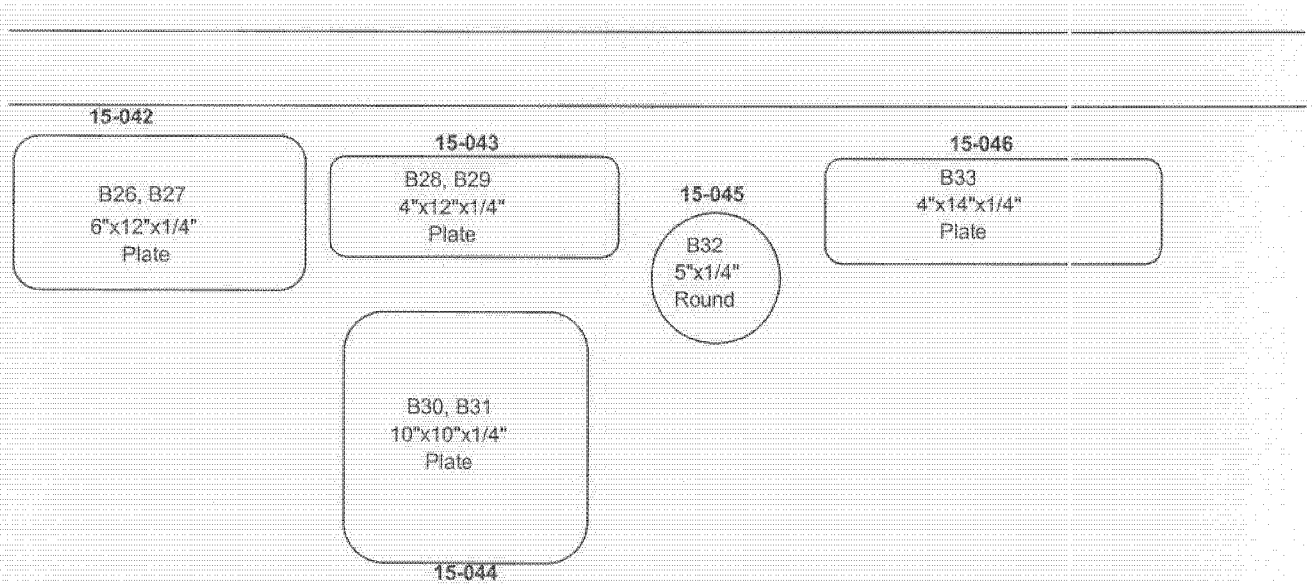

Plate 5

Consolidated Construction Projects For FISC, Pearl Harbor, Hawaii
Contract No. N62742-C-02-1402
Clean And Repair Tanks 1 And 15, 6 And 16
Weld Repair As Built Record

Tank 15
Quadrant B
Extension Course Row 3
Plate 8
Reference TESTEX Report 2-18-2005 Page 20 Figure 23
Repair # 15-047 to 15-049, Flaw No. B34-B37
Modified Due To Field Conditions

Plate 8

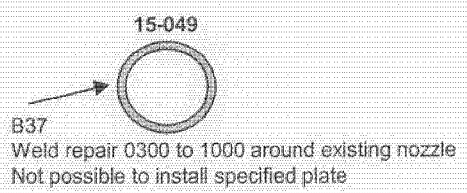

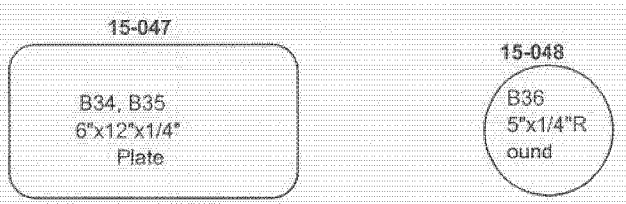

Consolidated Construction Projects For FISC, Pearl Harbor, Hawaii
Contract No. N62742-C-02-1402
Clean And Repair Tanks 1 And 15, 6 And 16
Weld Repair As Built Record

Tank 15
Quadrant B
Extension Course Row 4 Stiffener Plate
Above Vertical Scan 3
Reference TESTEX Report 2-18-2005 Page 21 Figure 24
Repair # 15-050, Flaw No. B38

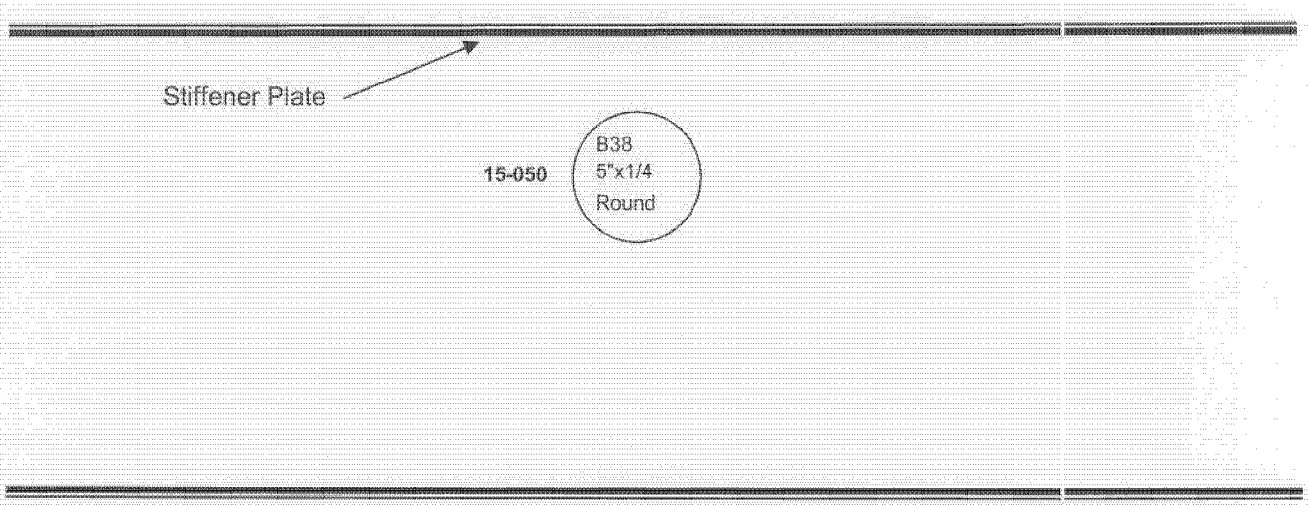

Consolidated Construction Projects For FISC, Pearl Harbor, Hawaii
Contract No. N62742-C-02-1402
Clean And Repair Tanks 1 And 15, 6 And 16
Weld Repair As Built Record

Tank 15
Quadrant D
Barrel Row 23
Vertical Scan 5
Reference TESTEX Report 2-18-2005 Page 24 Figure 27
Repair # 15-051, Flaw No. D1
Modified Due To Field Conditions

Row 23

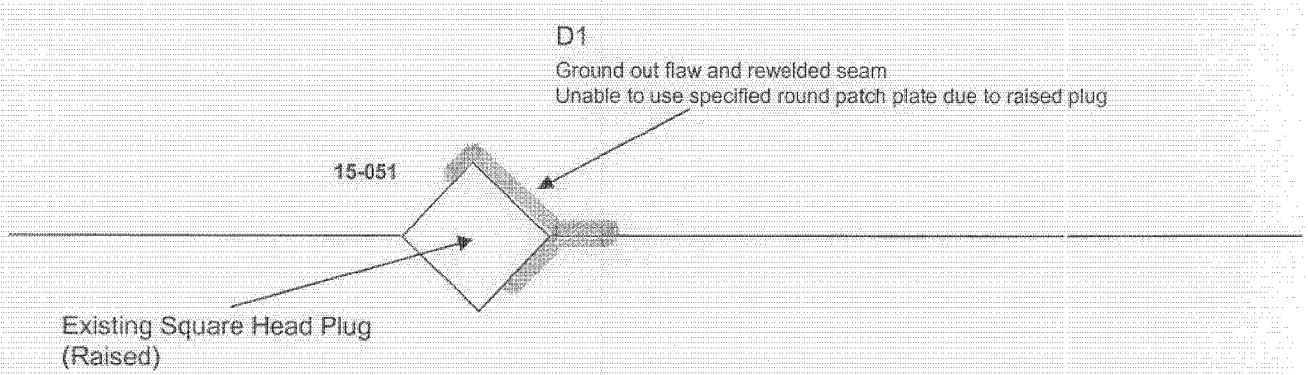

Row 24

Consolidated Construction Projects For FISC, Pearl Harbor, Hawaii
Contract No. N62742-C-02-1402
Clean And Repair Tanks 1 And 15, 6 And 16
Weld Repair As Built Record

Tank 15
Quadrant D
Barrel Row 28
Plate 6
Reference TESTEX Report 2-18-2005 Page 25 Figure 28
Repair # 15-052, Flaw No. D2

Plate 6

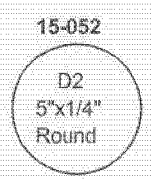

Consolidated Construction Projects For FISC, Pearl Harbor, Hawaii
Contract No. N62742-C-02-1402
Clean And Repair Tanks 1 And 15, 6 And 16
Weld Repair As Built Record

Tank 15
Quadrants A, B, C, & D
Lower Dome and Bottom

Reference TESTEX Report 2-18-2005 Page 7 Figure 4
Repair # 15-053 to 15-073, Flaw No. As Indicated

Location	Repair #	Repair Flaw No.	Description	Specified Repair	As Built Repair
Floor Plate 2	**15-053**	1	Plate Thinning	4"x1/4" round patch plate	5"x1/4" round patch plate
Floor Plate 3	**15-054**	1	Weld Defect	Remove and reweld - defect < 2"	Reweld approximately 5"
Floor Plate 3	**15-055**	2	Weld Defect	Remove and reweld - defect < 2"	Reweld approximately 6"
Floor Plate 4	**15-056**	3	Weld Defect	Remove and reweld - defect < 2"	Reweld approximately 4"
Lower Dome Course 1					
Plate 2	**15-057**	1	Weld Defect	Remove and reweld - defect < 2"	Reweld approximately 5"
Plate 6	**15-058**	2	Weld Defect	Remove and reweld - defect < 2"	Reweld approximately 4"
Plate 7	**15-059**	3	Weld Defect	Remove and reweld - defect < 2"	Reweld approximately 4"
Plate 7	**15-060**	4	Weld Defect	Remove and reweld - defect < 2"	Reweld approximately 6"
Plate 14	**15-061**	5	Weld Defect	Remove and reweld - defect < 2"	Reweld approximately 5"
Plate 20	**15-062**	6	Weld Defect	Remove and reweld - defect < 2"	Reweld approximately 7"
Plate 23	**15-063**	7	Weld Defect	Remove and reweld - defect < 2"	Reweld approximately 6"
Plate 23	**15-064**	8	Weld Defect	Remove and reweld - defect < 2"	Reweld approximately 2"
Plate 24	**15-065**	9	Weld Defect	Remove and reweld - defect < 2"	Reweld approximately 5"
Plate 24	**15-066**	10	Weld Defect	Remove and reweld - defect < 2"	Reweld approximately 6"
Plate 25	**15-067**	11	Weld Defect	Remove and reweld - defect < 2"	Reweld approximately 4"
Plate 26	**15-068**	12	Weld Defect	Remove and reweld - defect < 2"	Reweld approximately 3"
Plate 28/29	**15-069**	13	Weld Defect	Remove and reweld - defect < 2"	Reweld approximately 4"
Plate 32	**15-070**	14	Weld Defect	Remove and reweld - defect < 2"	Reweld approximately 5"
Plate 35	**15-071**	15	Weld Defect	Remove and reweld - defect < 2"	Reweld approximately 6"
Plate 43/44	**15-072**	16	Weld Defect	Remove and reweld - defect < 2"	Reweld approximately 6"
Plate 44	**15-073**	17	Weld Defect	Remove and reweld - defect < 2"	Reweld approximately 4"

Each repair includes 2 Inert holes that were plugged, seal welded, and tested after repair work was completed. Repair 15-056 inert holes were repaired with 5" diameter round plates. Repairs 15-064 and 15-065 had common inert holes.

3.0 Tank Maps
Thermal Engineering Corp.
Honolulu, HI
Tank #15 - Quadrant A - Section

TesTex
WWW.TESTEX-NDT.COM

TANK #15 - QUADRANT A - SECTION

Figure 5:

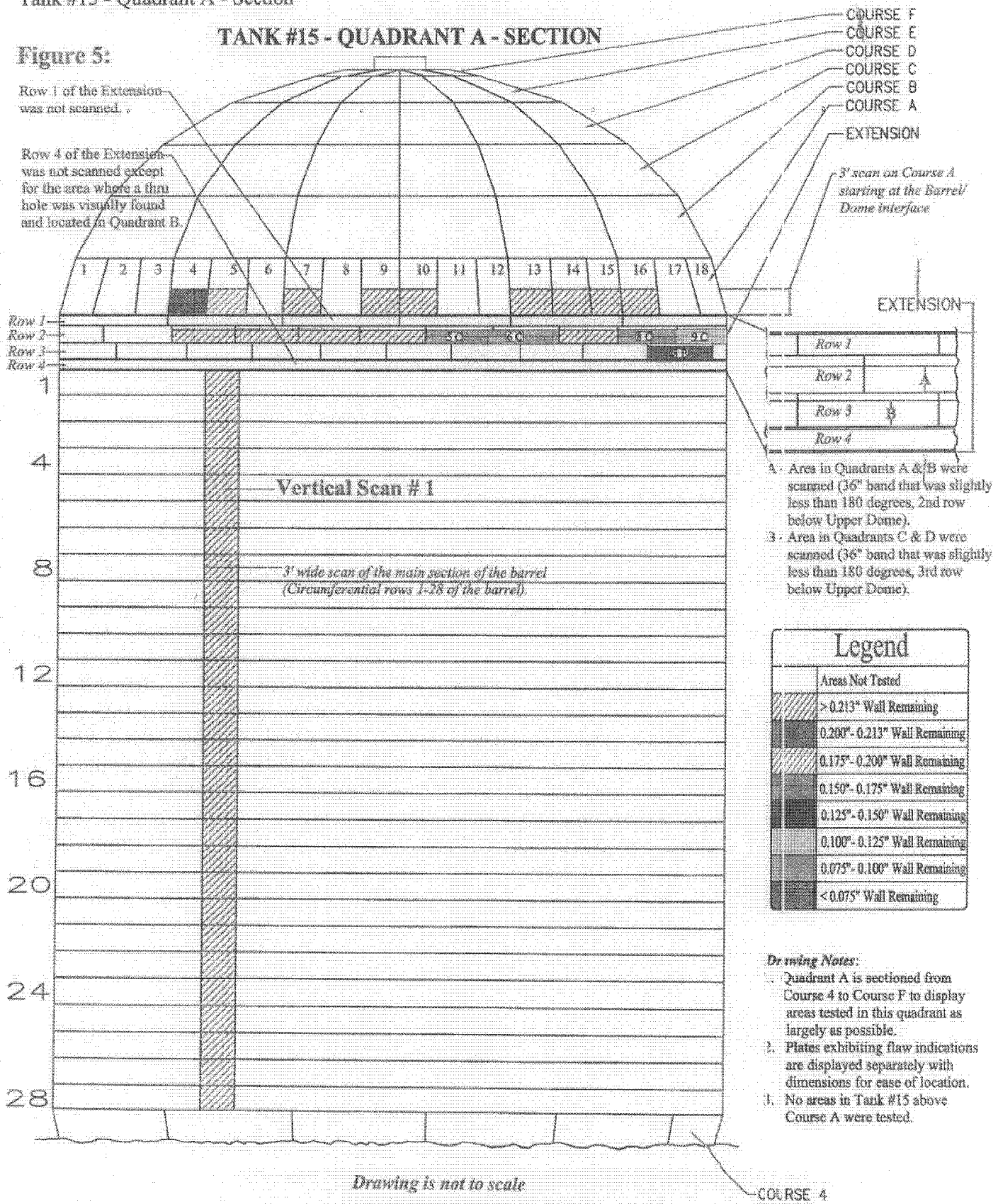

A - Area in Quadrants A & B were scanned (36" band that was slightly less than 180 degrees, 2nd row below Upper Dome).
B - Area in Quadrants C & D were scanned (36" band that was slightly less than 180 degrees, 3rd row below Upper Dome).

Legend	
	Areas Not Tested
	> 0.213" Wall Remaining
	0.200" - 0.213" Wall Remaining
	0.175" - 0.200" Wall Remaining
	0.150" - 0.175" Wall Remaining
	0.125" - 0.150" Wall Remaining
	0.100" - 0.125" Wall Remaining
	0.075" - 0.100" Wall Remaining
	< 0.075" Wall Remaining

Drawing Notes:
1. Quadrant A is sectioned from Course 4 to Course F to display areas tested in this quadrant as largely as possible.
2. Plates exhibiting flaw indications are displayed separately with dimensions for ease of location.
3. No areas in Tank #15 above Course A were tested.

Drawing is not to scale

3.0 Tank Maps
Thermal Engineering Corp.
Honolulu, HI
Tank #15 - Quadrant B - Section

TesTex
WWW.TESTEX-NDT.COM

TANK #15 - QUADRANT B - SECTION

Figure 13:

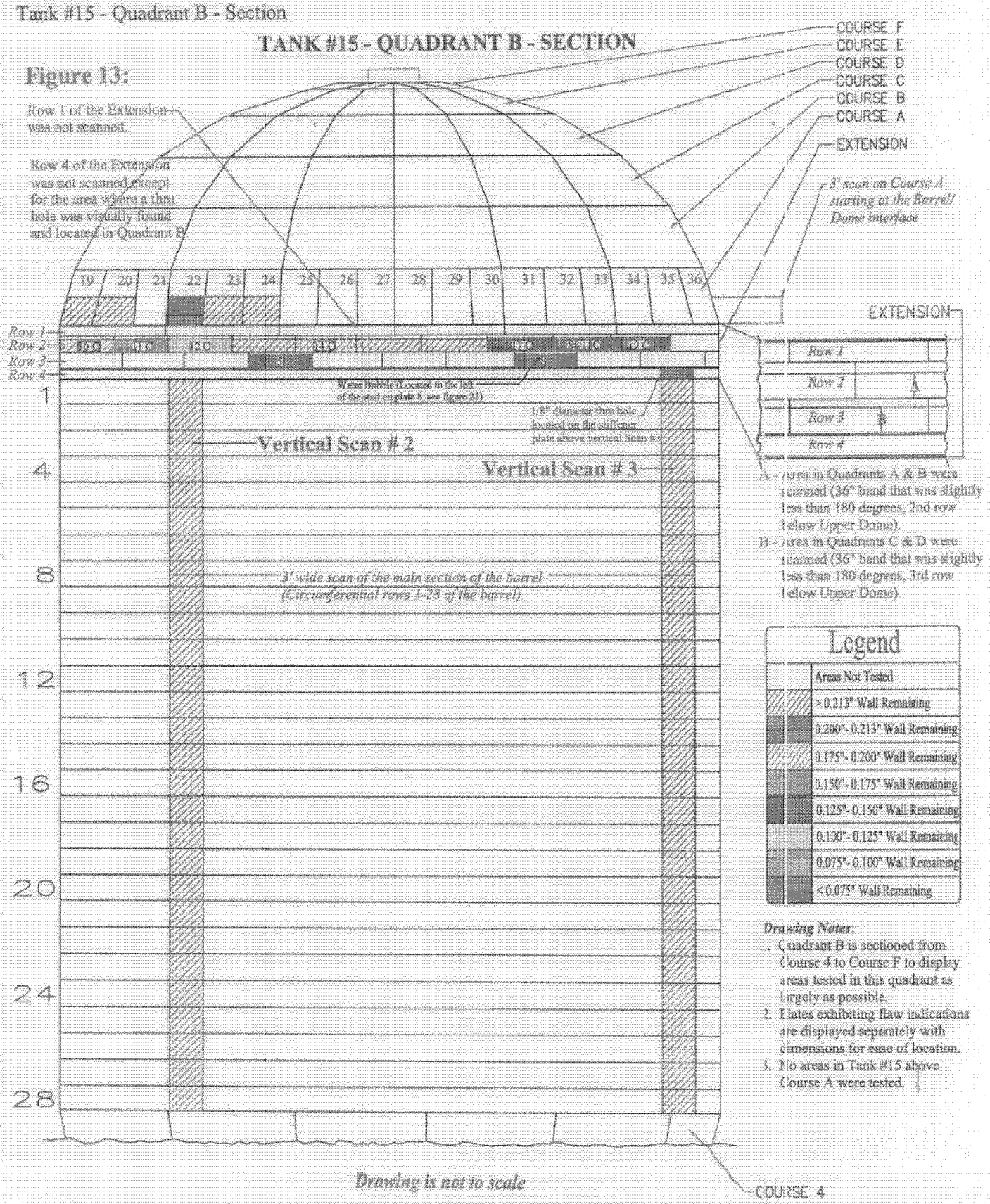

A - Area in Quadrants A & B were scanned (36" band that was slightly less than 180 degrees, 2nd row below Upper Dome).
B - Area in Quadrants C & D were scanned (36" band that was slightly less than 180 degrees, 3rd row below Upper Dome).

Legend	
	Areas Not Tested
	> 0.213" Wall Remaining
	0.200"- 0.213" Wall Remaining
	0.175"- 0.200" Wall Remaining
	0.150"- 0.175" Wall Remaining
	0.125"- 0.150" Wall Remaining
	0.100"- 0.125" Wall Remaining
	0.075"- 0.100" Wall Remaining
	< 0.075" Wall Remaining

Drawing Notes:
1. Quadrant B is sectioned from Course 4 to Course F to display areas tested in this quadrant as largely as possible.
2. Plates exhibiting flaw indications are displayed separately with dimensions for ease of location.
3. No areas in Tank #15 above Course A were tested.

Drawing is not to scale

TesTex
WWW.TESTEX-NDT.COM

TANK #15 - QUADRANT D - SECTION

Figure 26:

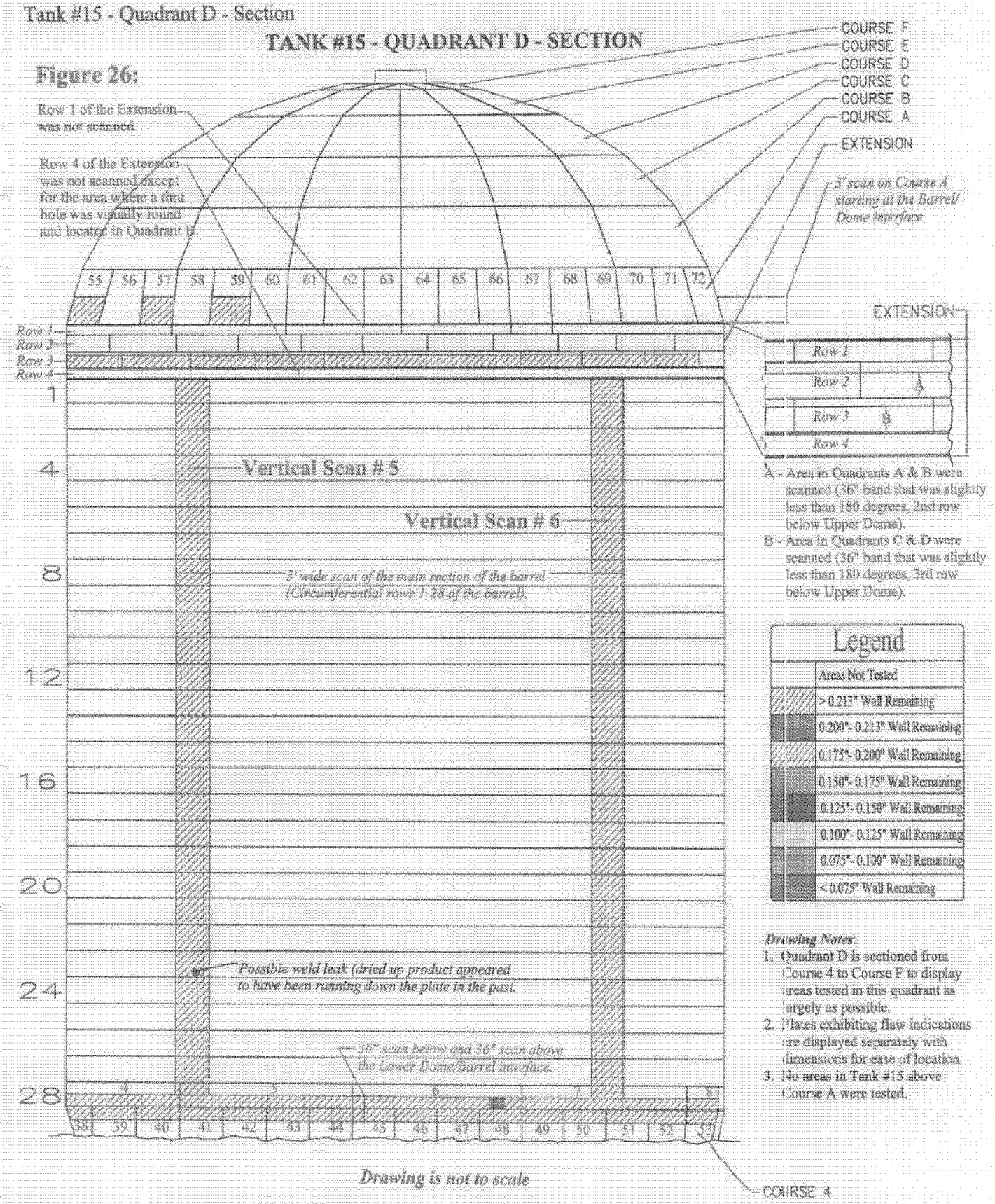

3.0 Tank Maps
Thermal Engineering Corp.
Honolulu, HI
Tank #15 - Lower Dome Flaw Locations

TANK #15 - LOWER DOME FLAW LOCATIONS

Figure 4:

Flaw locations for Lower Dome (Note: All flaws on the lower dome were concentrated either on the tank floor or Course 1).

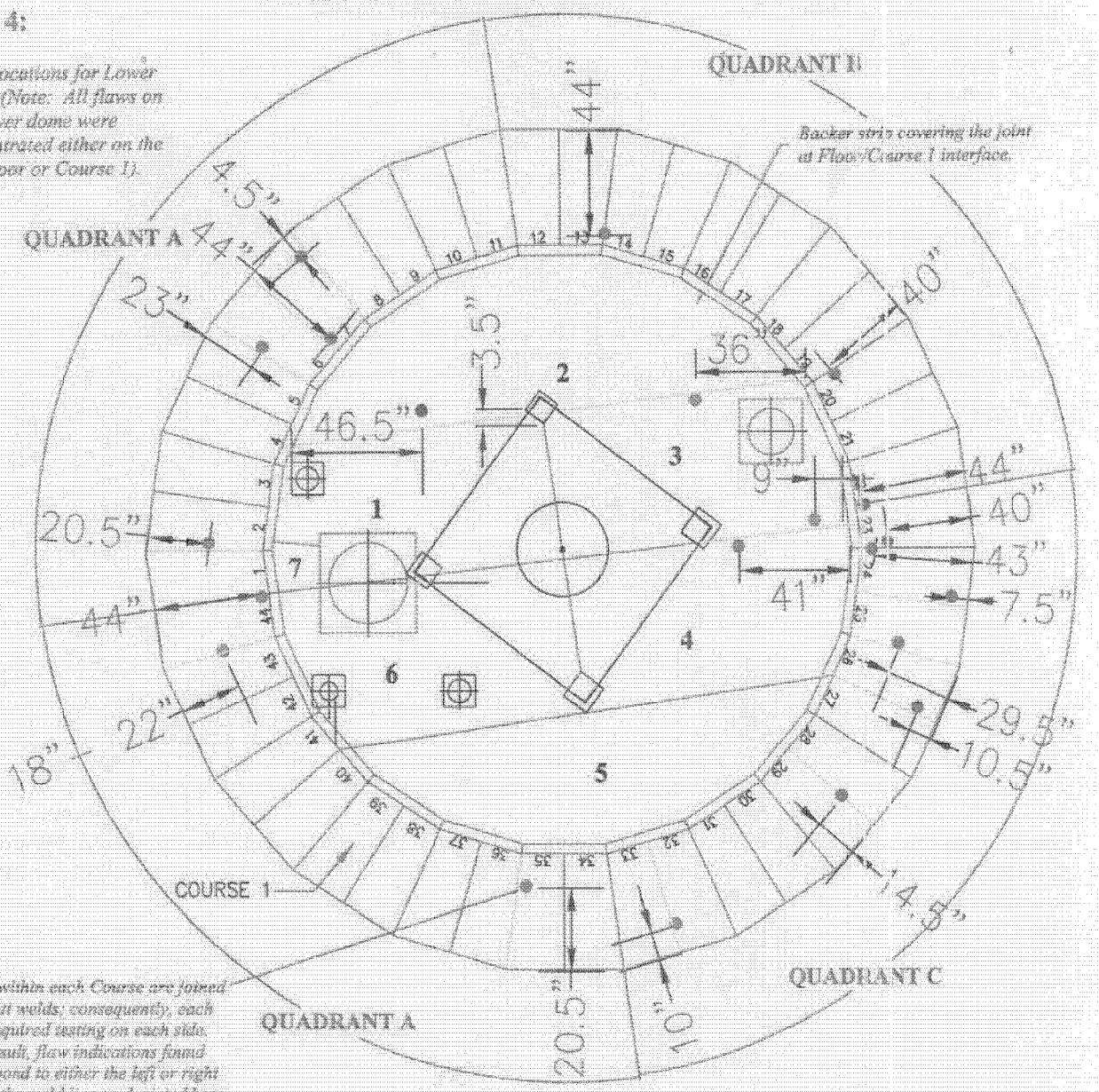

Plates within each Course are joined with butt welds; consequently, each weld required testing on each side. As a result, flaw indications found correspond to either the left or right side of the weld line as depicted here.

Drawing Notes:

1. Tank #15 is divided into 4 quadrants (A-D).
2. Course 1 is comprised of 44 total plates.
3. Quadrant A is comprised of 11 plates (1-11).
4. Quadrant B is comprised of 11 plates (12-22).
5. Quadrant C is comprised of 11 plates (23-33).
6. Quadrant D is comprised of 11 plates (34-44).
7. This numbering convention begins with plate #1 being the first plate of quadrant A according to plant personnel.

Legend	
	Welds that were not tested
	Welds that were tested but did not exhibit flaw indications
	Welds that were tested and exhibited flaw indications
	Welds that were tested and found to be leakers
	Welds that exhibited flaw indications by TesTex
	Topside Corrosion Cell Indication found by TesTex
	Leaks found by Jurva and verified by TesTex

Drawing is not to scale

TANK #15 - QUADRANT A FLAWS 1-6

Course A - Upper Dome

Plate #4

Figure 6:

Thickness:
1 - 0.156"
2 - 0.098"
3 - 0.146"
4 - Thru-hole
5 - 0.119"

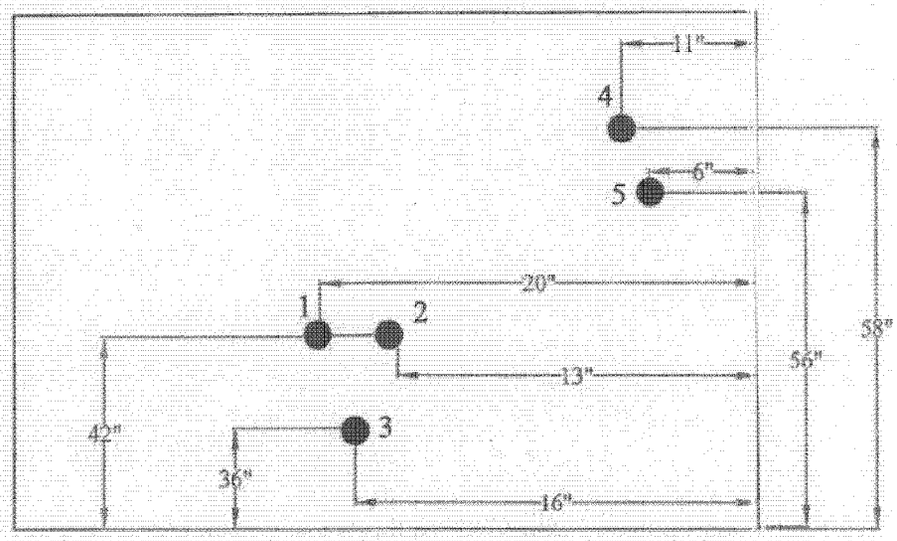

Plate #5

Figure 7:

Thickness:
1 - 0.188"

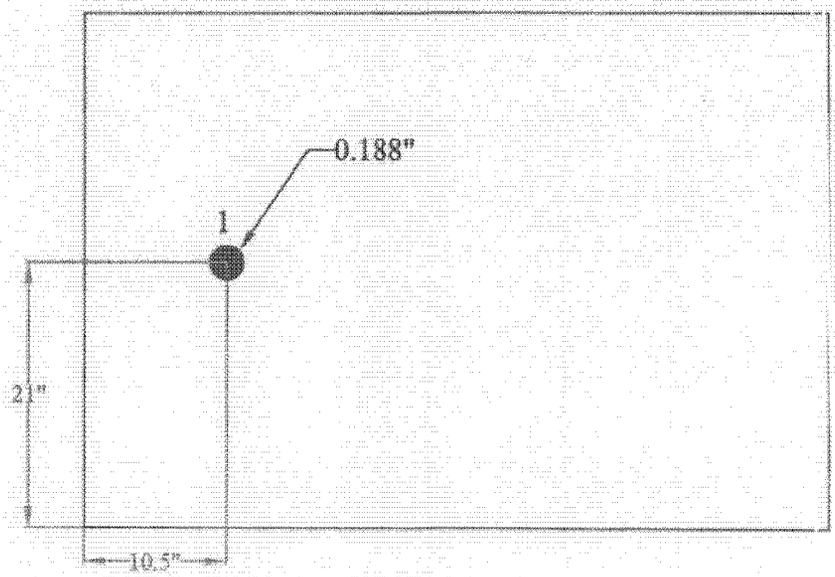

Drawing is not to scale

TANK #15 - QUADRANT A FLAWS 7-21

Upper Barrel between Dome & Stiffening Ring (Row 2 below Upper Dome on Barrel)

Figure 8:

Plate # 6C

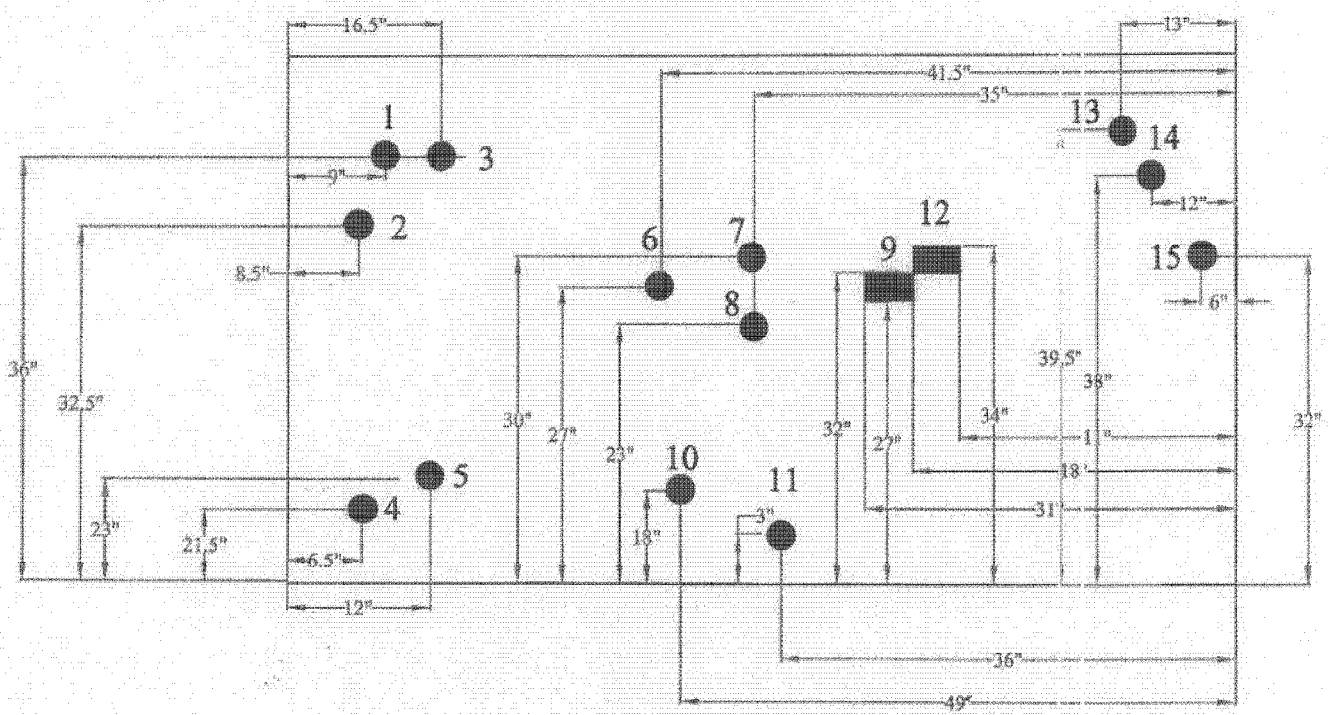

Thickness:

1 - 0.178"	6 - 0.101"	11 - 0.175"
2 - 0.209"	7 - 0.154"	12 - 0.150"
3 - 0.177"	8 - 0.216"	13 - 0.191"
4 - 0.165"	9 - 0.140"	14 - 0.088"
5 - 0.155"	10 - 0.152"	15 - 0.188"

Drawing is not to scale

TANK #15 - QUADRANT A FLAWS 22-25

Upper Barrel between Dome & Stiffening Ring (Row 2 below Upper Dome on Barrel)

Figure 9:

Plate # 5C

Thickness:
1 - 0.159"
2 - Gouge
3 - Dent & Gouge

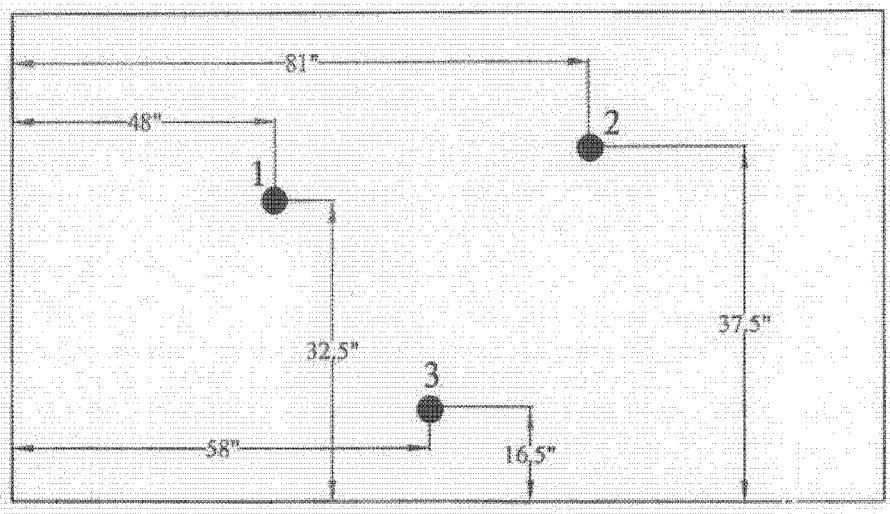

Plate # 8C

Figure 10:

Thickness:
1 - 0.166"

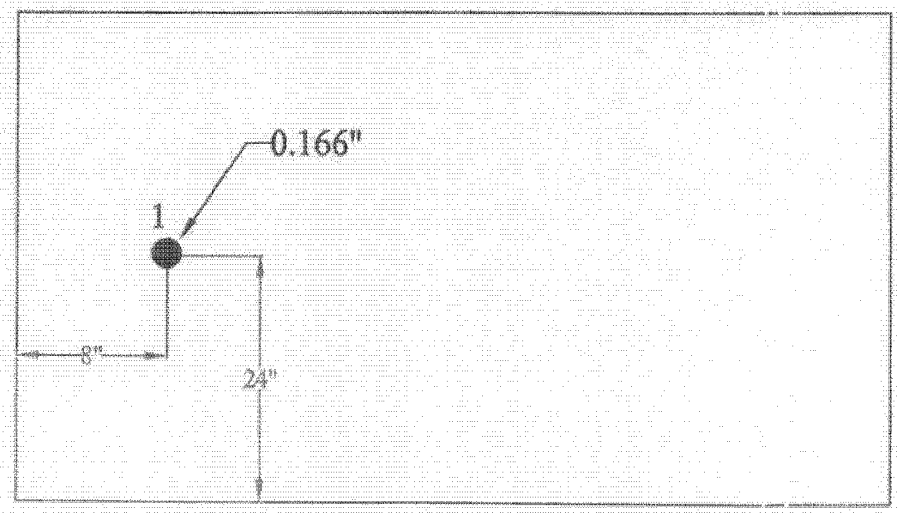

Drawing is not to scale

TANK #15 - QUADRANT A FLAWS 26-27

Upper Barrel between Dome & Stiffining Ring (Row 2 below Upper Dome on Barrel)

Plate # 9C

Figure 11:

Thickness:
1 - 0.119"
2 - 0.150"

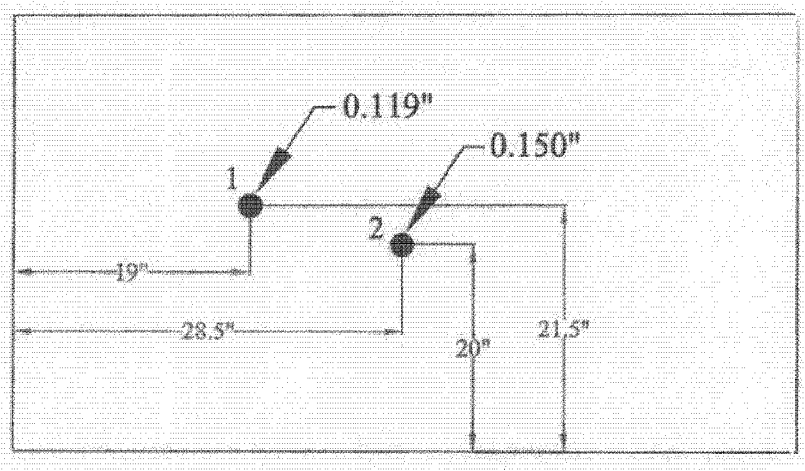

Drawing is not to scale

TANK #15 - QUADRANT A FLAW 28

Upper Barrel between Dome & Stiffining Ring (Row 3 below Upper Dome on Barrel)

Plate # 8B

Figure 12:

Thickness:
1 - Thru-hole

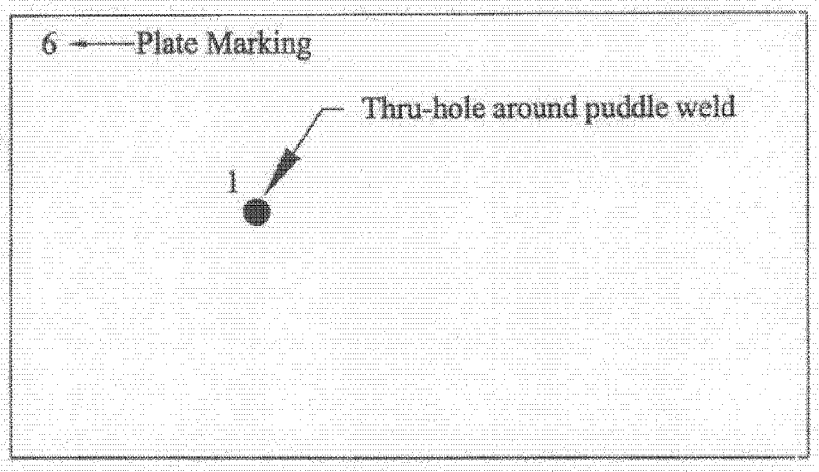

Drawing is not to scale

TANK #15 - QUADRANT B FLAWS 1-4

Course A - Upper Dome

Figure 14:

Plate # 22

Thickness:
1 - 0.090"
2 - Thru-hole
3 - 0.196"
4 - 0.183"

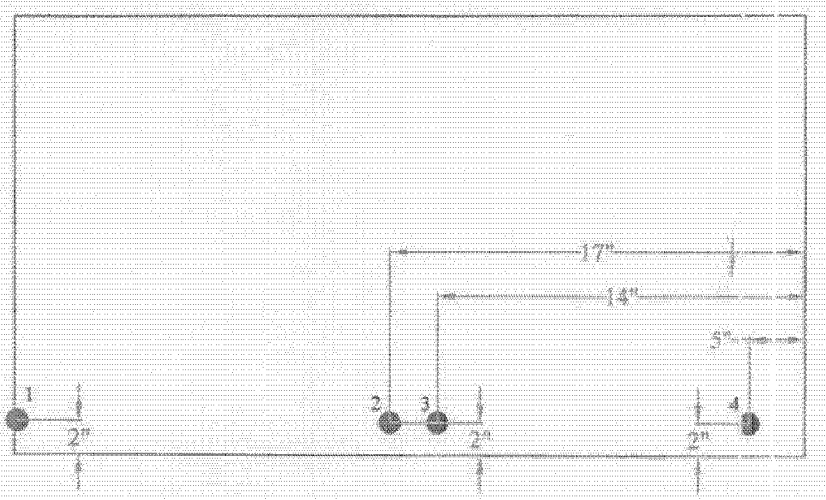

Drawing is not to scale

TANK #15 - QUADRANT B FLAWS 5-8

Upper Barrel between Dome & Stiffening Ring (Row 2 below Upper Dome on Barrel)

Plate # 10C

Figure 15:

Thickness:
1 - 0.188"
2 - 0.201"
3 - 0.195"

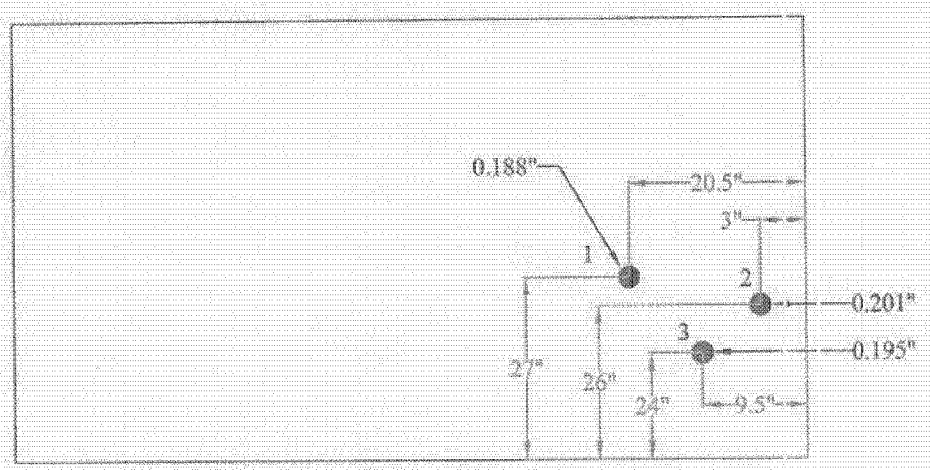

Plate # 11C

Figure 16:

Thickness:
1 - 0.150"

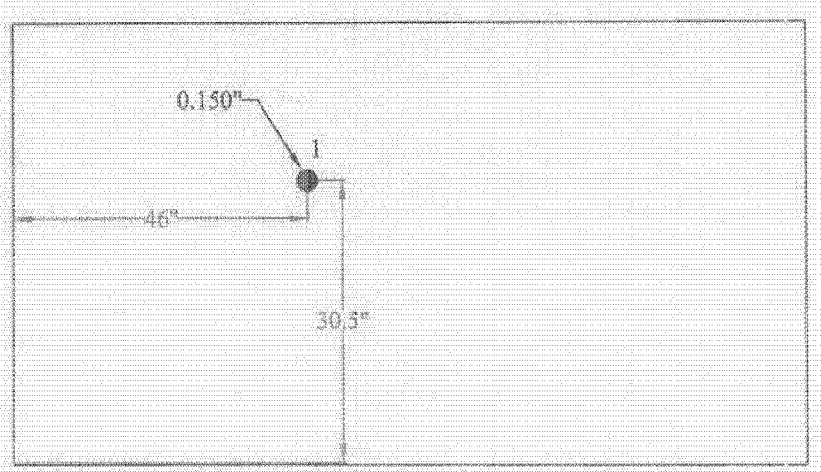

Drawing is not to scale

TANK #15 - QUADRANT B FLAWS 9-13

Upper Barrel between Dome & Stiffening Ring (Row 2 below Upper dome on Barrel)

Plate # 12C

Figure 17:

Thickness:
1 - 0.109"

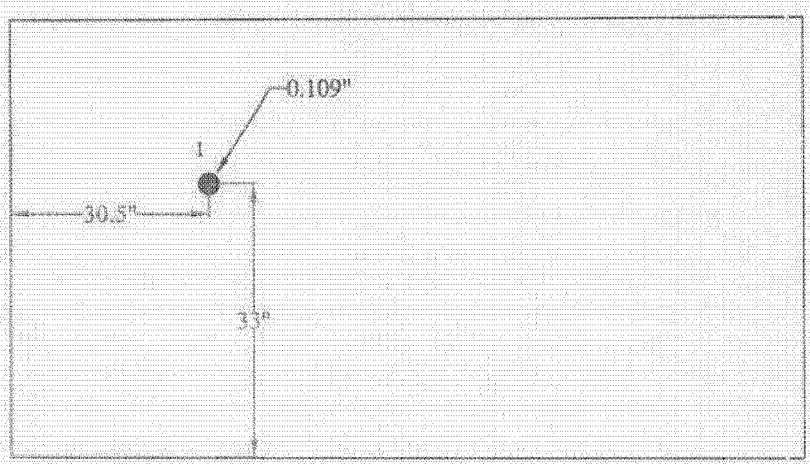

Plate # 14C

Figure 18:

Thickness:
1 - 0.199"
2 - 0.175"
3 - 0.186"
4 - 0.177"

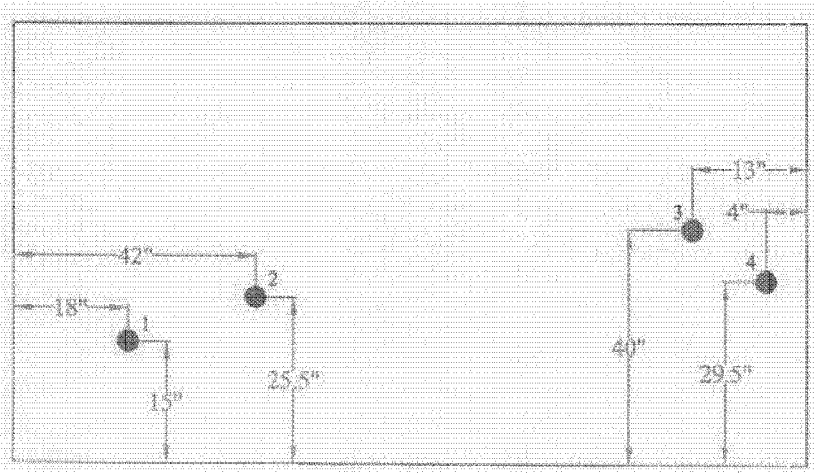

Drawing is not to scale

TANK #15 - QUADRANT B FLAWS 14-19

Upper Barrel between Dome & Stiffening Ring (Row 2 below Upper dome on Barrel)

Plate # 17C

Figure 19:

Thickness:
1 - 0.145"
2 - 0.180"
3 - 0.150"

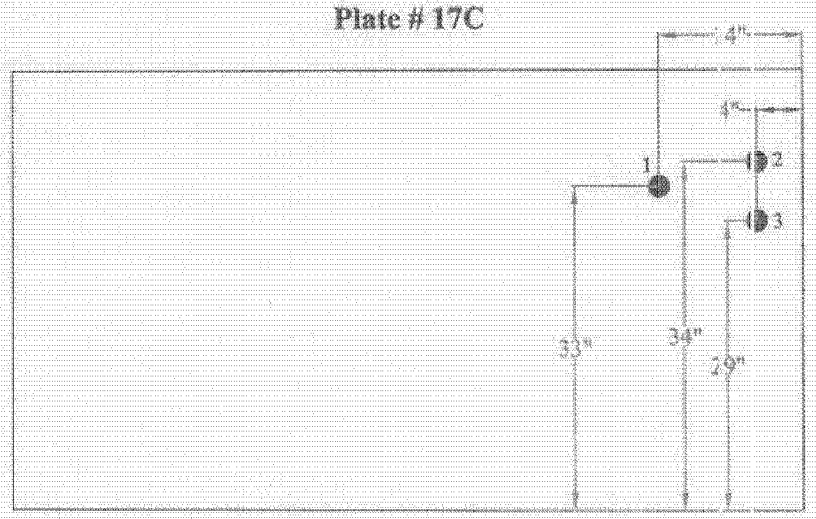

Plate # 88/18C

Figure 20:

Thickness:
1 - 0.150"
2 - 0.139"
3 - Thru-hole

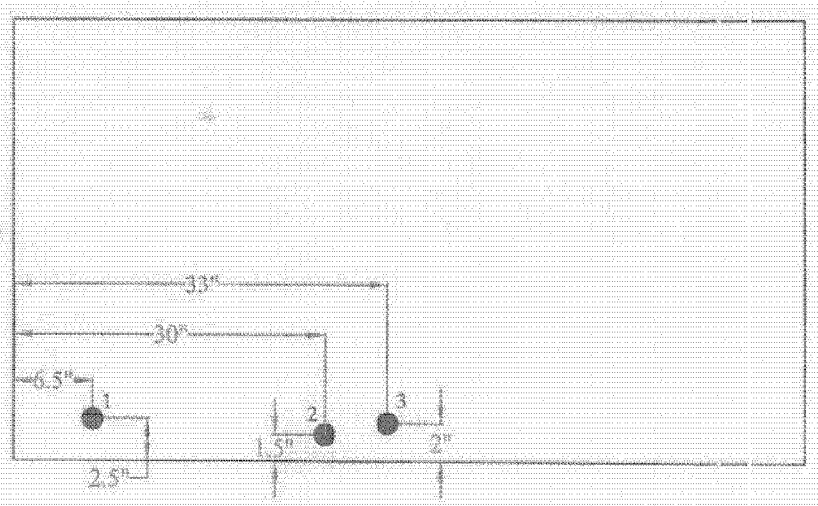

Drawing is not to scale

TANK #15 - QUADRANT B FLAWS 20-25

Upper Barrel between Dome & Stiffening Ring (Row 2 below Upper dome on Barrel)

Plate # 19C

Figure 21:

Thickness:
1 - 0.220"
2 - Thru-hole
3 - 0.230"
4 - 0.108"
5 - 0.133"
6 - 0.157"

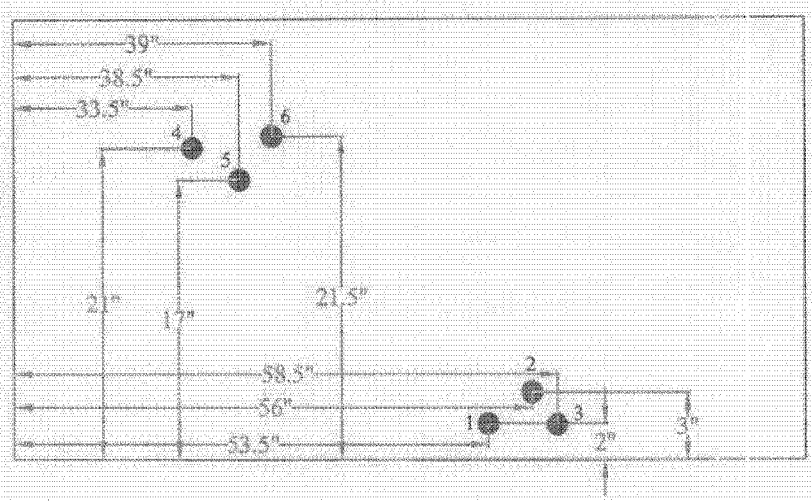

Drawing is not to scale

TANK #15 - QUADRANT B FLAWS 26-37

Upper Barrel between Dome & Stiffening Ring (Row 3 below Upper dome on Barrel)

Plate #5

Figure 22:

Thickness:
1 - 0.200"
2 - 0.193"
3 - Thru-hole
4 - 0.160"
5 - 0.161"
6 - 0.120"
7 - Thru-hole
8 - 0.150"

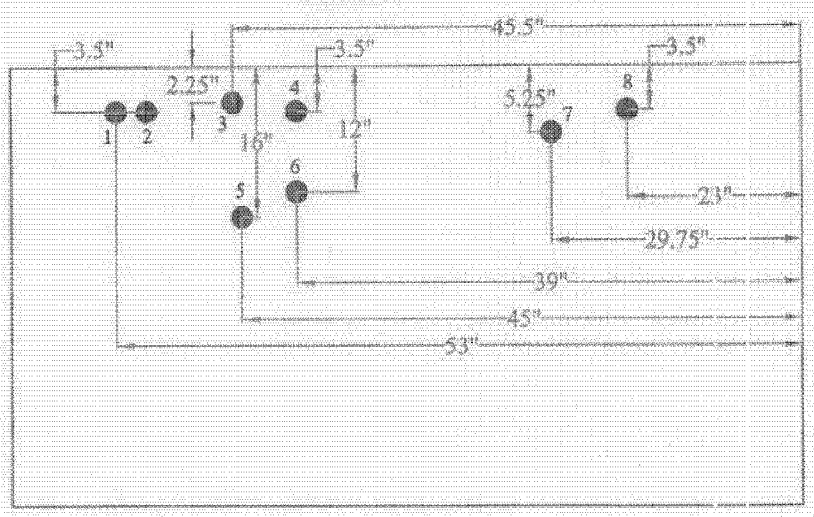

Plate # 8

Figure 23:

Thickness:
1 - Thru-hole
2 - 0.150"
3 - Thru-hole
4 - Water Bubble

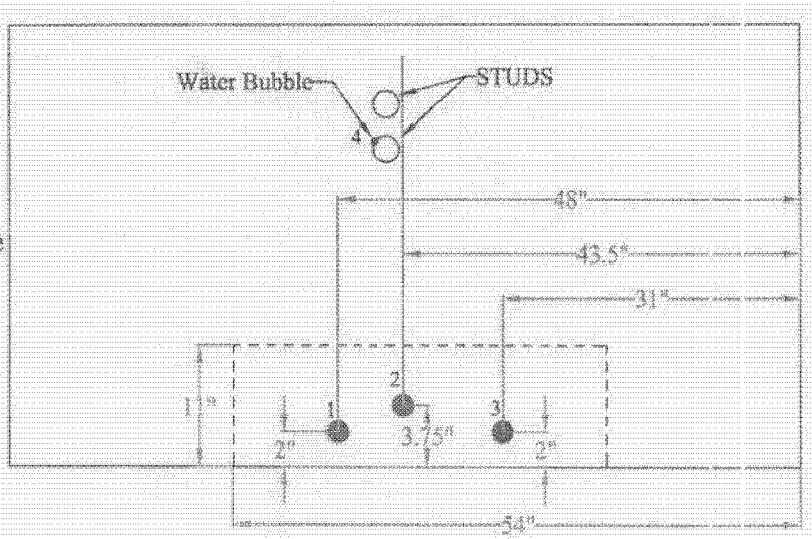

Drawing is not to scale

TANK #15 - QUADRANT B FLAW 38

Stiffener Plate above Vertical Scan #3

Stiffener Plate

Figure 24:

Thickness:
1 - Thru-hole

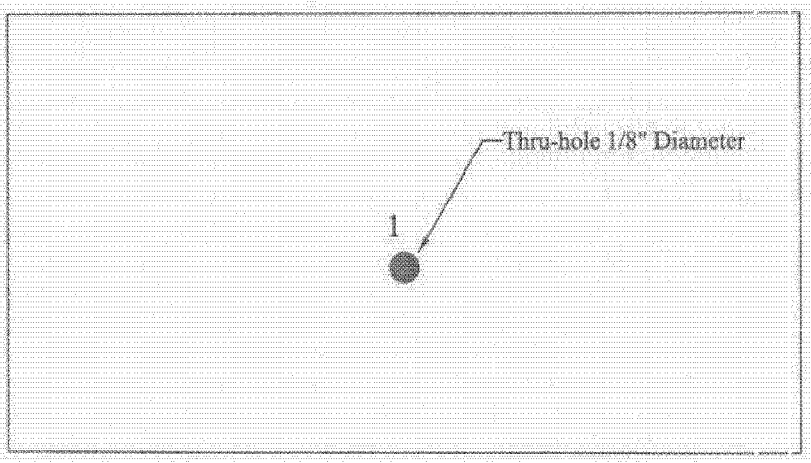

Drawing is not to scale

TANK #15 - QUADRANT D FLAW 1

Vertical Scan #5

Plate in Row 23 of the Barrel in Vertical Scan #5

Figure 27:

Thickness:
1 - Possible Leak

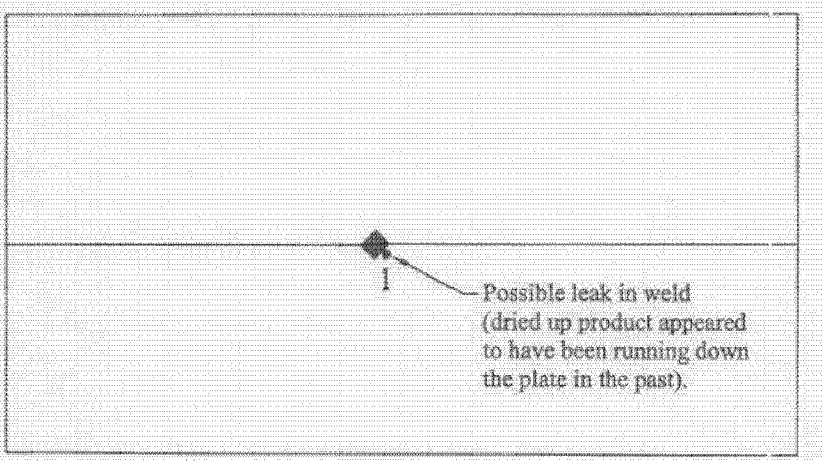

Drawing is not to scale

TANK #15 - QUADRANT D FLAW 2

Row 28 of Barrel

Figure 28:

Thickness:
1 - Thru-hole

Plate #6

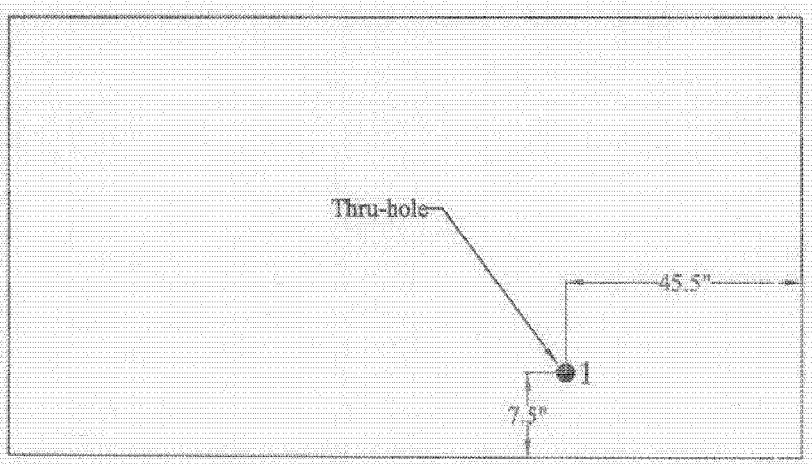

Drawing is not to scale

Quadrant A Upper Dome Repairs					
Plate No.	Testex Flaw No.	Repair Flaw No.	Wall / Plate Remaining	Approximate Corrosion Area (Total Affected Area)	Patch Plate Size/Thickness
4	1	A-1	0.156"	0.876" Diameter	Cover A1 and A2 using a 4" x 14" x 1/4" Rectangular Patch Plate
4	2	A-2	0.098"	1.750" Diameter	
4	3	A-3	0.146"	0.876 Diameter	4" x 1/4" Round Patch Plate
4	4	A-4	Thru-hole	1.750" Diameter	Cover A4 and A5 using a 10" x 12" x 1/4" Rectangular Patch Plate
4	5	A-5	0.119"	Undetermined	
5	1	A-6	0.188"	1.312" Diameter	4" x 1/4" Round Patch Plate
5C	1	A-7	Topside Gouge	-	4" x 1/4" Round Patch Plate
5C	2	A-8	.159"	1.312" Diameter	4" x 1/4" Round Patch Plate
5C	3	A-9	Topside dent & Gouge	-	4" x 1/4" Round Patch Plate
6C	1	A-10	.178"	0.438" Diameter	Cover A10 and A11 using a 4" x 10" x 1/4" Rectangular Patch Plate
6C	2	A-11	.209"	0.438" Diameter	
6C	3	A-12	.177"	0.656" Diameter	4" x 1/4" Round Patch Plate
6C	4	A-13	.165"	0.656" Diameter	Cover A13 and A14 using a 6" x 10" x 1/4" Rectangular Patch Plate
6C	5	A-14	.155"	1.312" Diameter	
6C	6	A-15	.101"	Undetermined	4" x 1/4" Round Patch Plate
6C	7	A-16	.154"	1.750" Diameter	Cover A16 and A17 using a 5" x 11" x 1/4" Rectangular Patch Plate
6C	8	A-17	.216"	0.876" Diameter	
6C	9	A-18	Average 0.140"	5" X 13" Area	Cover A18 and A21 using a 12" x 24" x 1/4" Rectangular Patch Plate
6C	10	A-21	Average 0.150"	2" X 7" Area	
6C	11	A-19	.152"	0.876" Diameter	4" x 1/4" Round Patch Plate
6C	12	A-20	.175"	Undetermined	4" x 1/4" Round Patch Plate
6C	13	A-22	.191"	0.438 Diameter	Cover A22 and A23 using a 7" x 7" x 1/4" Square Patch Plate
6C	14	A-23	.088"	0.656" Diameter	
6C	15	A-24	.188"	Undetermined	4" x 1/4" Round Patch Plate
8C	1	A-25	.166"	0.876" Diameter	4" x 1/4" Round Patch Plate
9C	1	A-26	.119"	0.876" Diameter	4" x 1/4" Round Patch Plate
9C	2	A-27	.150"	0.876" Diameter	4" x 1/4" Round Patch Plate
8B (6)	1	A-28	Thru-hole around puddle weld		4" x 1/4" Round Patch Plate

Quadrant B Upper Dome Repairs					
Plate No.	Testex Flaw No.	Repair Flaw No.	Wall / Plate Remaining	Approximate Corrosion Area (Total Affected Area)	Patch Plate Size/Thickness
22	1	B-1	0.090"	Flaw at weld	12" x 12" x 1/4" Square Patch Plate *
22	2	B-2	Thru-hole	1.750" Diameter	10" x 12" x 1/4" Rectangular Patch Plate *
22	3	B-3	0.196"	Undetermined	4" x 1/4" Round Patch Plate
22	4	B-4	0.183"	Undetermined	4" x 1/4" Round Patch Plate
10C	1	B-5	.188"	.876" Diameter	4" x 1/4" Round Patch Plate
10C	2	B-6	.195"	.876" Diameter	4" x 1/4" Round Patch Plate
10C	3	B-7	.201"	.438" Diameter	4" x 1/4" Round Patch Plate
11C	1	B-8	.150"	1.75" Diameter	4" x 1/4" Round Patch Plate
12C	1	B-9	.109"	.876" Diameter	4" x 1/4" Round Patch Plate
14C	1	B-10	.199"	.876" Diameter	4" x 1/4" Round Patch Plate
14C	2	B-11	.175"	1.312" Diameter	4" x 1/4" Round Patch Plate
14C	3	B-12	.186"	.876" Diameter	4" x 1/4" Round Patch Plate
14C	4	B-13	.177"		Field verify extent of corrosion
17C	1	B-14	.145"	.876" Diameter	4" x 1/4" Round Patch Plate
17C	2	B-15	.180"	.876" Diameter	Cover B15 and B16 using a 5" x 11" x 1/4" Rectangular Patch Plate
17C	3	B-16	.150"	1.312" Diameter	
18C	1	B-17	.150"	1.312" Diameter	4" x 1/4" Round Patch Plate
18C	2	B-18	.139"	.876" Diameter	Cover B18 and B19 using a 9" x 11" x 1/4" Rectangular Patch Plate *
18C	3	B-19	Thru-hole	1.312" Diameter	
19C	1	B-20	.220"	.876" Diameter	Cover B20, B21 and B22 using a 10" x 13" x 1/4" Rectangular Patch Plate *
19C	2	B-21	Thru-hole	1.750" Diameter	
19C	3	B-22	.230"	.438" Diameter	
19C	4	B-23	.108"	.656" Diameter	Cover B23, B24 and B25 using a 10" x 10" x 1/4" Square Patch Plate
19C	5	B-24	.133"	.876" Diameter	
19C	6	B-25	0.157	.438" Diameter	

Quadrant B Upper Dome Repairs					
Plate No.	Testex Flaw No.	Repair Flaw No.	Wall / Plate Remaining	Approximate Corrosion Area (Total Affected Area)	Patch Plate Size/Thickness
5	1	B-26	.200"	.438" Diameter	Cover B26 and B27 using a 6" x 12" x 1/4" Rectangular Patch Plate *
5	2	B-27	0.193"	.876" Diameter	
5	3	B-28	Thru-hole	.876" Diameter	4" x 12" x 1/4" Rectangular Patch Plate *
5	4	B-29	.160"	.876" Diameter	4" x 12" x 1/4" Rectangular Patch Plate *
5	5	B-30	.161"	1.750" Diameter	Cover B30 and B31 using a 6" x 12" x 1/4" Rectangular Patch Plate
5	6	B-31	.120"	1.750" Diameter	
5	7	B-32	Thur-hole	Undertermined	Field verify extent of corrosion
5	8	B-33	.150"	.438" Diameter	4" x 12" x 1/4" Rectangular Patch Plate *
8	1	B-34	Thru-hole	Undetermined	Field verify extent of corrosion
8	2	B-35	.150"	Undetermined	4" x 1/4" Round Patch Plate
8	3	B-36	Thru-hole	Undetermined	Field verify extent of corrosion
8	4	B-37	(Water Bubble)	Undetermined	4" x 1/4" Round Patch Plate
Above Vertical Scan #3	1	B-38	Thru-hole	0.125" Diameter	4" x 1/4" Round Patch Plate

Quadrant D Upper Dome Repairs					
Plate No.	Testex Flaw No.	Repair Flaw No.	Wall / Plate Remaining	Approximate Corrosion Area (Total Affected Area)	Patch Plate Size/Thickness
In Vertical Scan #5	1	D-1	Possible leak in weld (dried up product apparent on plate)	-	4" x 1/4" Round Patch Plate
6	1	D-2	Thru-hole	1.250" X 0.625" Eliptical Area	4" x 1/4" Round Patch Plate

Tank Floor Repairs					
Plate No.	Testex Flaw No.	Repair Flaw No.	Wall / Plate Remaining	Approximate Corrosion Area (Total Affected Area)	Patch Plate Size/Thickness
2	1	1	0.460" (Topside)	1.000" X 1.000" Area	4" x 1/4" Round Patch Plate

Tank Floor Weld Defects					
Plate No.	Testex Flaw No.	Repair Flaw No.	Weld (left/right of plate)	Characterization	Patch Plate Size/Thickness
3	1	1	Left	underside to internal	Remove defective weld and reweld
3	2	2	Right	underside to internal	Remove defective weld and reweld
4	3	3	Left	underside to internal	Remove defective weld and reweld

Course 1 - Lower Dome Weld Defects					
Plate No.	Testex Flaw No.	Repair Flaw No.	Weld (left/right of plate)	Characterization	Patch Plate Size/Thickness
2	1	1	Left	underside to internal	Remove defective weld and reweld
6	2	2	Left	underside to internal	Remove defective weld and reweld
7	3	3	Left	underside to internal	Remove defective weld and reweld
7	4	4	Right	underside to internal	Remove defective weld and reweld
14	5	5	Left	leak (found by Jurva)	Remove defective weld and reweld
20	6	6	Left	leak (found by Jurva)	Remove defective weld and reweld
23	7	7	Left	leak (found by Jurva)	Remove defective weld and reweld
23	8	8	Right	underside to internal	Remove defective weld and reweld
24	9	9	Left	leak (found by Jurva)	Remove defective weld and reweld
24	10	10	Right	underside to internal	Remove defective weld and reweld
25	11	11	Right	topside (grooving)	Remove defective weld and reweld
26	12	12	Right	topside (grooving)	Remove defective weld and reweld
28 / 29	13	13	-	topside (light corrosion)	Remove defective weld and reweld
32	14	14	Right	underside to internal	Remove defective weld and reweld
35	15	15	Right	underside to internal	Remove defective weld and reweld
43 / 44	16	16	-	topside (light corrosion)	Remove defective weld and reweld
44	17	17	Right	leak (found by Jurva)	Remove defective weld and reweld