TANK #2 - QUADRANT D

Nominal Plate Thickness: 0.250"

Date Inspected/Confirmed: 05/05/2008

Tank Section: Floor/Shell
Quadrant: D
Course:
Plate: # 17 - 18

Flaw #119 - Lack of fusion
.211" depth 6 ½" long (top)

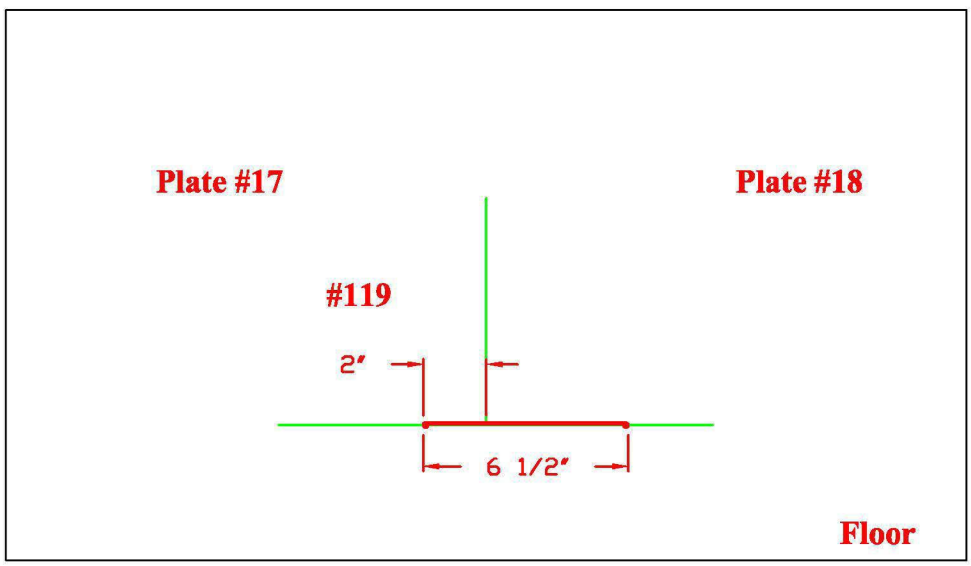

Tank Section: Floor/Shell
Quadrant: D
Course:
Plate: # 18 - 19

Flaw #120A - Lack of fusion
.088" depth 3 ½" long (left)
Flaw #120B - Incomplete pen.
.228" depth 1 ½" long (center)

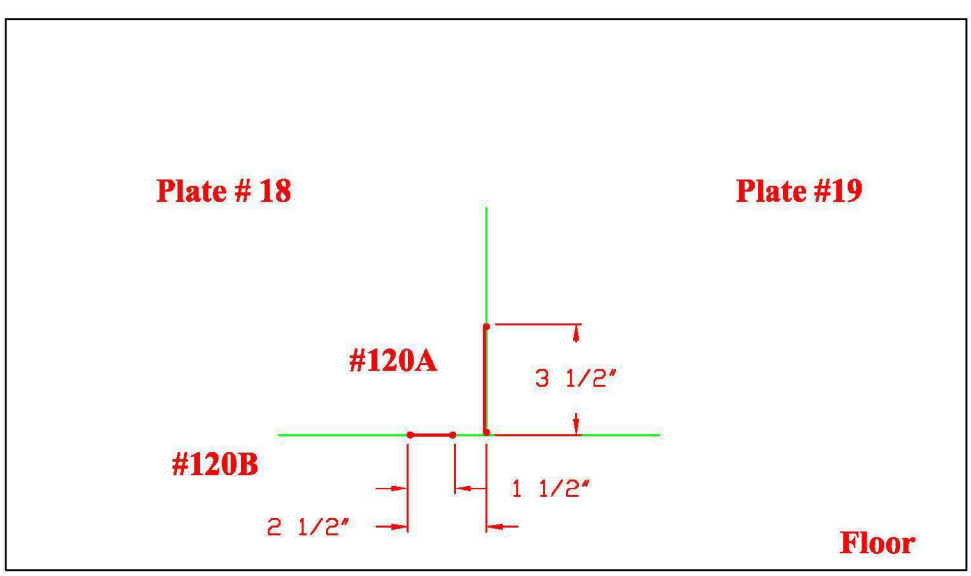

Drawing is not to scale

TANK #2 - QUADRANT D

Nominal Plate Thickness: 0.250"

Date Inspected/Confirmed: 05/08/2008

Tank Section: Floor/Shell
Quadrant: D
Course:
Plate: # 20 - 21

Flaw #122 - Lack of fusion
.192 depth 2 ¼" long (Right)

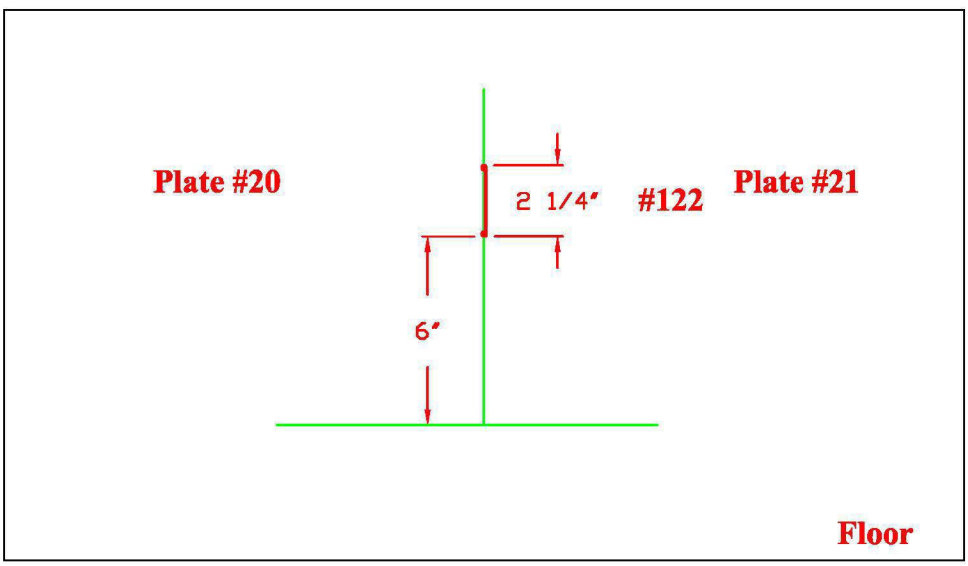

Tank Section: Floor/Shell
Quadrant: D
Course:
Plate: # 19 - 20

Flaw #121A - Intermittent crack
.238 depth 5" long (center)

Flaw #121B - Intermittent crack
.231 depth 8" long (top)

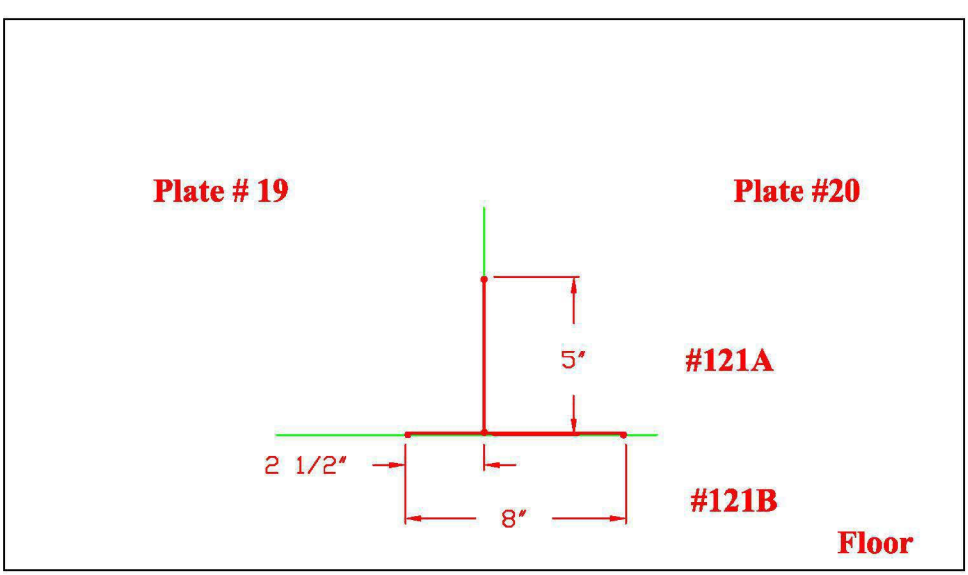

Drawing is not to scale

TANK #2 - QUADRANT A-B

Nominal Plate Thickness: 0.250"

Date Inspected/Confirmed: 05/06/2008

Tank Section: Lower dome
Quadrant: A
Course: 1
Plate: # 2 - 3

Flaw #1 - Dent
⅜" deep
1" dia

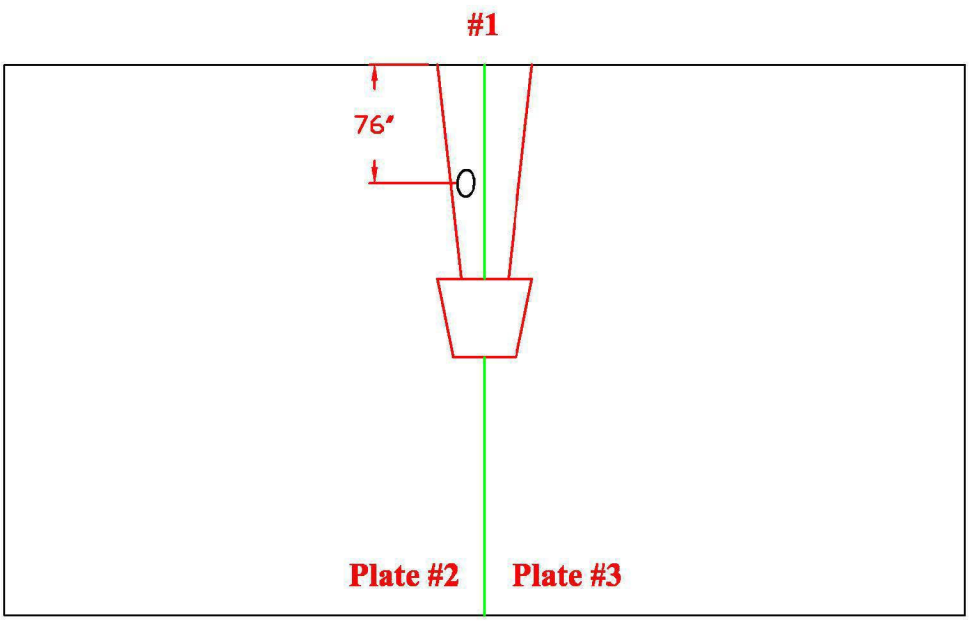

Tank Section: Lower dome
Quadrant: B
Course: 1
Plate: # 7 - 8

Flaw #2 - Intermittent crack
2A - .229" depth 10" long (right side)
2B - .154" depth 10" long (left side)

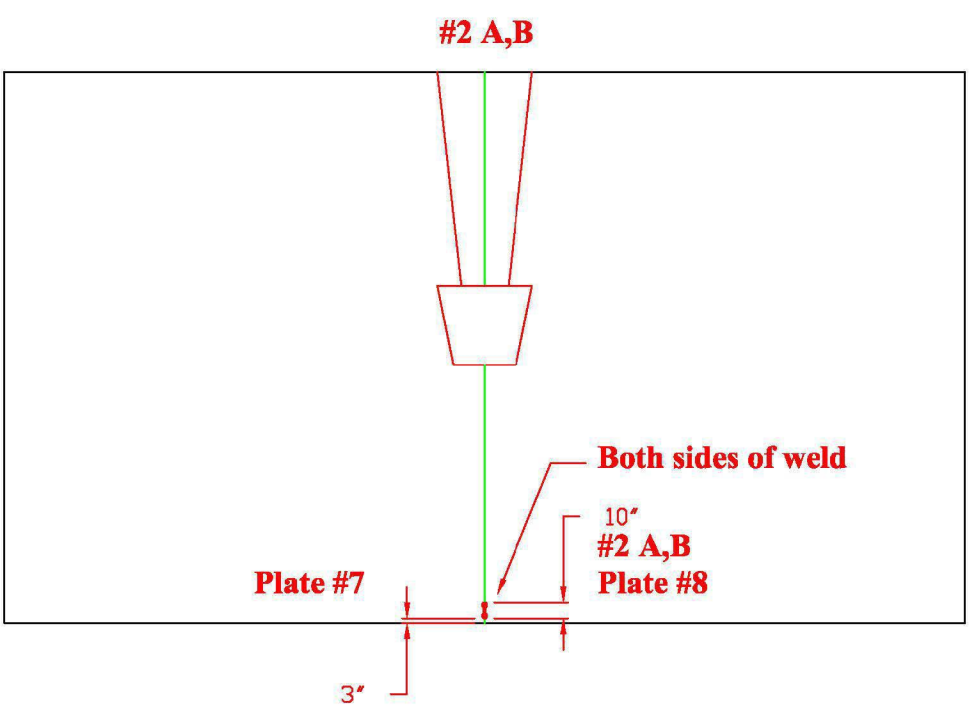

Drawing is not to scale

TANK #2 - QUADRANT C-D

Nominal Plate Thickness: 0.250"

Date Inspected/Confirmed: 05/06/2008

Tank Section: Lower dome
Quadrant: C
Cours: 1
Plate: # 15 - 16

Flaw #3 - Intermittent crack
3A - .223" depth 10" long (left side)
3B - .214" depth 10" long (right side)

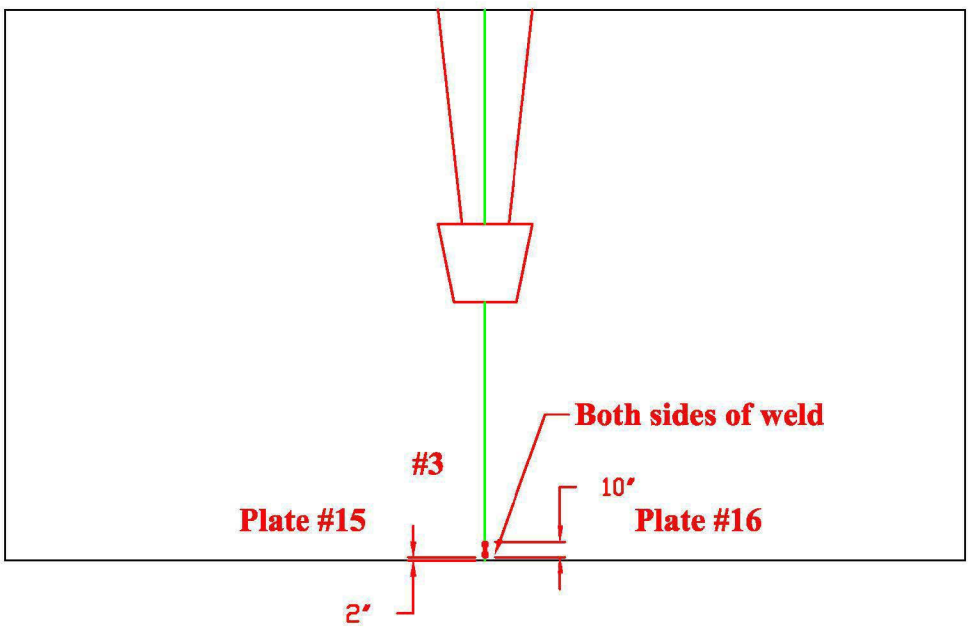

Tank Section: Lower dome
Quadrant: D
Course: 1
Plate: # 20 - 21

Flaw #4A - Incomplete .222" depth 1" long

Flaw #4B - Arc strike at toe .069" depth 2" long

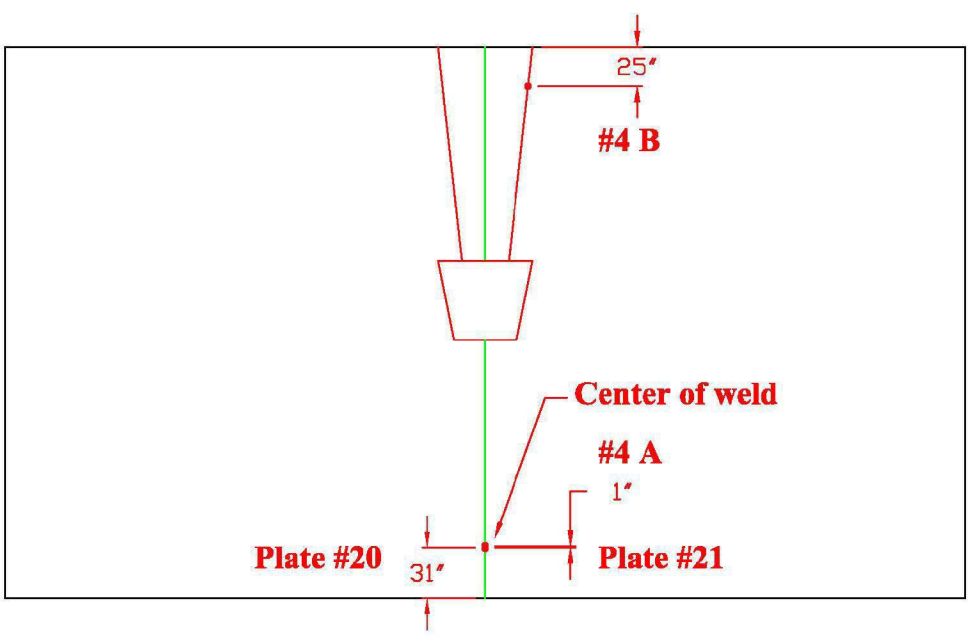

Drawing is not to scale

TANK #2 - QUADRANT D-C

Nominal Plate Thickness: 0.250"

Date Inspected/Confirmed: 05/06/2008

Tank Section: Lower dome
Quadrant: D
Course: 2
Plate: # 47

Flaw # 5A - W.L.
.147" - .210" Remaining

Flaw # 5B - Incomplete Pen.
.215" depth 1" long

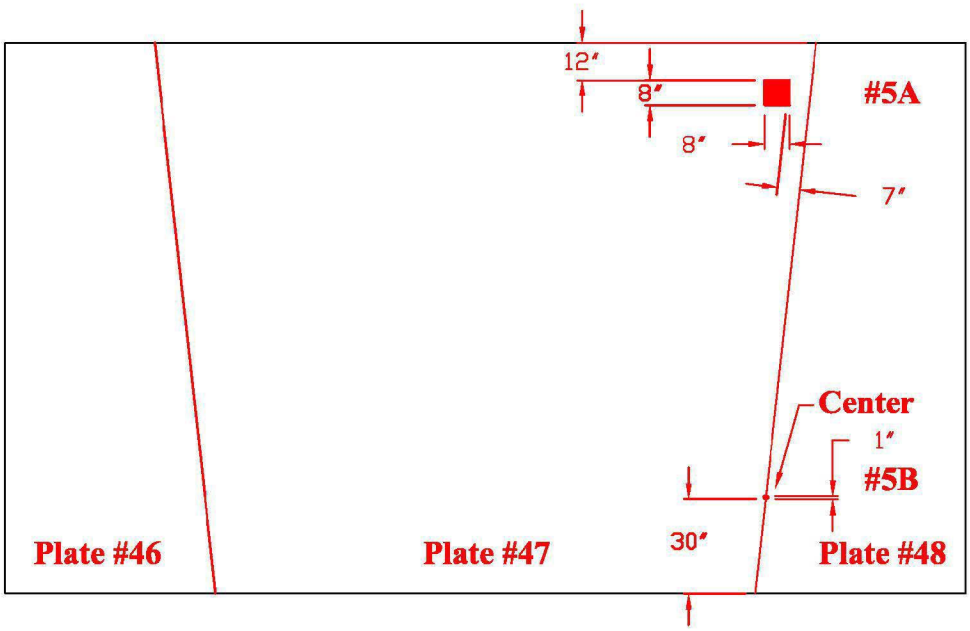

Tank Section: Lower dome
Quadrant: C
Course: 2
Plate: # 39

Flaw # 6 - Dent

N.S.W.L.

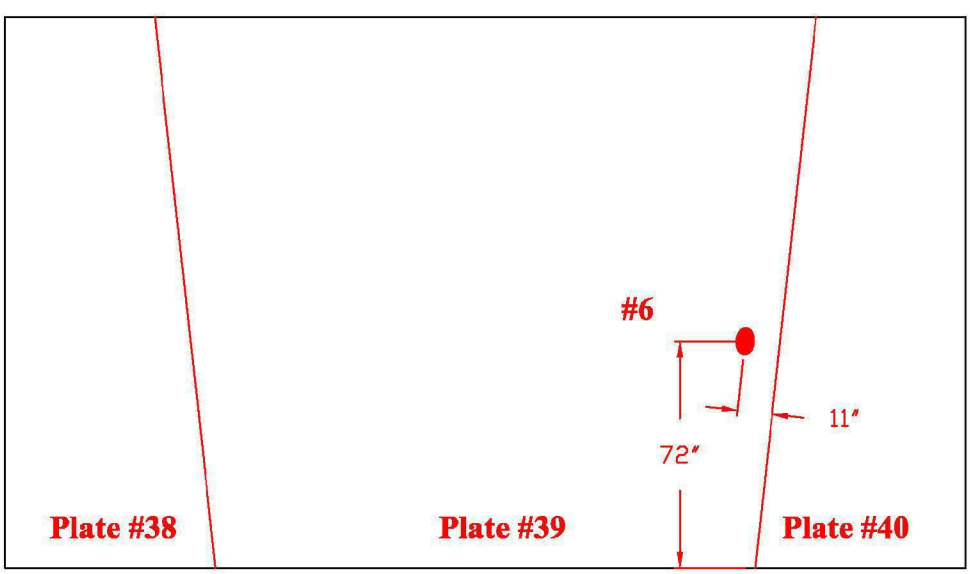

Drawing is not to scale

TANK #2 - QUADRANT A

Nominal Plate Thickness: 0.250"

Date Inspected/Confirmed: 04/07/2008

Tank Section: Lower dome
Quadrant: A
Course: 3
Plate: #13 - 14

Flaw #7 - Lack of fusion
.195" depth 4" long
(right side)

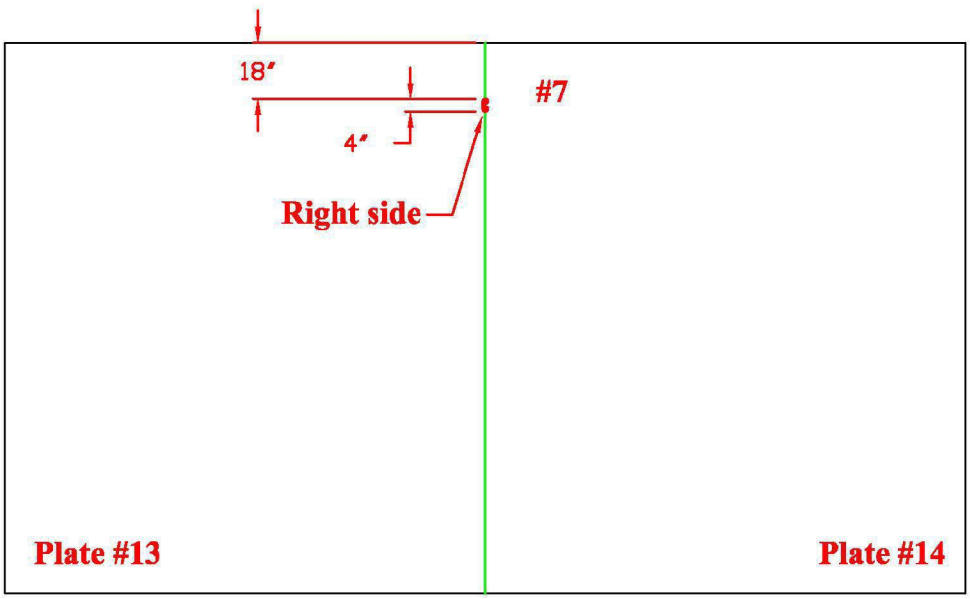

Tank Section: Lower dome
Quadrant: A
Course: 3
Plate: #14 - 15

Flaw #8 - W.L.
.223" Remaining

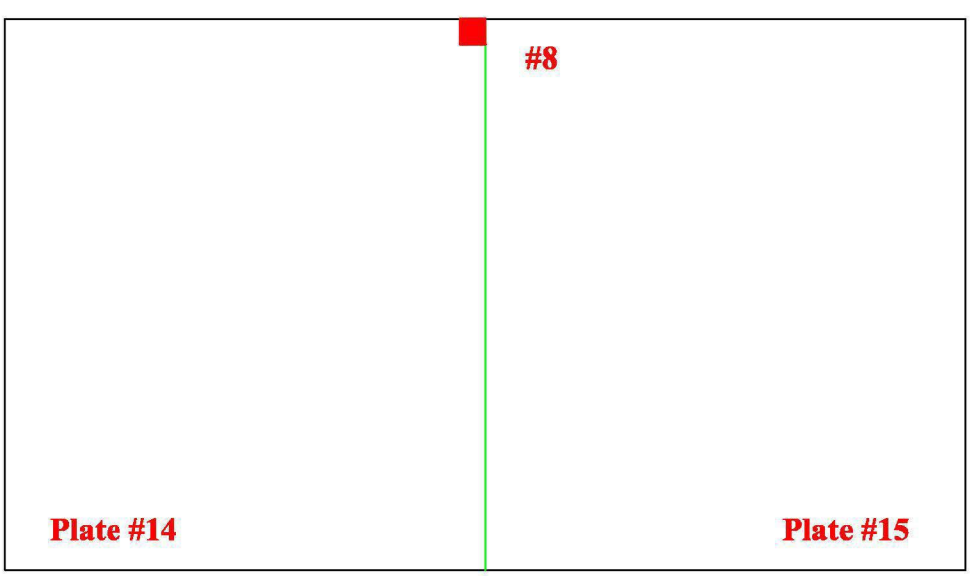

Drawing is not to scale

TANK #2 - QUADRANT C

Nominal Plate Thickness: 0.250"

Date Inspected/Confirmed: 04/03/2008

Tank Section: Lower dome
Quadrant: C
Course: 3
Plate: #41

Flaw #9 - W.L.
.230 Remaining

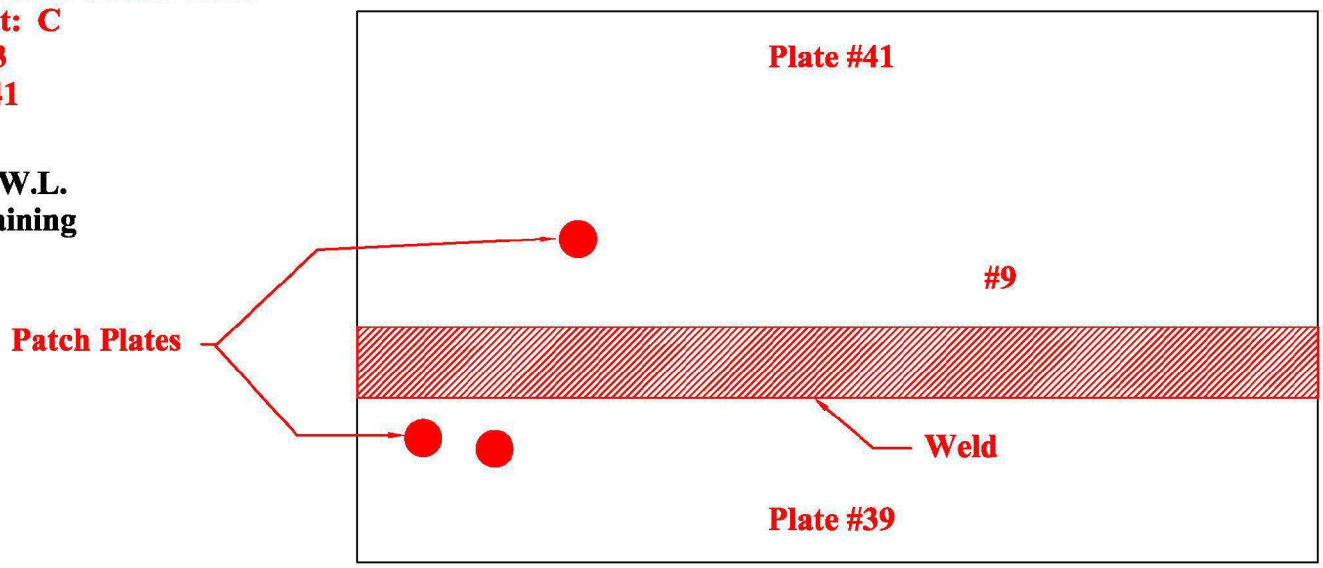

Tank Section: Lower dome
Quadrant: C
Course: 3
Plate: #45

Flaw #10 - W.L./Pit
.219 Remaining

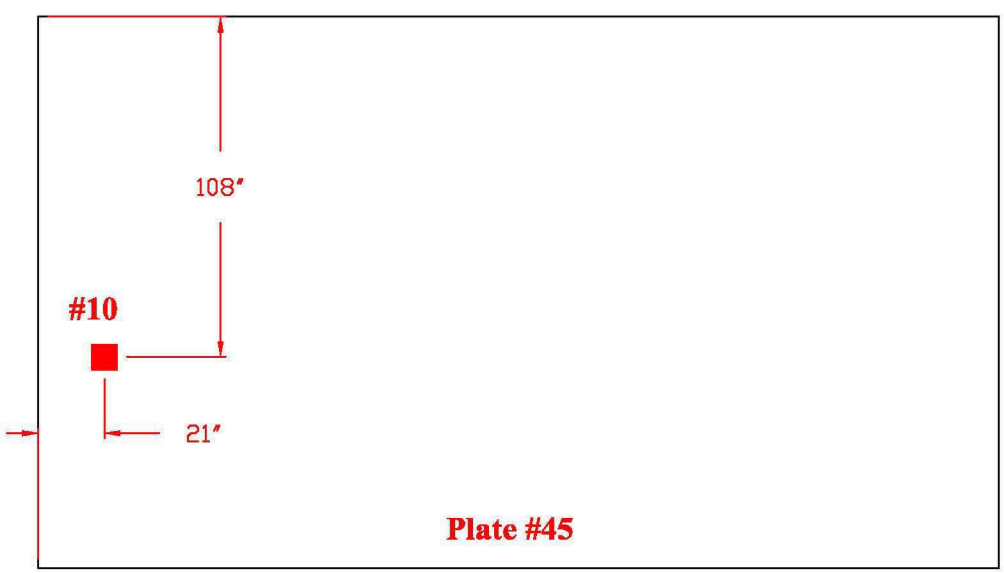

Drawing is not to scale

TANK #2 - QUADRANT A

Nominal Plate Thickness: 0.250"

Date Inspected/Confirmed: 04/08/2008

Tank Section: Lower dome
Quadrant: A
Course: 3
Plate: # 5

Flaw #11 - W.L.
.226" Remaining

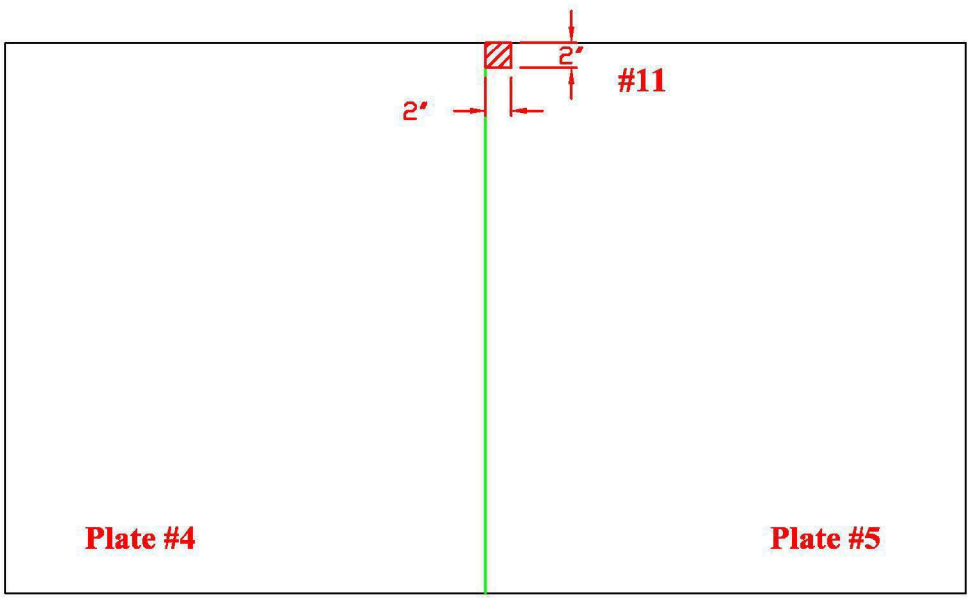

Tank Section: Lower dome
Quadrant: A
Course: 3
Plate: # 8

Flaw #12 - W.L.
.233" Remaining

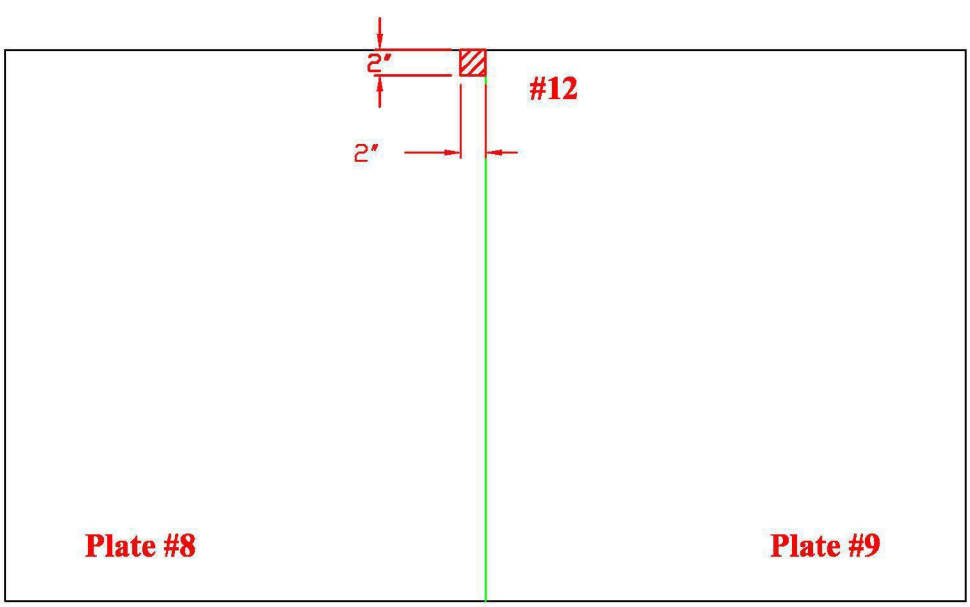

Drawing is not to scale

Date Inspected/Confirmed: 04/09/2008

TANK # 2 - QUADRANT A

Nominal Plate Thickness: 0.250"

Tank Section: Barrel

Course: 25
Plate #: 2

Flaw # - Type - Remaining:

#13 - W.L. - .231"

#34 - W.L. - .219"

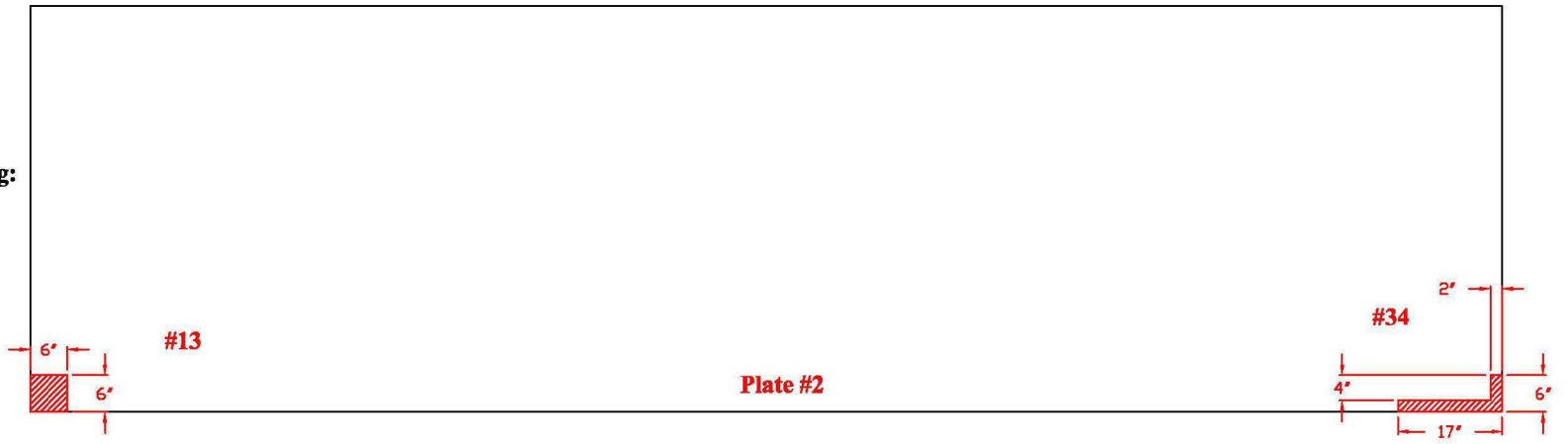

Tank Section: Barrel

Course: 2
Plate #: 2

Flaw # - Type - Remaining:

#14 - Lack of fusion

.125" depth 7" long
Top of weld

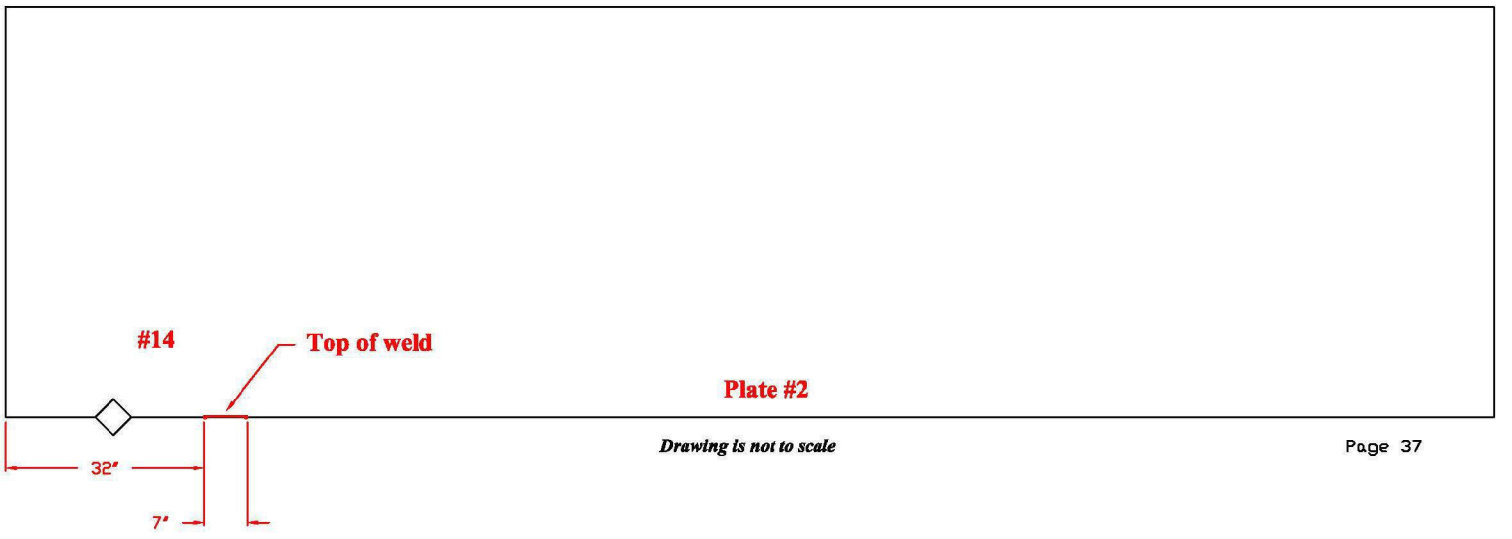

Drawing is not to scale

Date Inspected/Confirmed: 04/09/2008

TANK # 2 - QUADRANT A

Nominal Plate Thickness: 0.250"

Tank Section: Barrel

Course: 21
Plate #: 2

Flaw # - Type - Remaining:

#15 - W.L. - .233"

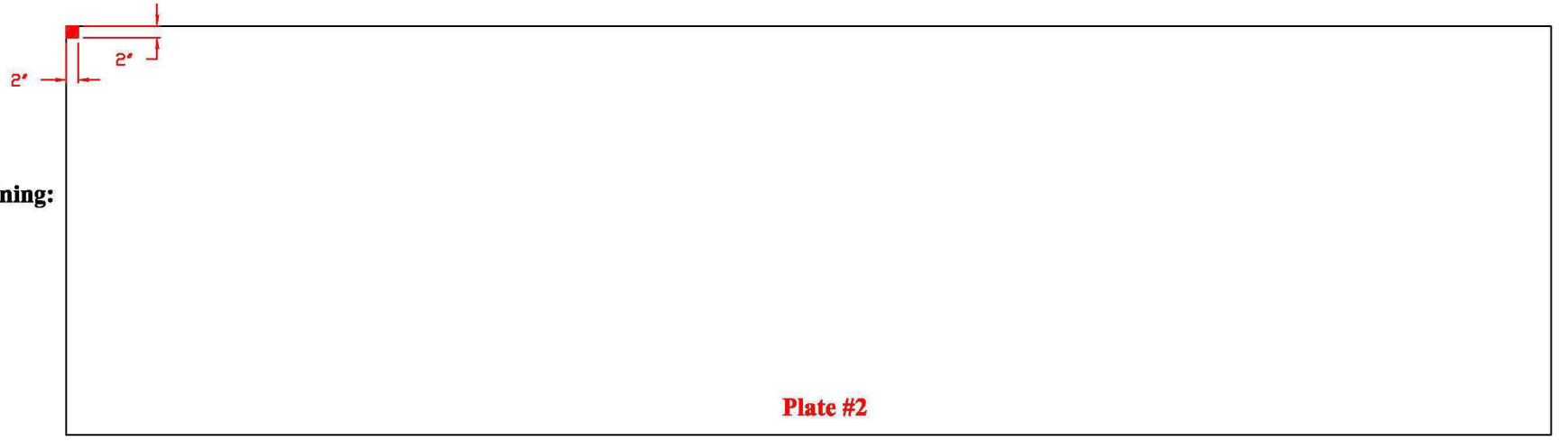

Tank Section: Barrel

Course: 25
Plate #: 1

Flaw # - Type - Remaining:

#16A - W.L. - .232"

#16B - W.L. - .227"

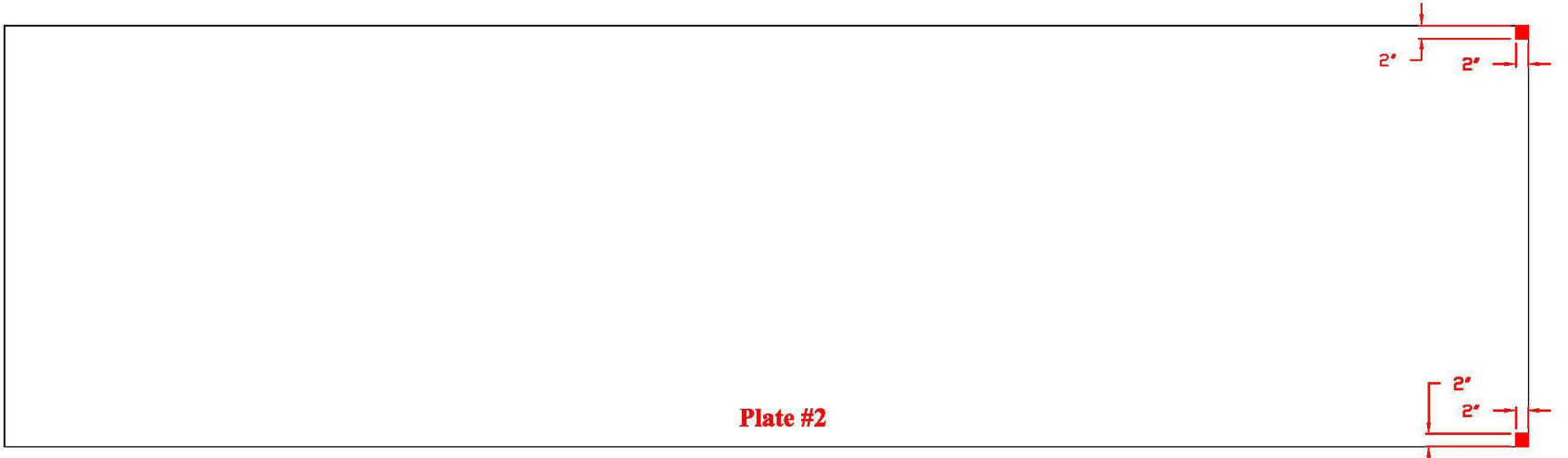

Drawing is not to scale

Date Inspected/Confirmed: 04/10/2008

TANK # 2 - QUADRANT A
Nominal Plate Thickness: 0.250"

Tank Section: Barrel

Course: 21
Plate #: 3

Flaw # - Type - Remaining:

#17A - Lack of fusion
.173" depth 6" long
(bottom of weld)

#17B - W.L. - .224"
#17C - W.L. - .234"

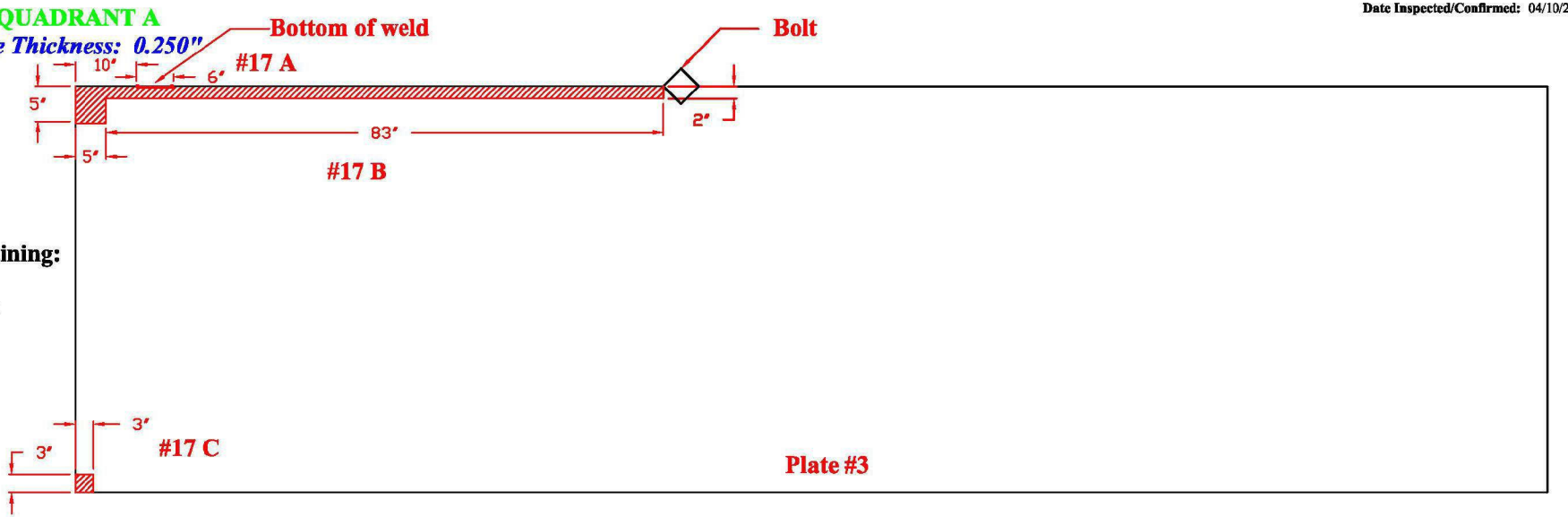

Tank Section: Barrel

Course: 7
Plate #: 3

Flaw # - Type - Remaining:

#18 - W.L. - .228"

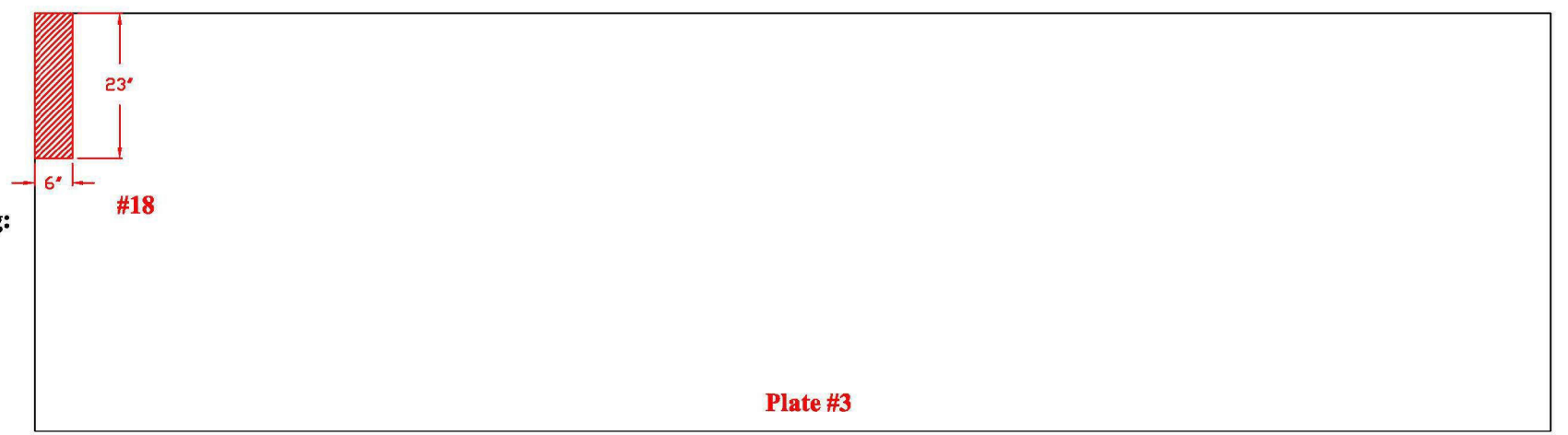

Drawing is not to scale

TANK # 2 - QUADRANT D

Nominal Plate Thickness: 0.250"

Date Inspected/Confirmed: 04/10/2008

Tank Section: Barrel

Course: 24
Plate #: 14

Flaw # - Type - Remaining:

#19A - W.L. - .227"

#19B - W.L. - .232"

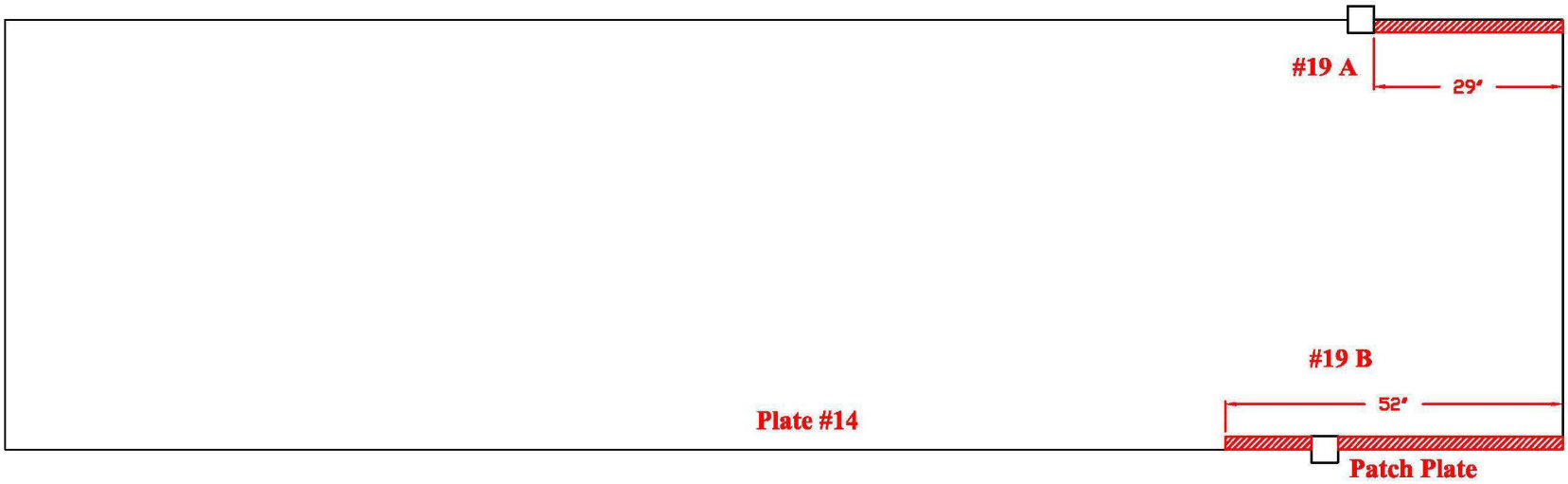

Tank Section: Barrel

Course: 22
Plate #: 14

Flaw # - Type - Remaining:

#20 - W.L. - .234"

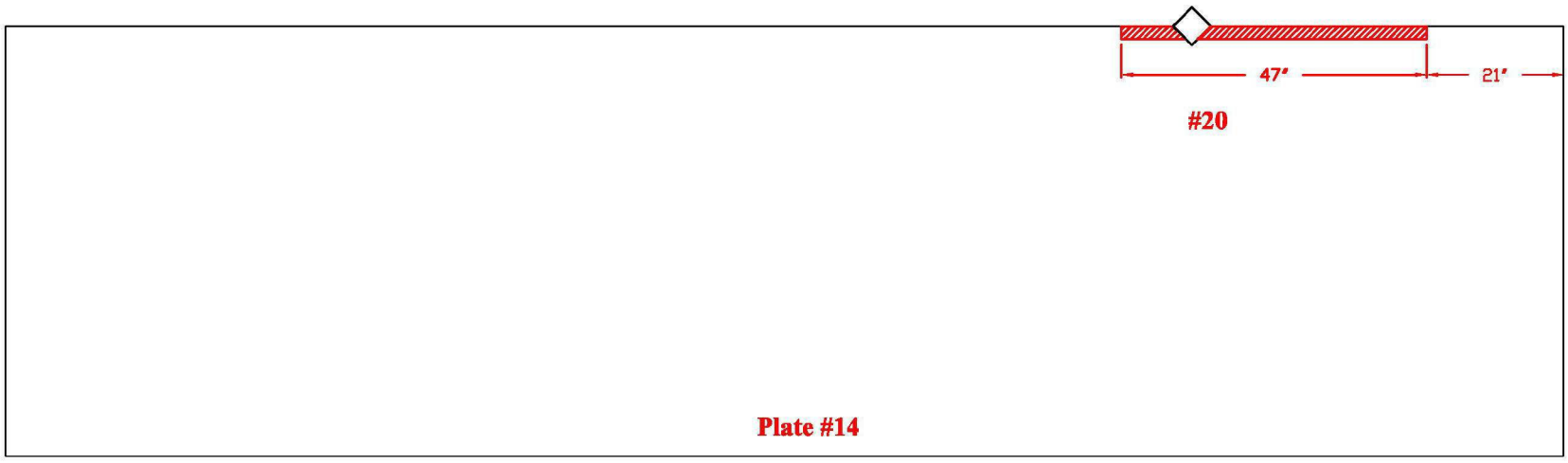

Drawing is not to scale

TANK # 2 - QUADRANT D

Nominal Plate Thickness: 0.250"

Date Inspected/Confirmed: 04/10/2008

Tank Section: Barrel

Course: 4
Plate #: 15

Flaw # - Type - Remaining:

#21 - W.L. - .235"

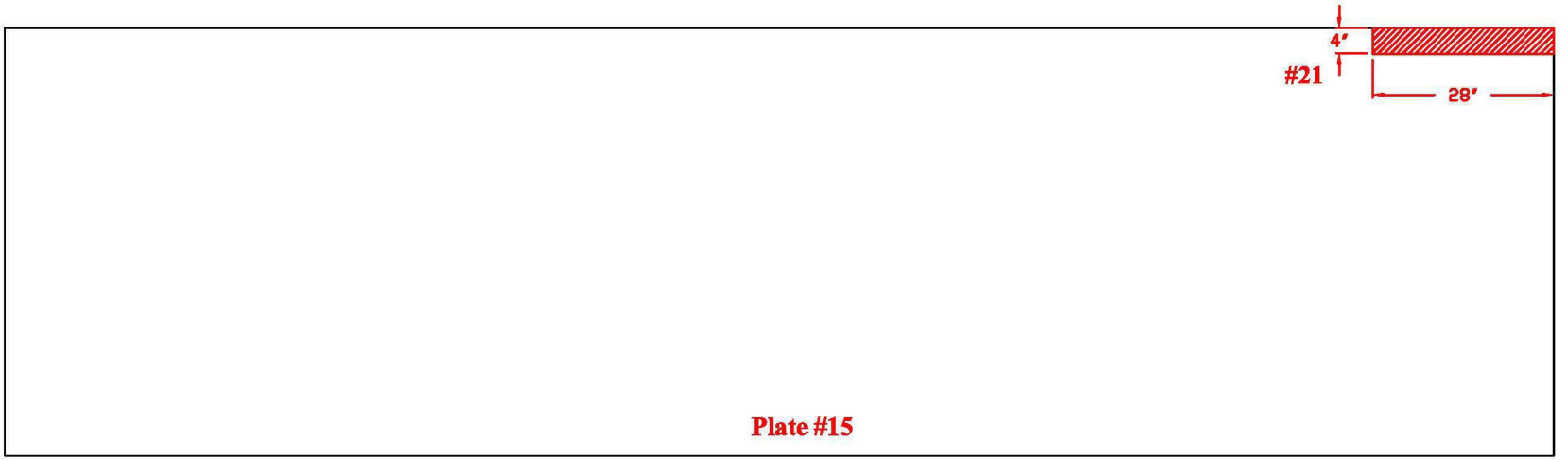

Tank Section: Barrel

Course: 8
Plate #: 14

Flaw # - Type - Remaining:

#22A - W.L./Pit - .230"

#22B - W.L./Pit - .221"

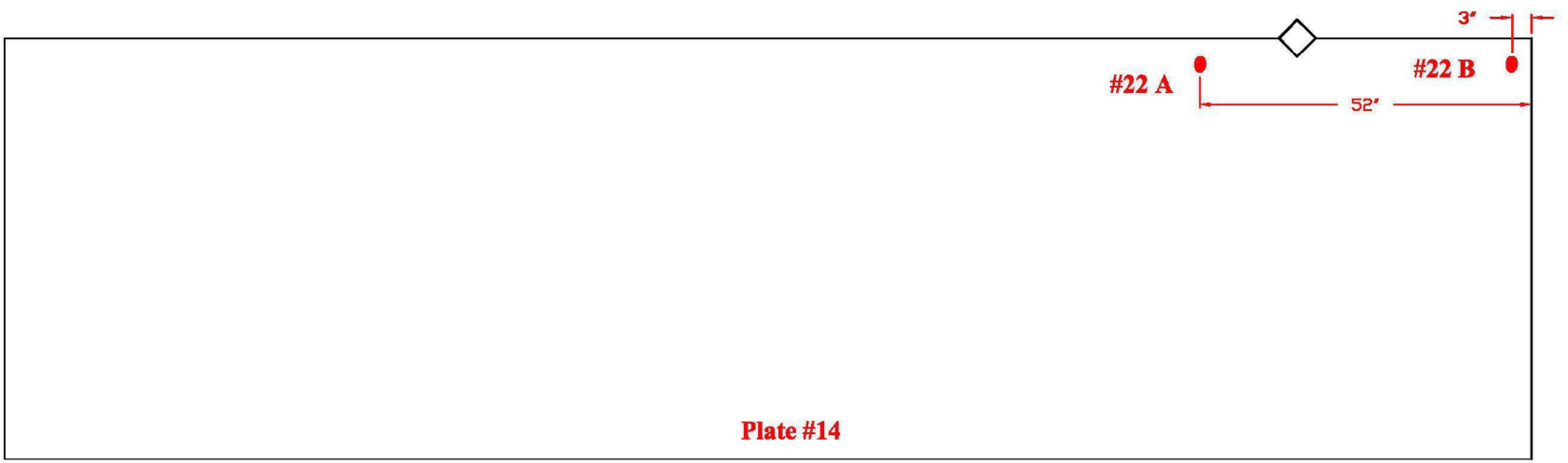

Drawing is not to scale

TANK # 2 - QUADRANT A

Nominal Plate Thickness: 0.250"

Date Inspected/Confirmed: 04/14/2008

Tank Section: Barrel

Course: 8
Plate #: 15

Flaw # - Type - Remaining:

#23 - W.L./Pit - .228"

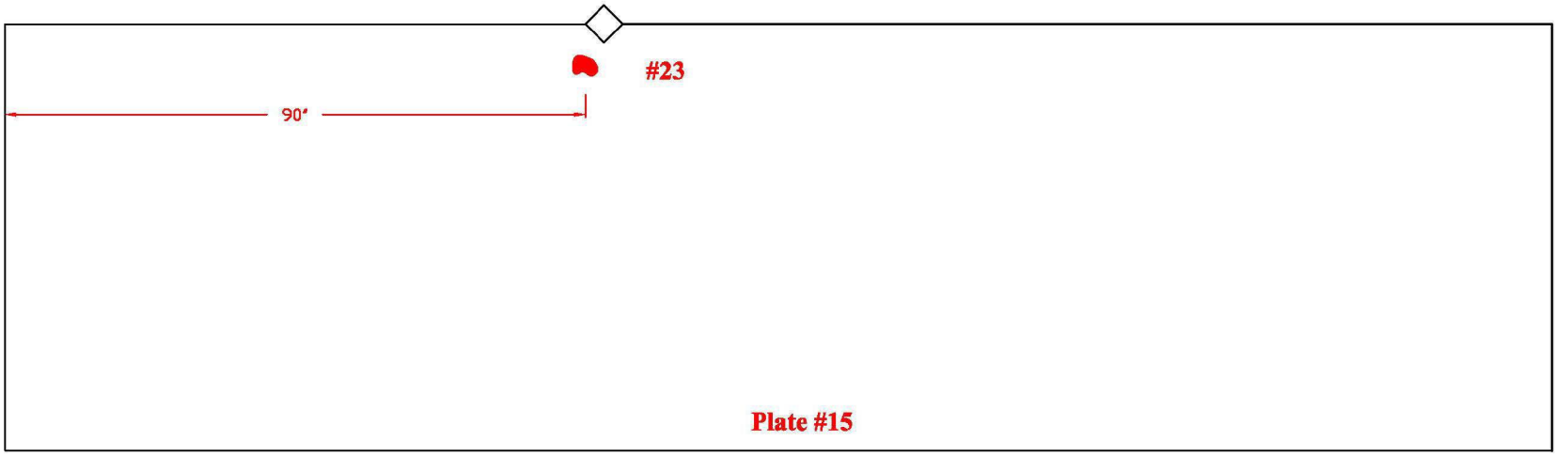

Tank Section: Barrel

Course: 26
Plate #: 3

Flaw # - Type - Remaining:

#24 - Porosity

.210" depth ¾" long
(center of weld)

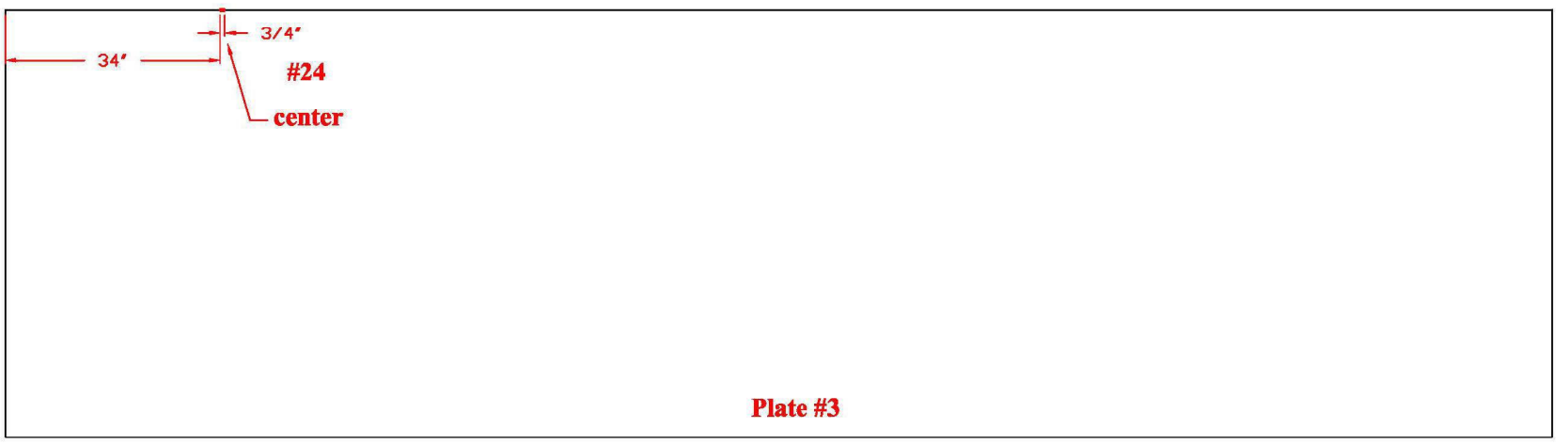

Drawing is not to scale

TANK # 2 - QUADRANT A

Nominal Plate Thickness: 0.250"

Date Inspected/Confirmed: 04/04/2008

Tank Section: Barrel

Course: 17
Plate #: 3

Flaw # - Type - Remaining:

#25 - Toe Arc Strikes
.063" depth
5½" L x 3" W

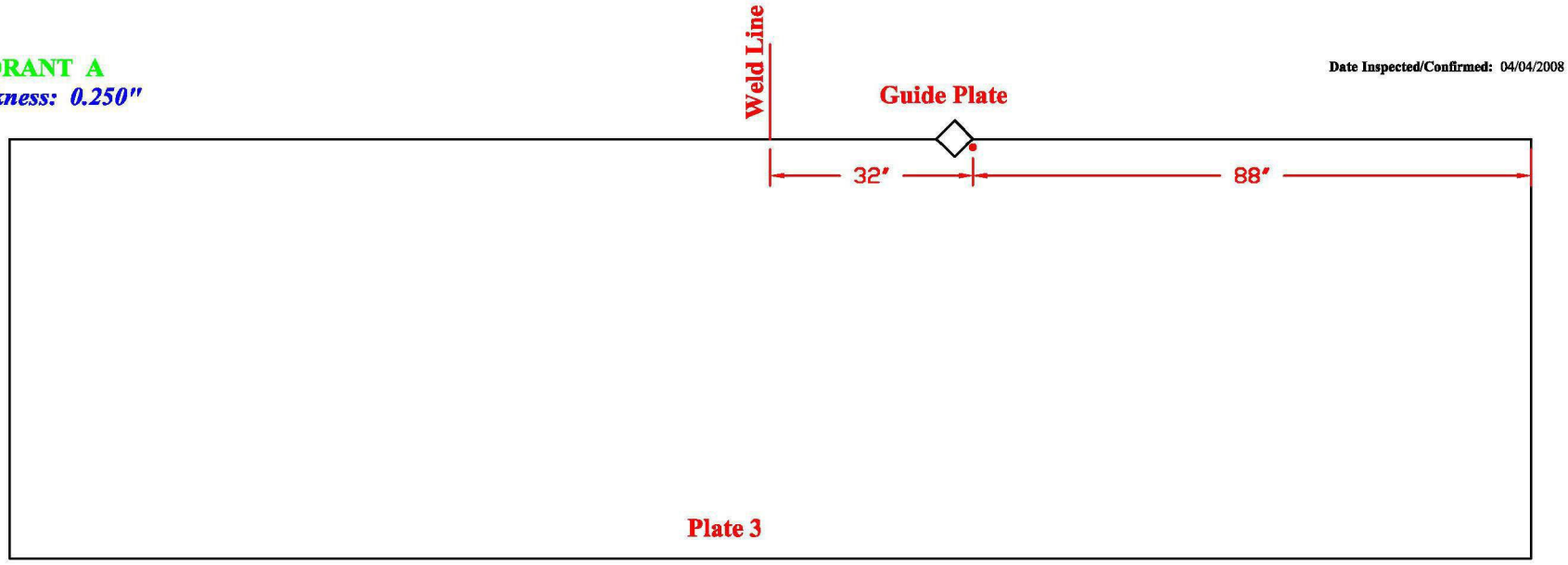

Tank Section: Barrel

Course: 20
Plate #: 3

Flaw # - Type - Remaining:

#26 - Porosity
.181" depth 1¾" long
(bottom of weld)

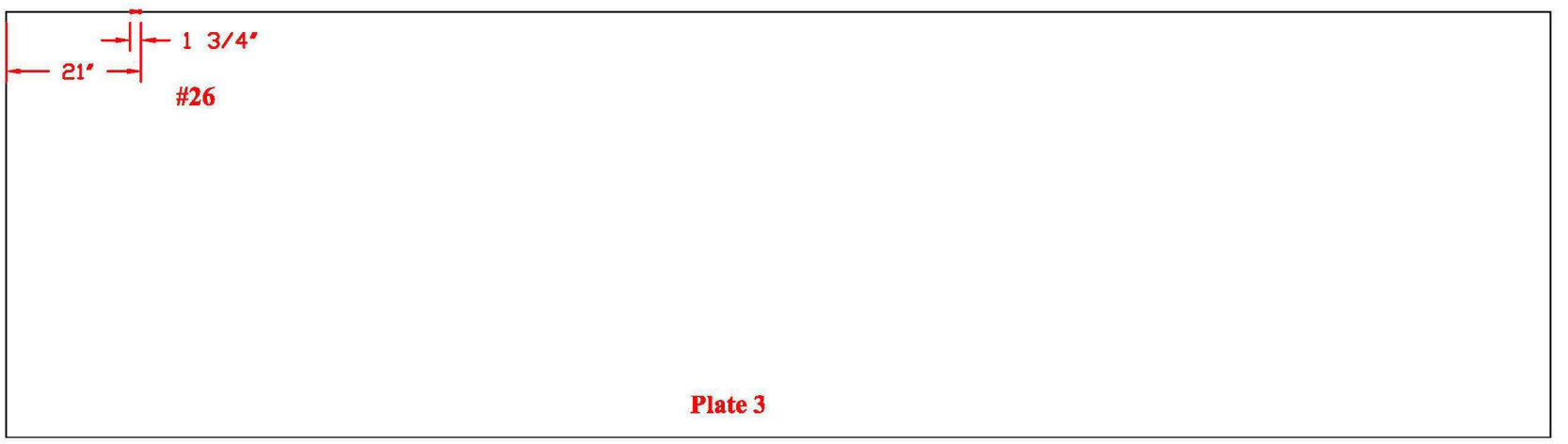

Drawing is not to scale

TANK # 2 - QUADRANT A
Nominal Plate Thickness: 0.250"

Date Inspected/Confirmed: 04/14/2008

Tank Section: Barrel

Course: 25
Plate #: 3

Flaw # - Type - Remaining:

#27 - Pit - .234"

#35 - W.L. - .221"

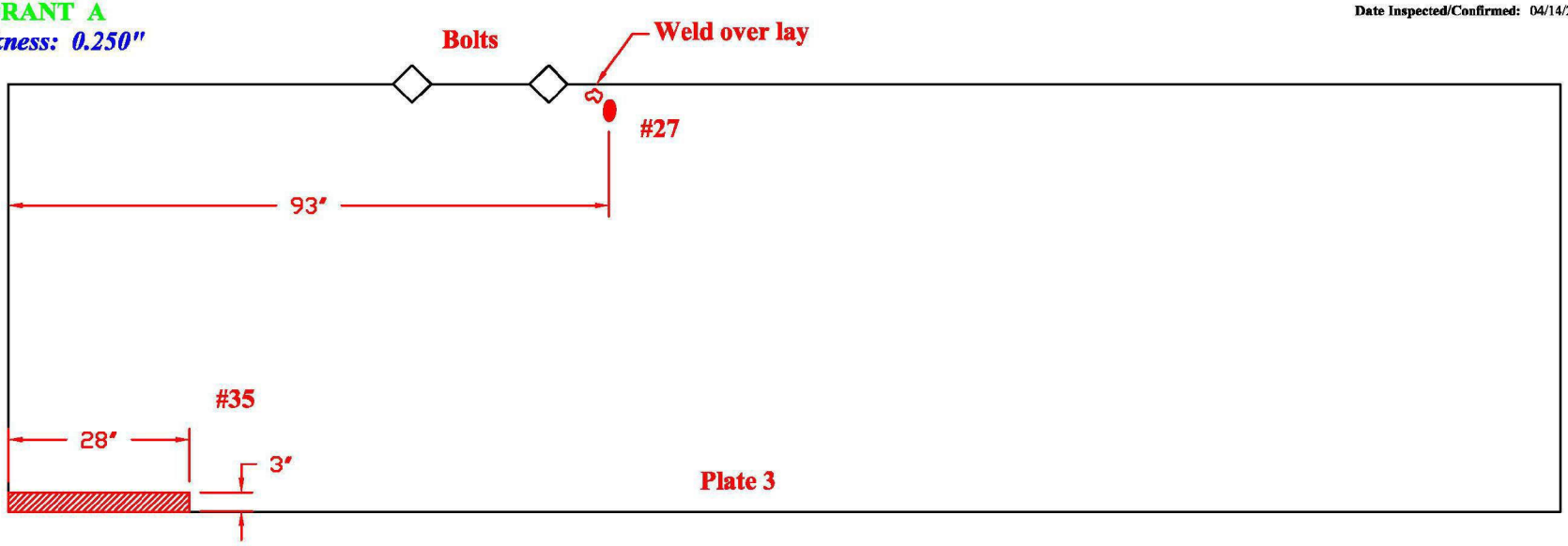

Tank Section: Barrel

Course: 8
Plate #: 3

Flaw # - Type - Remaining:

#28 - Pit - .220"

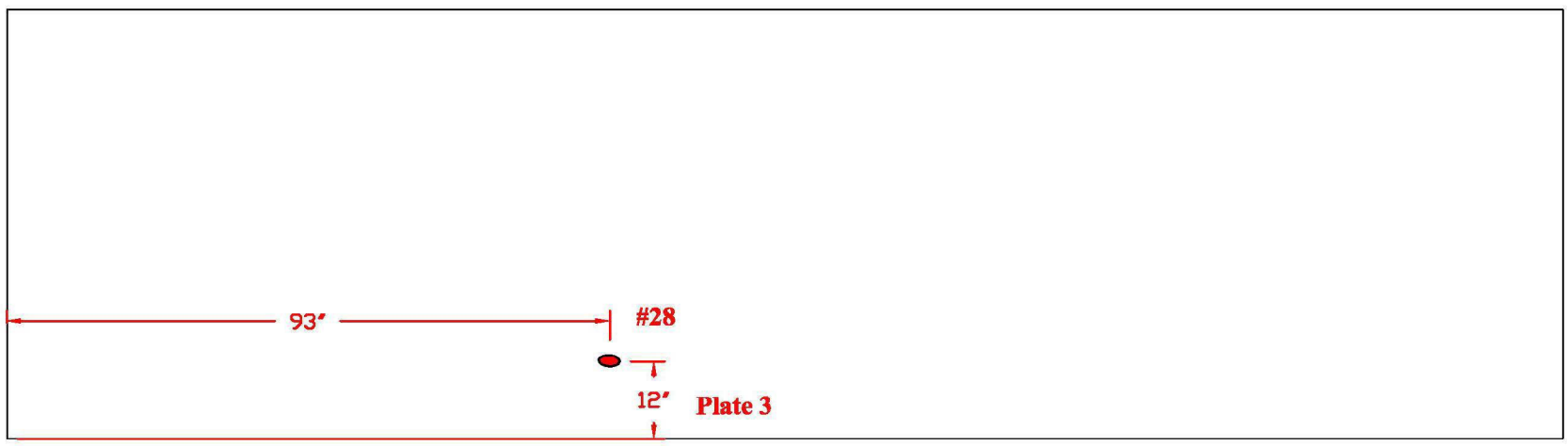

Drawing is not to scale

TANK # 2 - QUADRANT D

Nominal Plate Thickness: 0.250"

Date Inspected/Confirmed: 04/14/2008

Tank Section: Barrel

Course: 13
Plate #: 14

Flaw # - Type - Remaining:
#29 - Lack of fusion
A- .173" depth 3" long (top)
B- .112" depth 4" long (bottom)
C- .205" depth 3" long (bottom)
C- .206" depth 4" long (top)

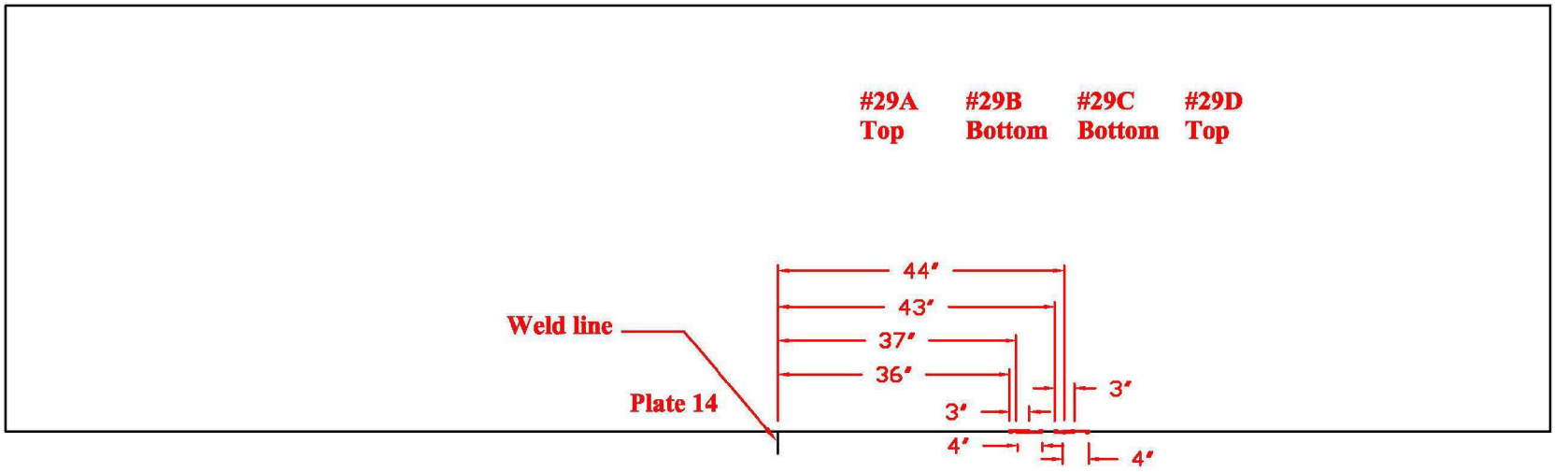

Tank Section: Barrel

Course: 4
Plate #: 14

Flaw # - Type - Remaining:

#30 - Pit -.226"

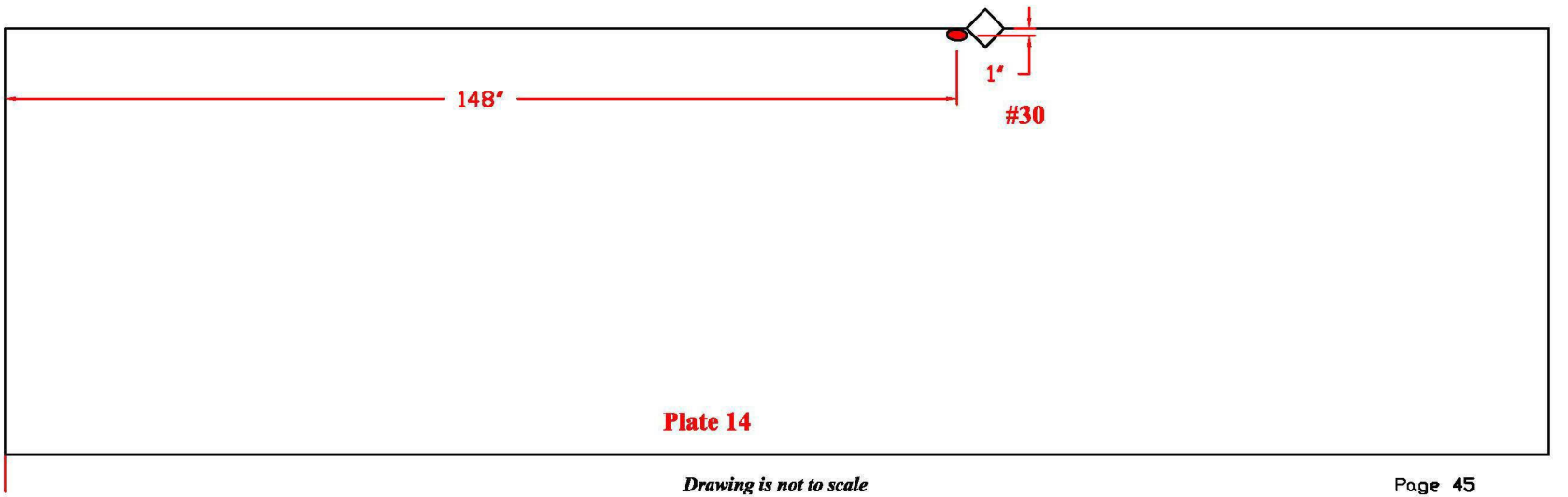

Drawing is not to scale

TANK # 2 - QUADRANT D

Nominal Plate Thickness: 0.250"

Date Inspected/Confirmed: 04/10/2008

Tank Section: Barrel

Course: 5
Plate #: 14

Flaw # - Type - Remaining:

#31A - W.L./Pit - .235"

#31B - W.L./Pit - .235"

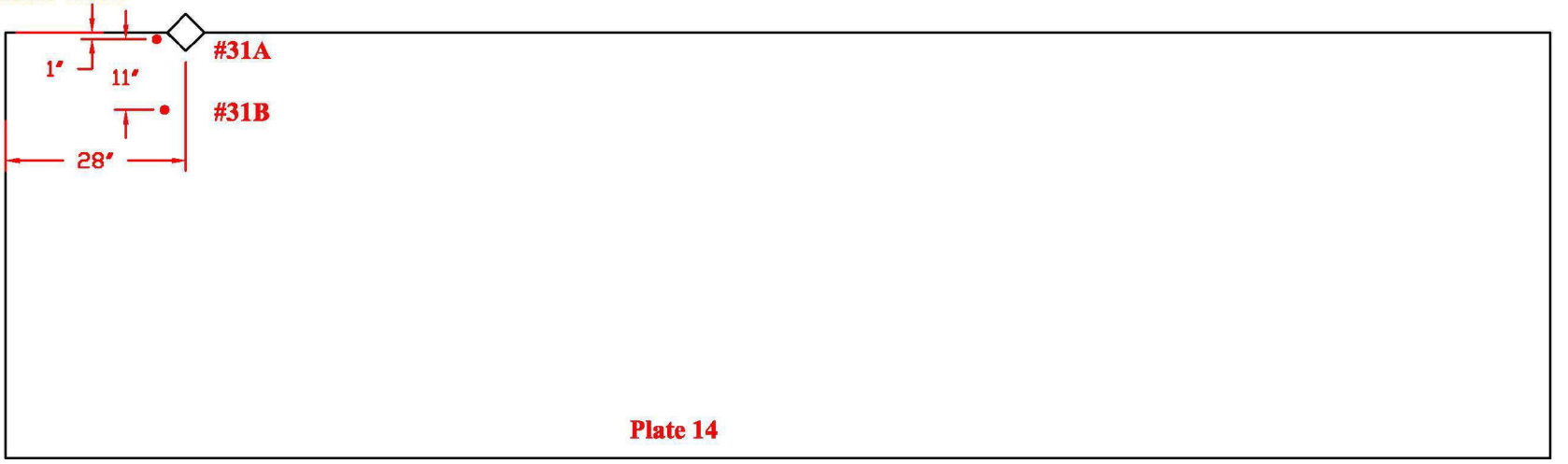

Tank Section: Barrel

Course: 21
Plate #: 15

Flaw # - Type - Remaining:

#32A - W.L. - .230"

#32B - W.L. - .219"

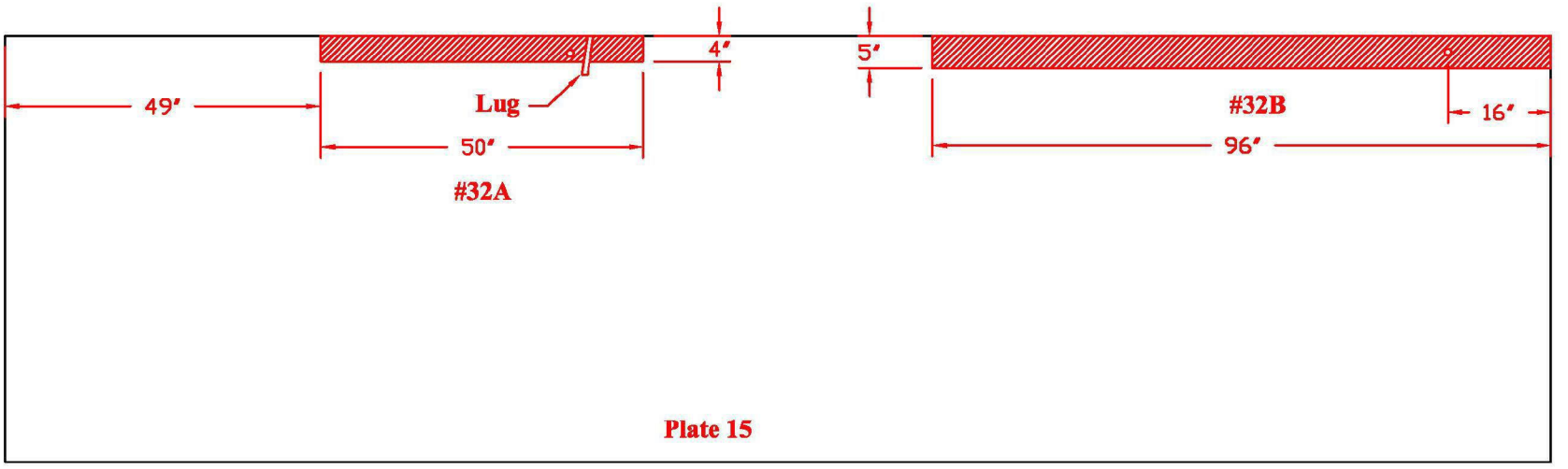

Drawing is not to scale

TANK # 2 - QUADRANT D - A
Nominal Plate Thickness: 0.250"

Date Inspected/Confirmed: 04/10/2008

Tank Section: Barrel

Course: 20
Plate #: 14

Flaw # - Type - Remaining:

#33 - Tack weld
.082" depth
1½" L x ¼" W

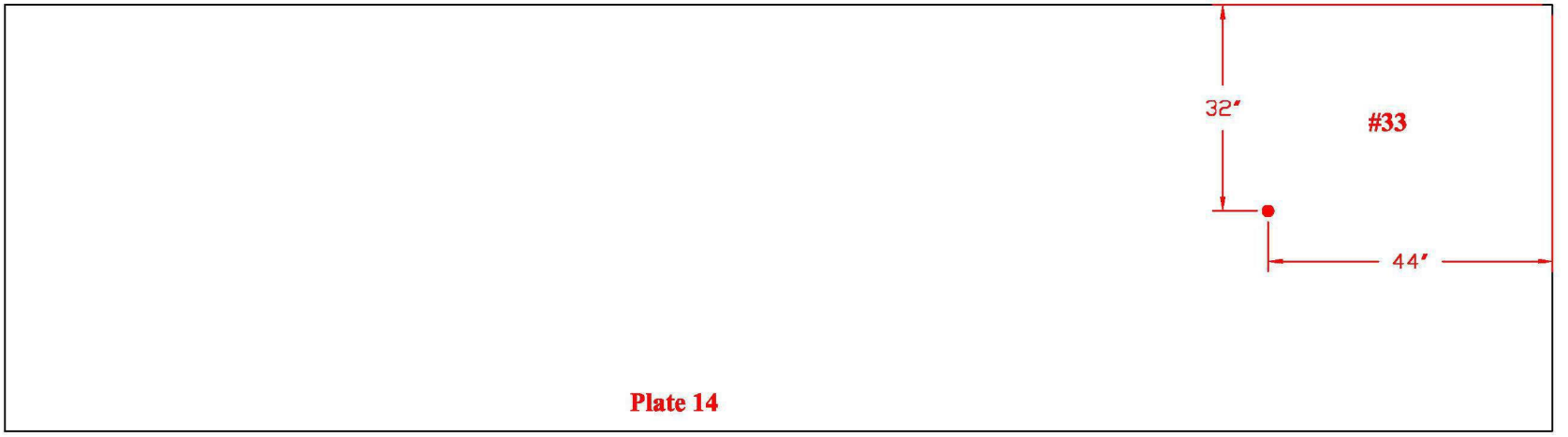

Tank Section: Barrel

Course: 10
Plate #: 2

Flaw # - Type - Remaining:

#36 - W.L. - .218"

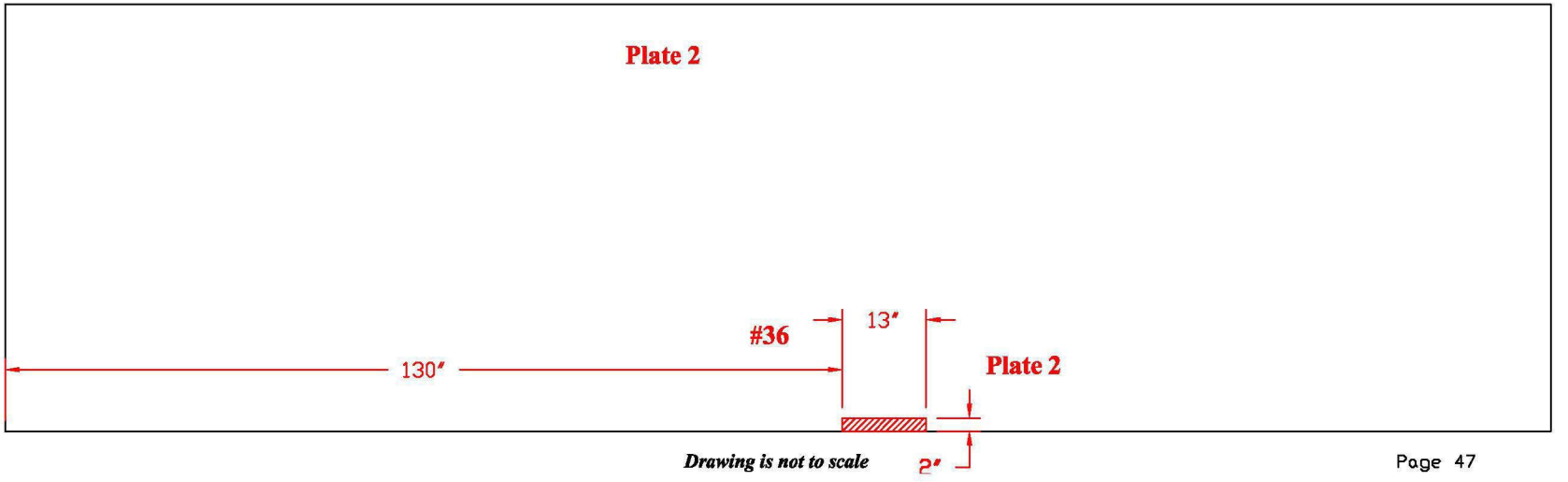

Drawing is not to scale

TANK # 2 - QUADRANT D
Nominal Plate Thickness: 0.250"

Date Inspected/Confirmed: 04/10/2008

Tank Section: Barrel

Course: 25
Plate #: 14

Flaw # - Type - Remaining:

#39 - W.L. - .230"

#42 - W.L. - .234" A
.223" B

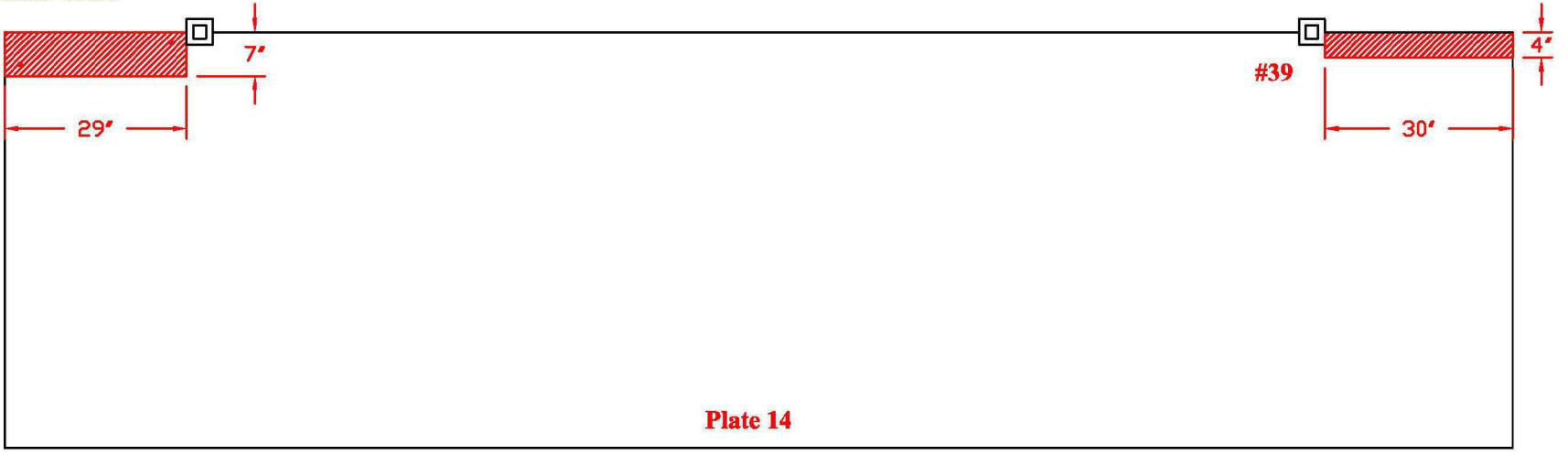

Tank Section: Barrel

Course: 26
Plate #: 14

Flaw # - Type - Remaining:

#40 - W.L. - .214"

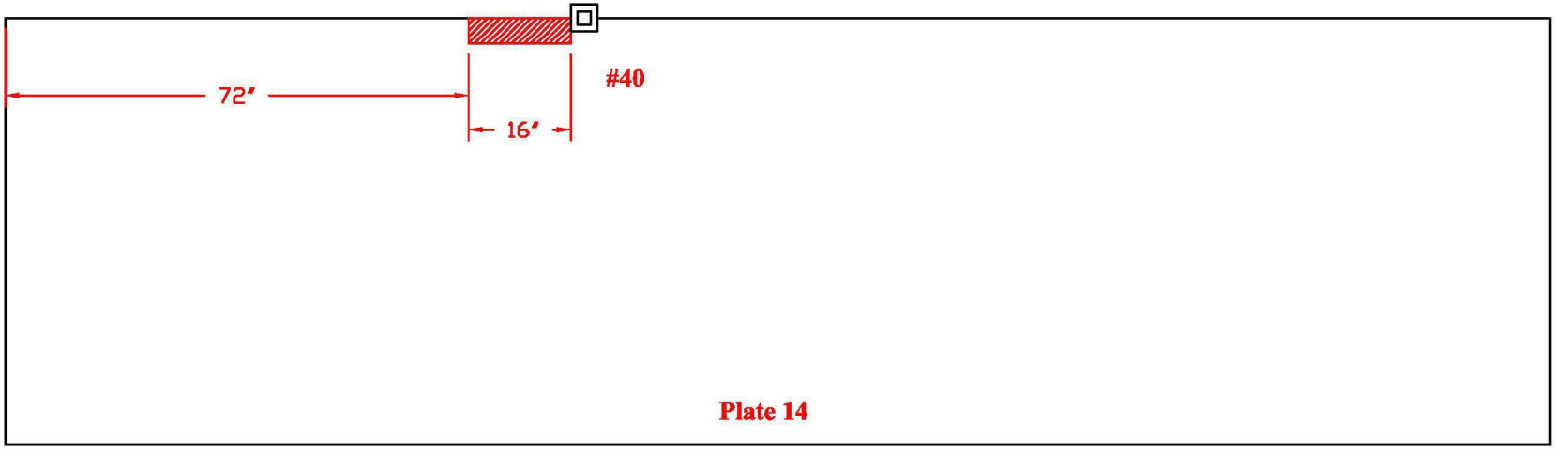

Drawing is not to scale

TANK # 2 - QUADRANT D - A
Nominal Plate Thickness: 0.250"

Date Inspected/Confirmed: 04/15/2008

Tank Section: Barrel

Course: 27
Plate #: 14

Flaw # - Type - Remaining:

#43 - W.L. - .229"

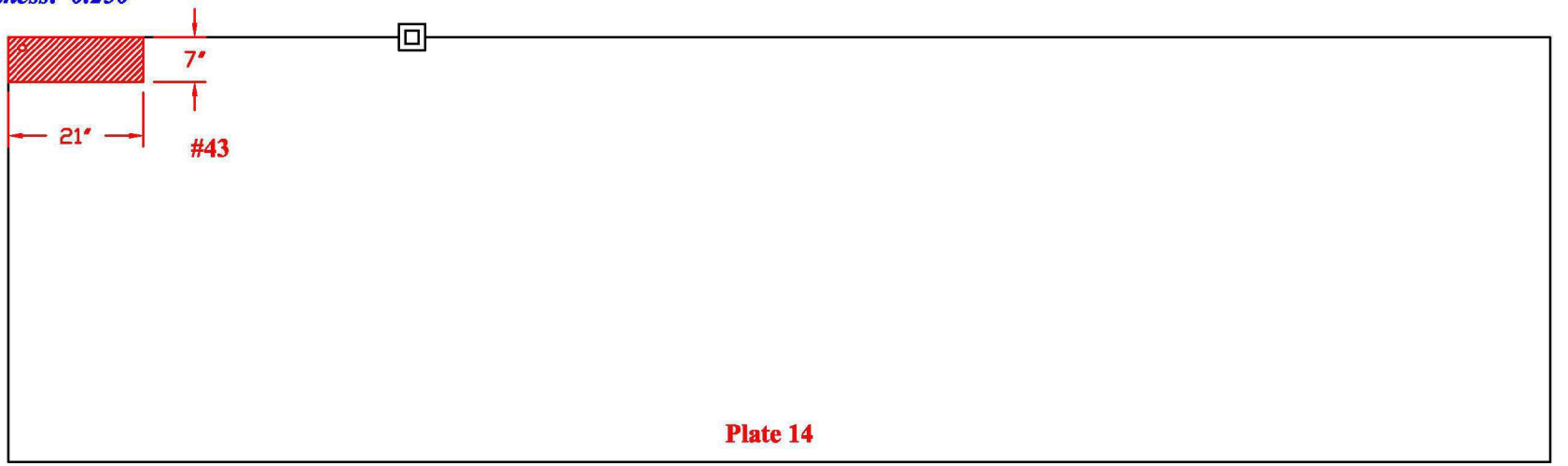

Tank Section: Barrel

Course: 27
Plate #: 15

Flaw # - Type - Remaining:

#44 - W.L. - .230"

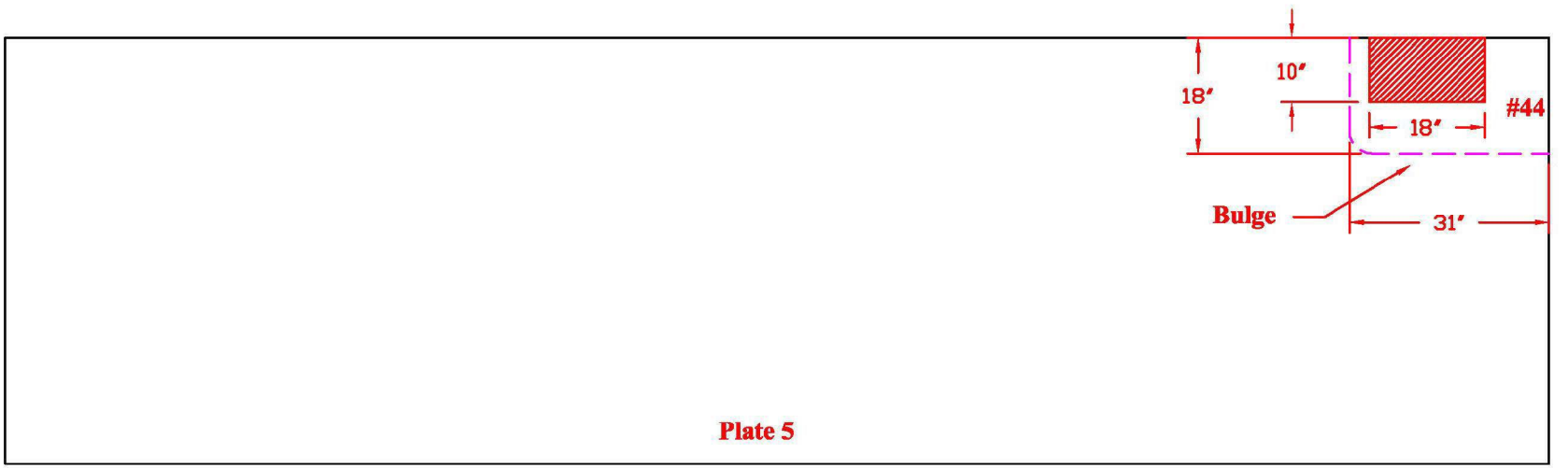

Drawing is not to scale

TANK # 2 - QUADRANT B - D
Nominal Plate Thickness: 0.250"

Date Inspected/Confirmed: 04/16/2008

Tank Section: Barrel

Course: 2
Plate #: 5

Flaw # - Type - Remaining:

#45 - W.L. - .225"

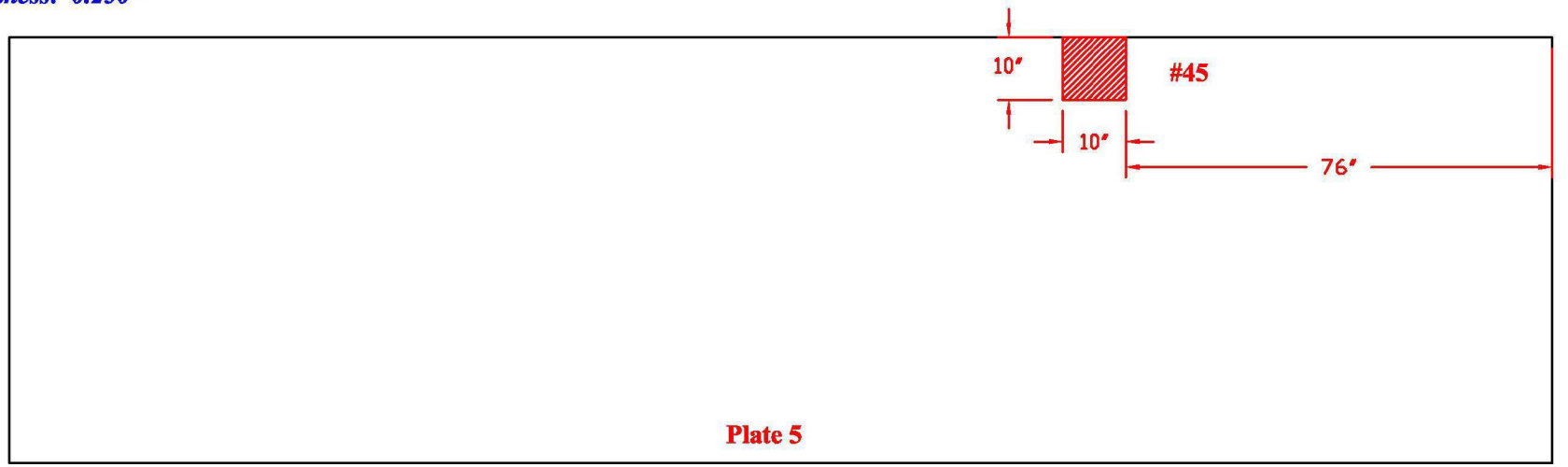

Tank Section: Barrel

Course: 25
Plate #: 12

Flaw # - Type - Remaining:

#46 - W.L. - .230"

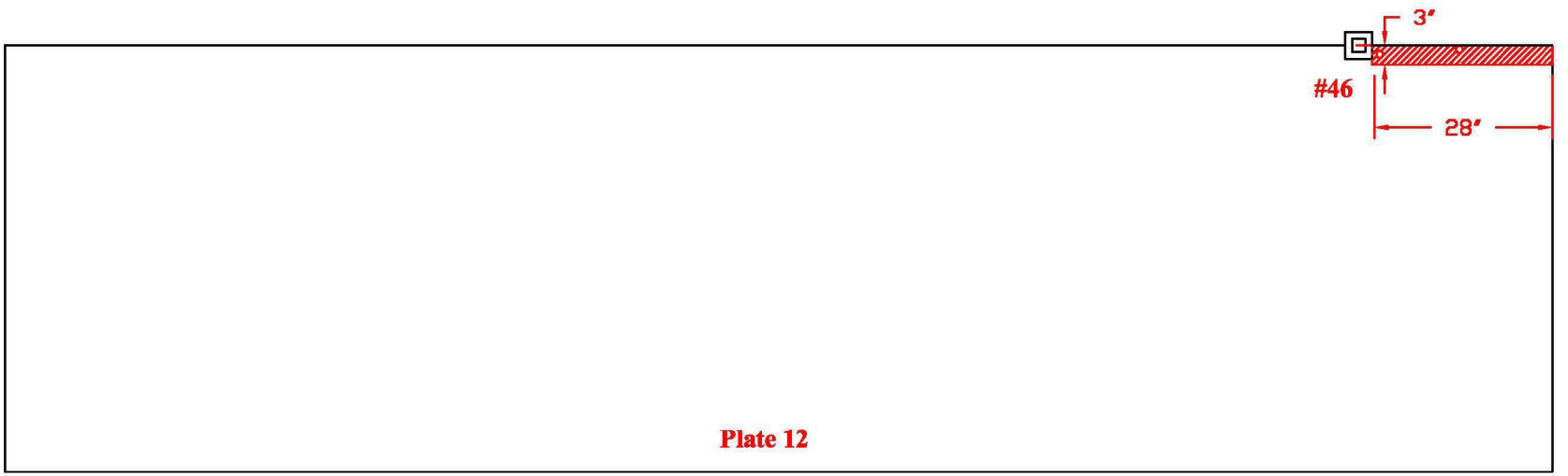

Drawing is not to scale

TANK # 2 - QUADRANT D - B
Nominal Plate Thickness: 0.250"

Date Inspected/Confirmed: 04/16/2008

Tank Section: Barrel

Course: 20
Plate #: 12

Flaw # - Type - Remaining:
#47A - Lack of fusion
.211" depth ¾"long (right)
#47B - Pin hole
.088" depth ⅛"dia (right)
#47C - Lack of fusion
.219" depth 8"long (right)
#47C - Lack of fusion
.221" depth 1"long (left)

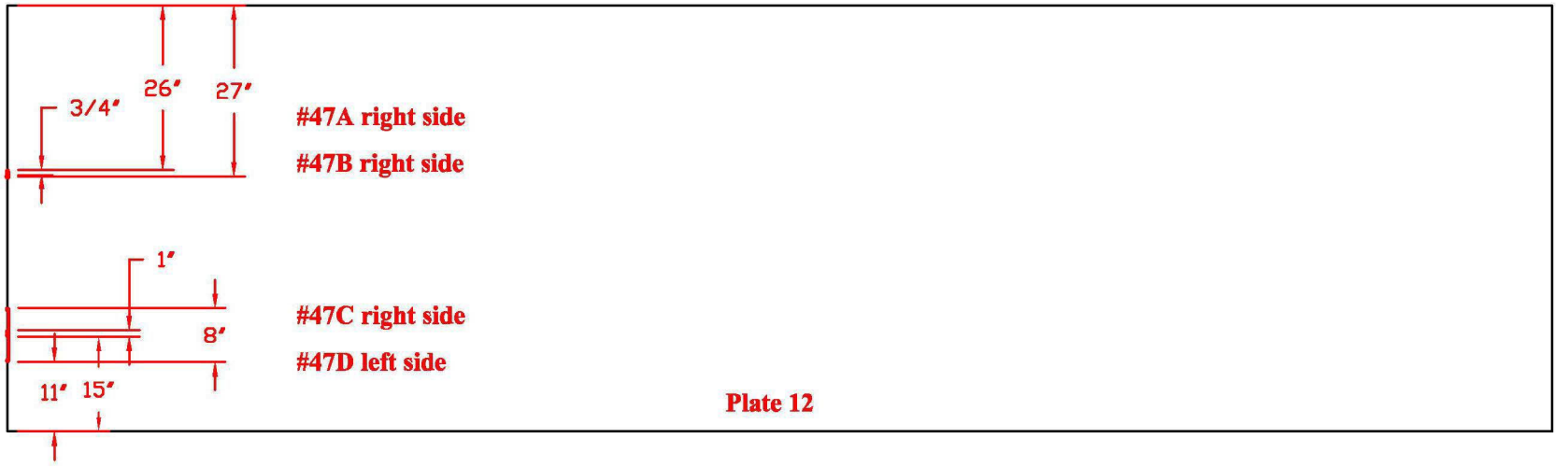

Tank Section: Barrel

Course: 17
Plate #: 5

Flaw # - Type - Remaining:

#48 - W.L. - .232"

Drawing is not to scale

TANK # 2 - QUADRANT B
Nominal Plate Thickness: 0.250"

Date Inspected/Confirmed: 04/17/2008

Tank Section: Barrel

Course: 26
Plate #: 5

Flaw # - Type - Remaining:

#49A - Slag line
.114" depth 2"long

#49B - Lack of fusion
.083" depth 4" long

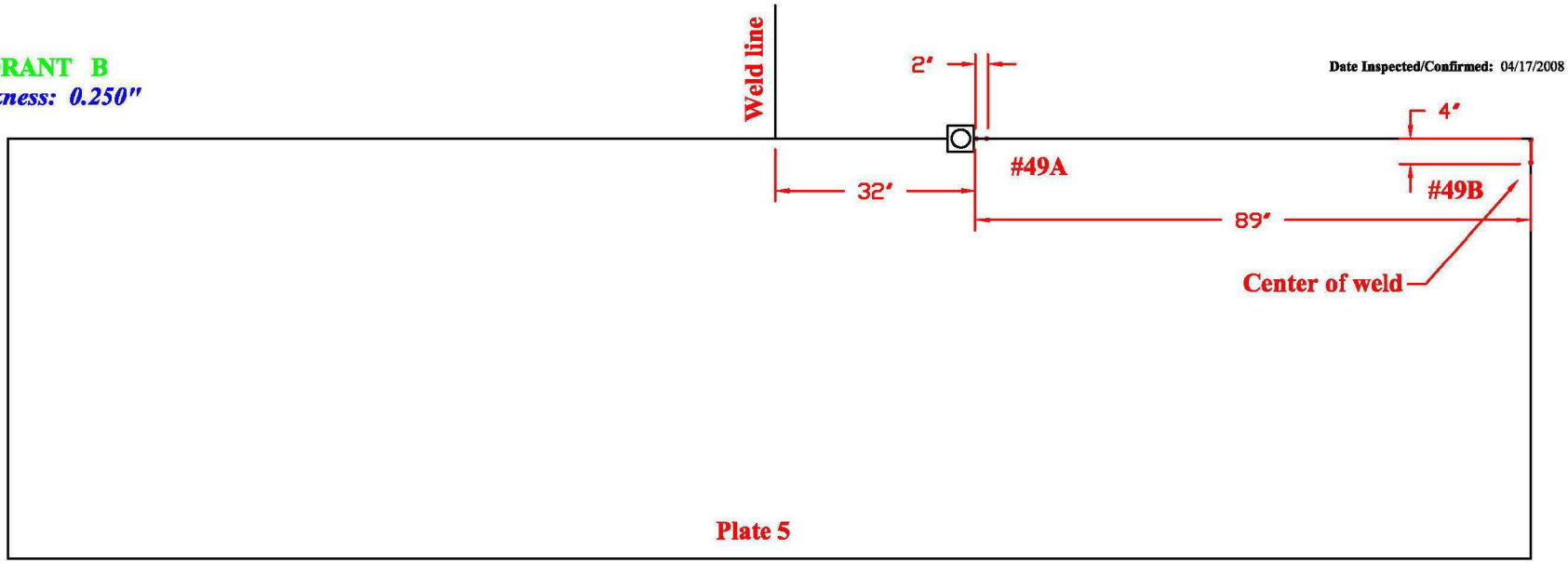

Tank Section: Barrel

Course: 28
Plate #: 5

Flaw # - Type - Remaining:

#50 - Lack of fusion
.104" depth 4" long

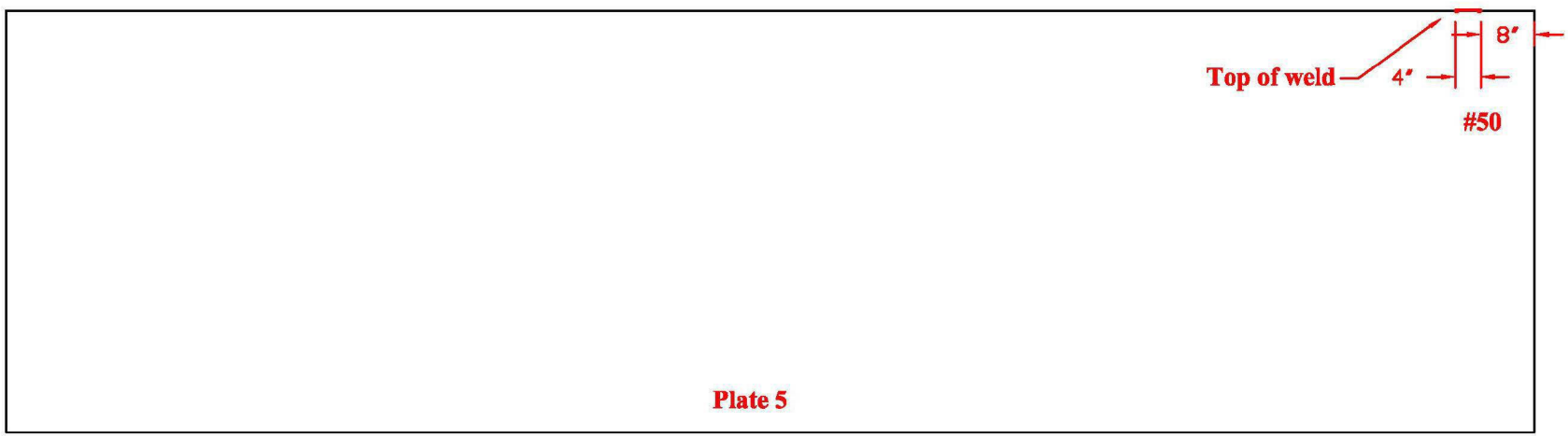

Drawing is not to scale

TANK # 2 - QUADRANT B
Nominal Plate Thickness: 0.250"

Date Inspected/Confirmed: 04/17/2008

Tank Section: Barrel

Course: 26
Plate #: 6

Flaw # - Type - Remaining:

#51 - W.L./Pit - .220"

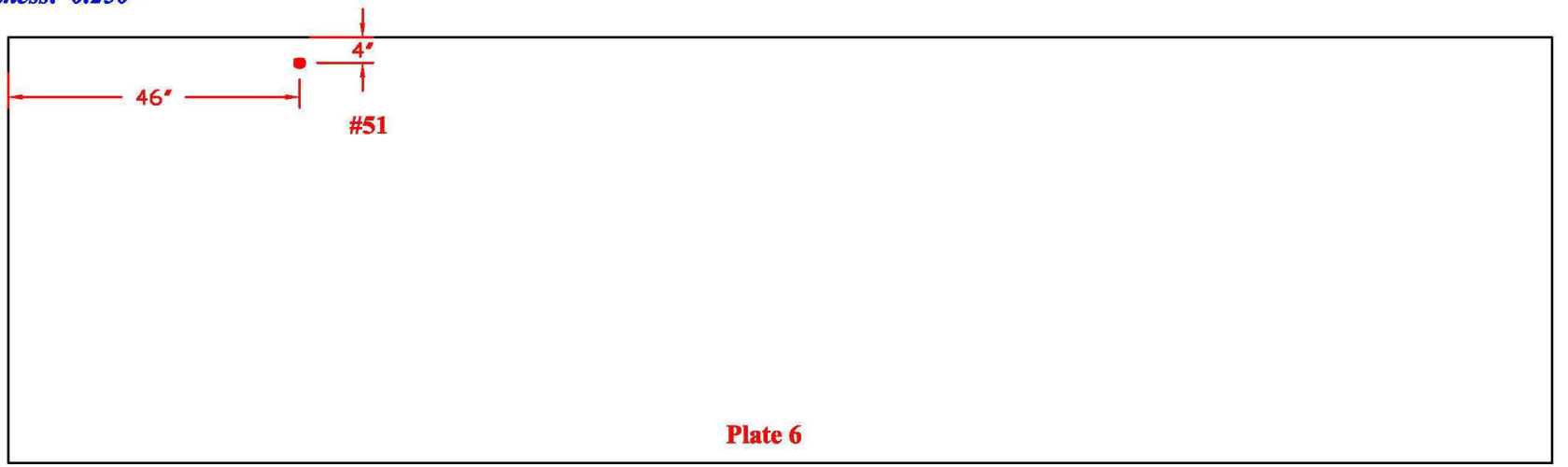

Tank Section: Barrel

Course: 22
Plate #: 6

Flaw # - Type - Remaining:

#52A - Lack of fusion
.169" depth 4 1/2" long (left side)
#52B - Lack of fusion
.154" depth 4 1/2" long (right side)

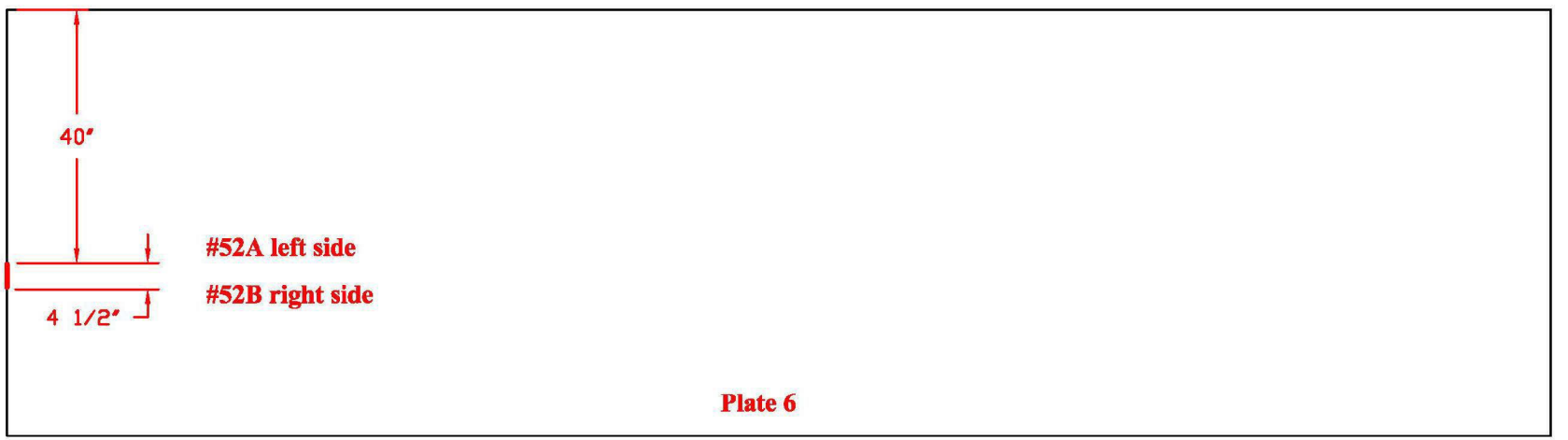

Drawing is not to scale

TANK # 2 - QUADRANT B

Nominal Plate Thickness: 0.250"

Date Inspected/Confirmed: 04/17/2008

Tank Section: Barrel

Course: 19
Plate #: 6

Flaw # - Type - Remaining:

#53 - W.L./Pit - .220"

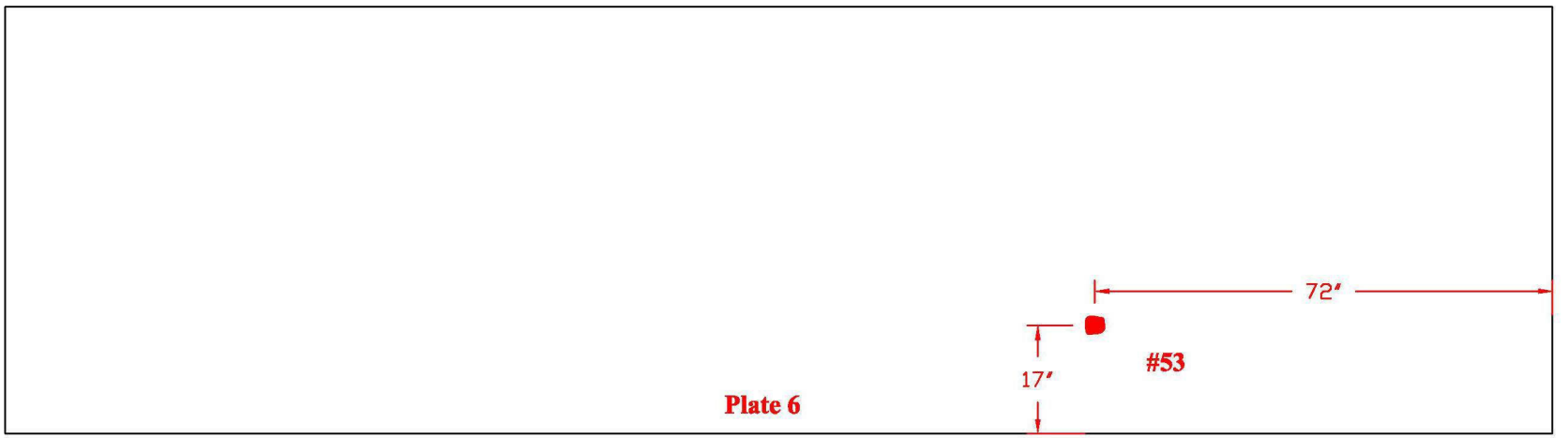

Tank Section: Barrel

Course: 2
Plate #: 6

Flaw # - Type - Remaining:

#54 - Lack of fusion
.219" depth 1 3/4" long
(left side)

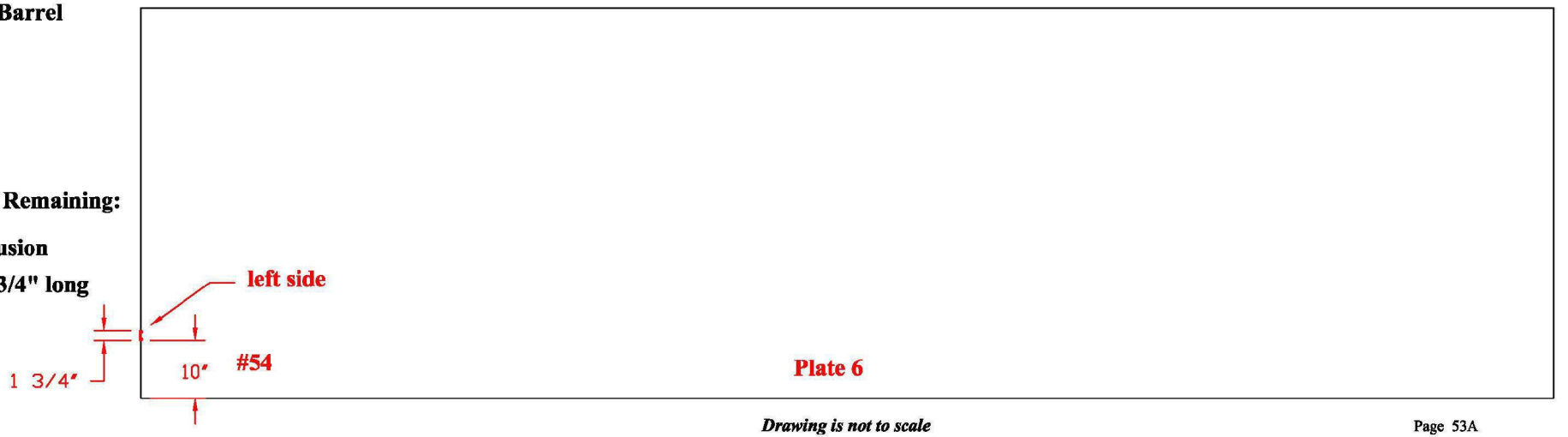

Drawing is not to scale

TANK # 2 - QUADRANT C

Nominal Plate Thickness: 0.250"

Date Inspected/Confirmed: 04/17/2008

Tank Section: Barrel

Course: 6
Plate #: 8

Flaw # - Type - Remaining:

#56 - W.L. - .225"

#57 - W.L. - .229" A
.231" B

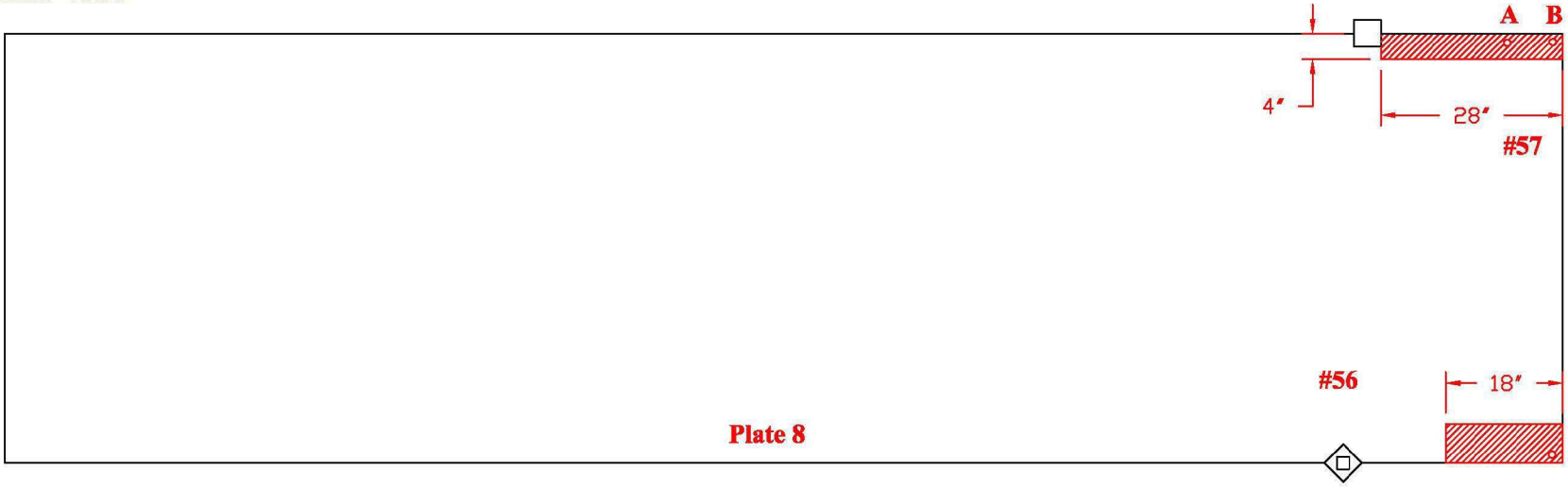

Tank Section: Barrel

Course: 1
Plate #: 9

Flaw # - Type - Remaining:

#58 - W.L. - .200"
on patch plate

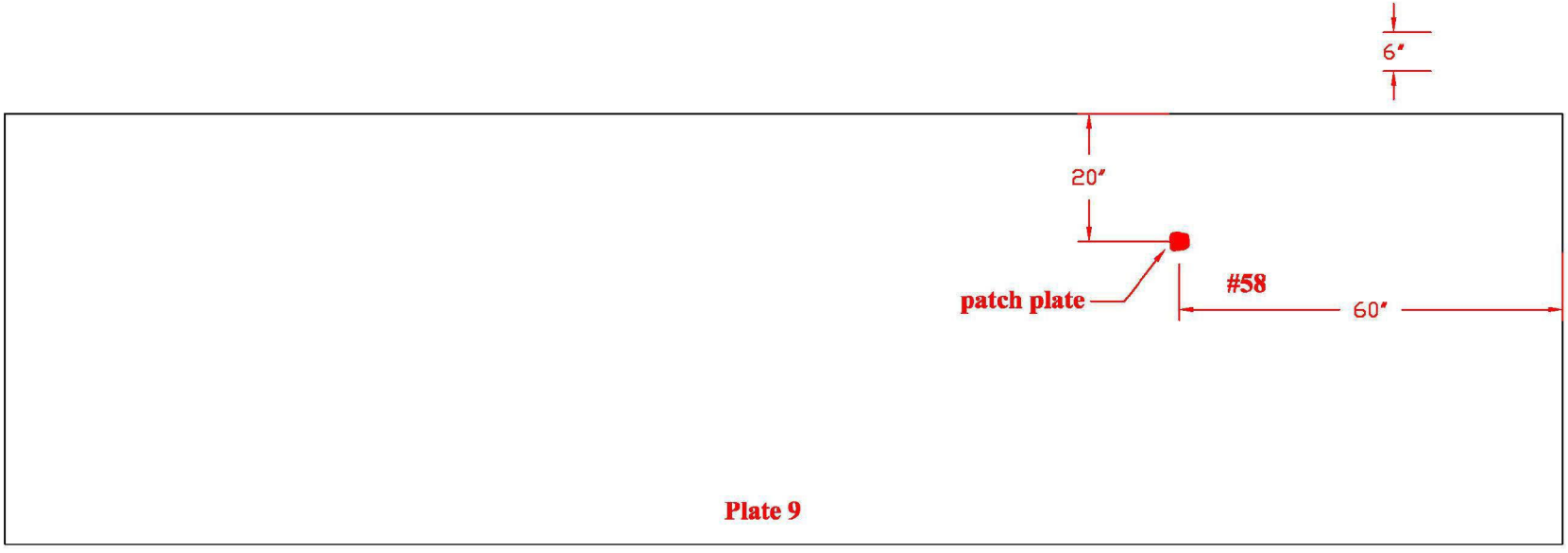

Drawing is not to scale

TANK # 2 - QUADRANT C

Nominal Plate Thickness: 0.250"

Date Inspected/Confirmed: 04/23/2008

Tank Section: Barrel

Course: 22
Plate #: 9

Flaw # - Type - Remaining:

#59 - W.L. - .186"

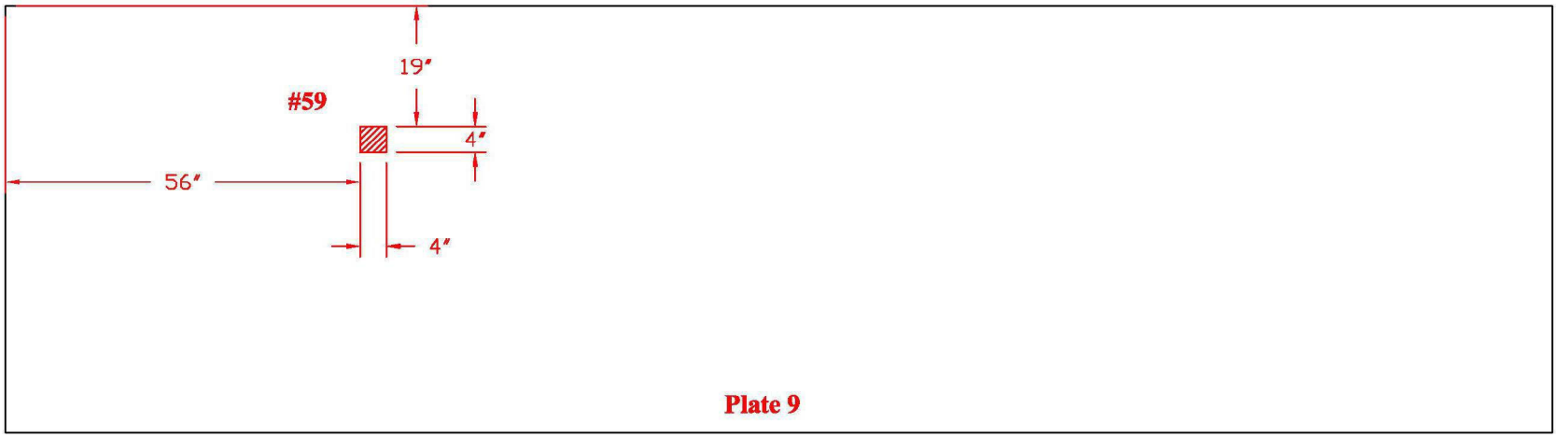

Tank Section: Barrel

Course: 23
Plate #: 9

Flaw # - Type - Remaining:

#55 - W.L. - .228"

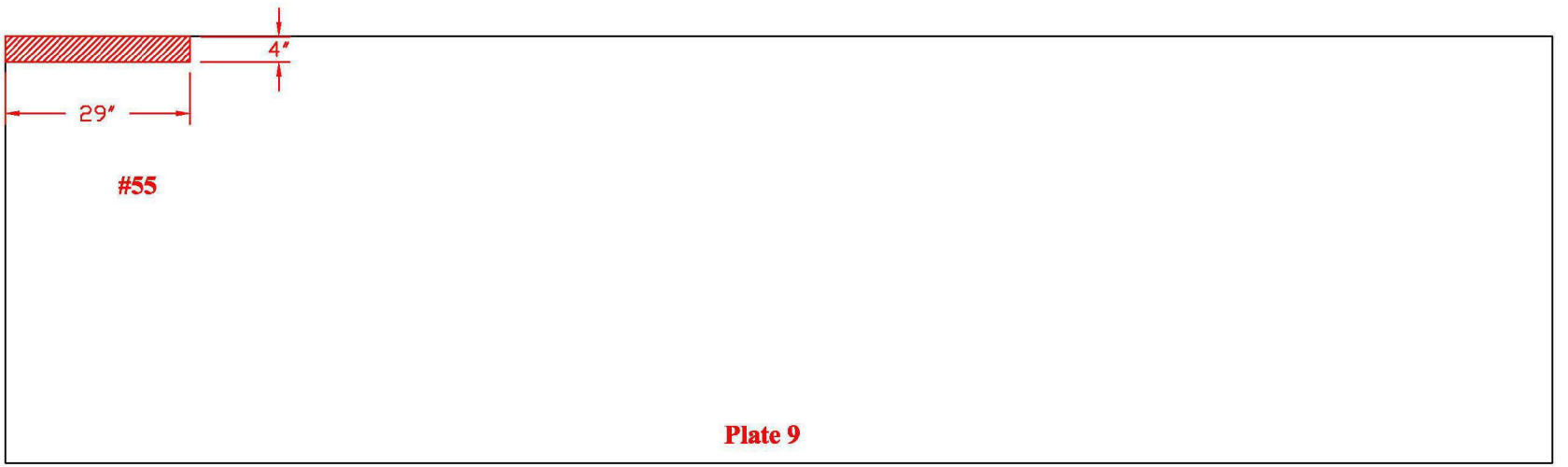

Drawing is not to scale

TANK #2 - QUADRANT C

Nominal Plate Thickness: 0.250"

Date Inspected/Confirmed: 04/24/2008

Tank Section: Upper dome
Quadrant: C
Course: A
Plate: # 41

Flaw # 60 - Dent
.165 deep 1½" dia N.S.W.L.

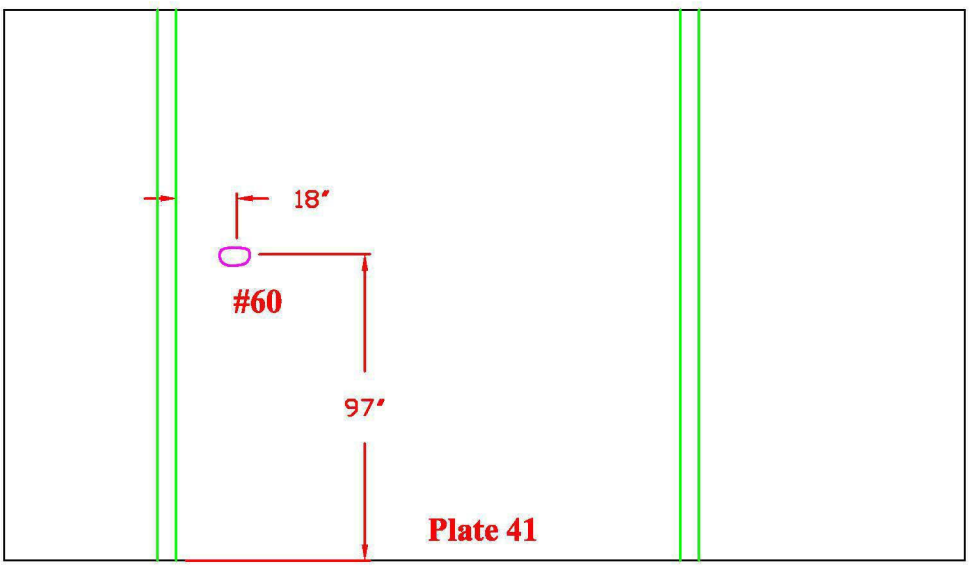

Tank Section: Upper dome
Quadrant: C
Course: A
Plate: # 46

Flaw # 61A - Dent
.215 deep 1½"-2" dia N.S.W.L.

Flaw # 61B - Dent
.095 deep 1½"-2" dia N.S.W.L.

Flaw # 61C - Dent
.265 deep 1½"-2" dia N.S.W.L.

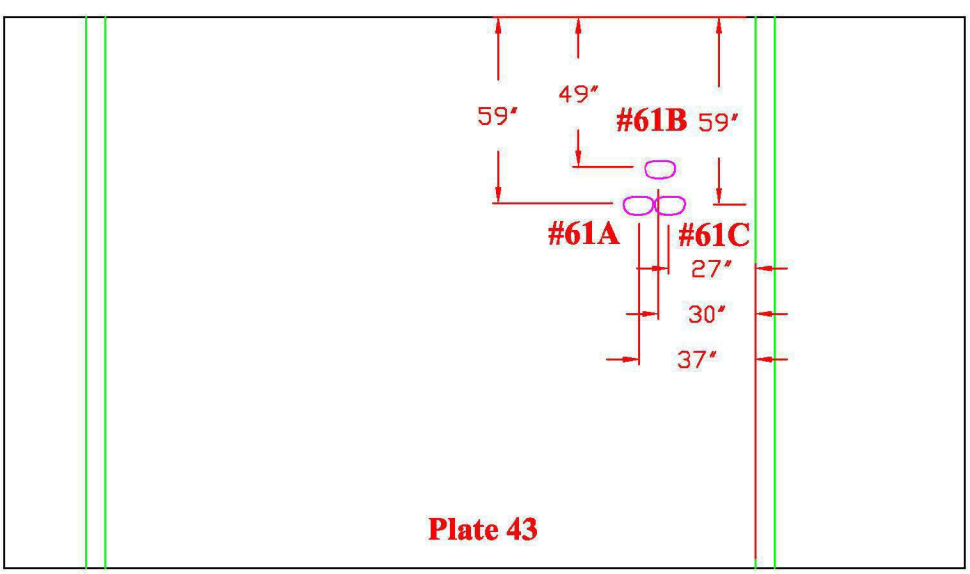

Drawing is not to scale

TANK #2 - QUADRANT C

Nominal Plate Thickness: 0.250"

Date Inspected/Confirmed: 04/24/2008

Tank Section: Upper dome
Quadrant: C
Course: A
Plate: # 38

Flaw # 62 - Dent
.480 deep 2" dia N.S.W.L.

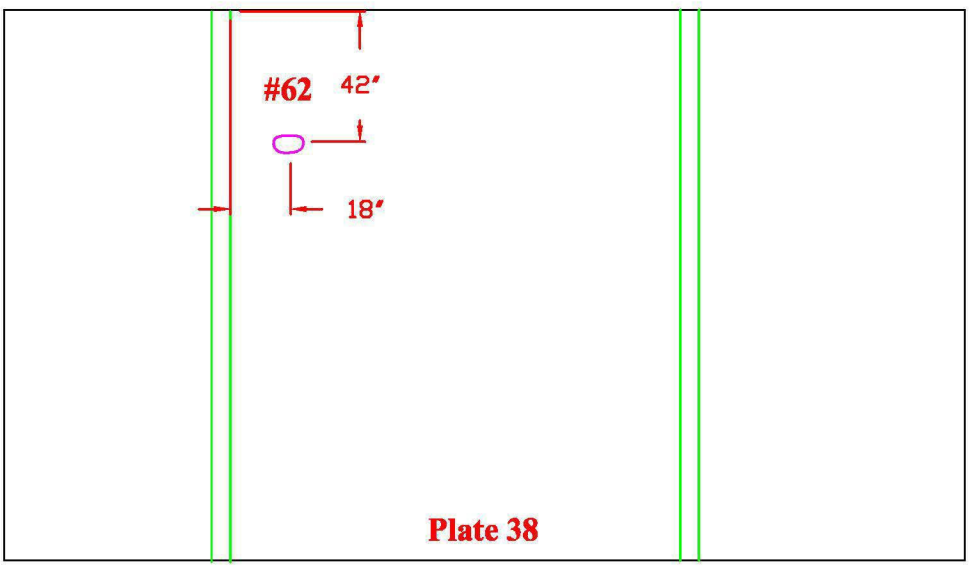

Tank Section: Upper dome
Quadrant: C
Course: A
Plate: # 42

Flaw # 63A - Dent
.130 deep 1½"-2" dia N.S.W.L.

Flaw # 63B - Dent
.170 deep 1½"-2" dia N.S.W.L.

Flaw # 63C - Dent
.155 deep 1½"-2" dia N.S.W.L.

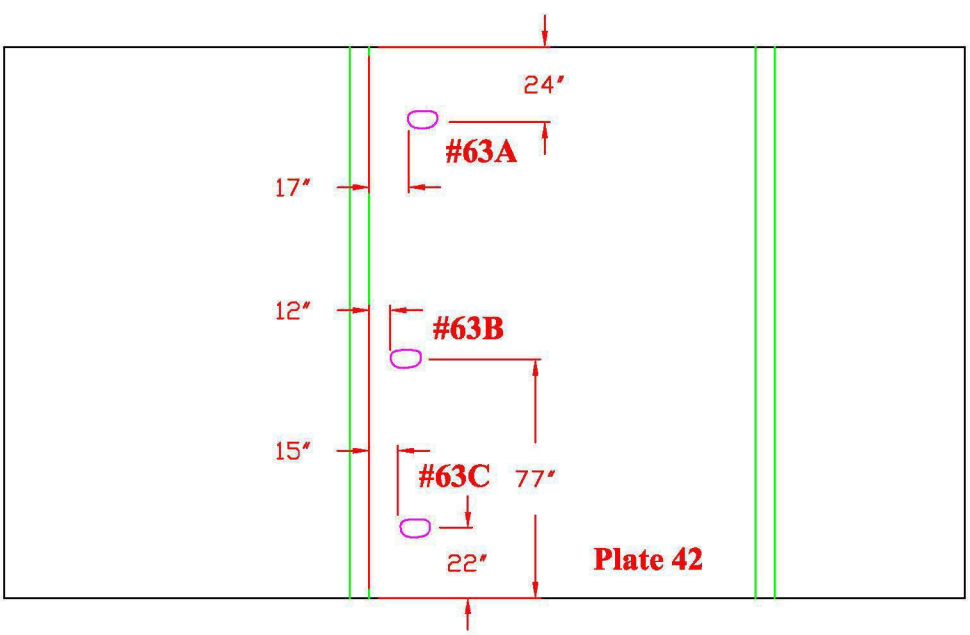

Drawing is not to scale

TANK #2 - QUADRANT C

Nominal Plate Thickness: 0.250"

Date Inspected/Confirmed: 04/24/2008

Tank Section: Upper dome
Quadrant: C
Course: A
Plate: # 44

Flaw # 64 - Dent
.115 deep 2" dia N.S.W.L.

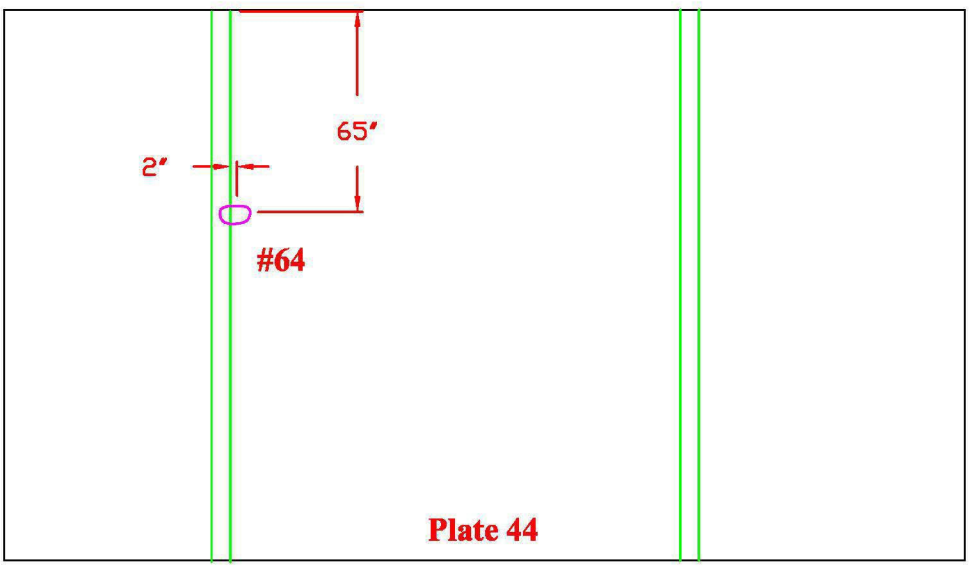

Tank Section: Upper dome
Quadrant: C
Course: B
Plate: # 41

Flaw # 66A - Dent
.065 deep 1½" dia N.S.W.L.

Flaw # 66B - Dent
.025 deep 1½" dia N.S.W.L.

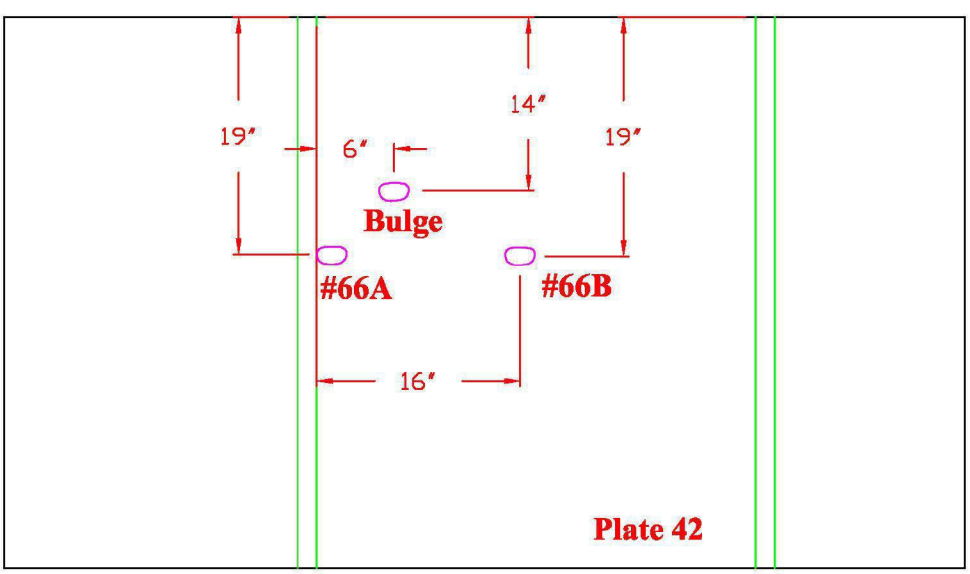

Drawing is not to scale

TANK #2 - QUADRANT C - B

Nominal Plate Thickness: 0.250"

Date Inspected/Confirmed: 04/28/2008

Tank Section: Upper dome
Quadrant: C
Course: A
Plate: # 52

Flaw # 65 - Dent
.085 deep 1 1/2" dia N.S.W.L.

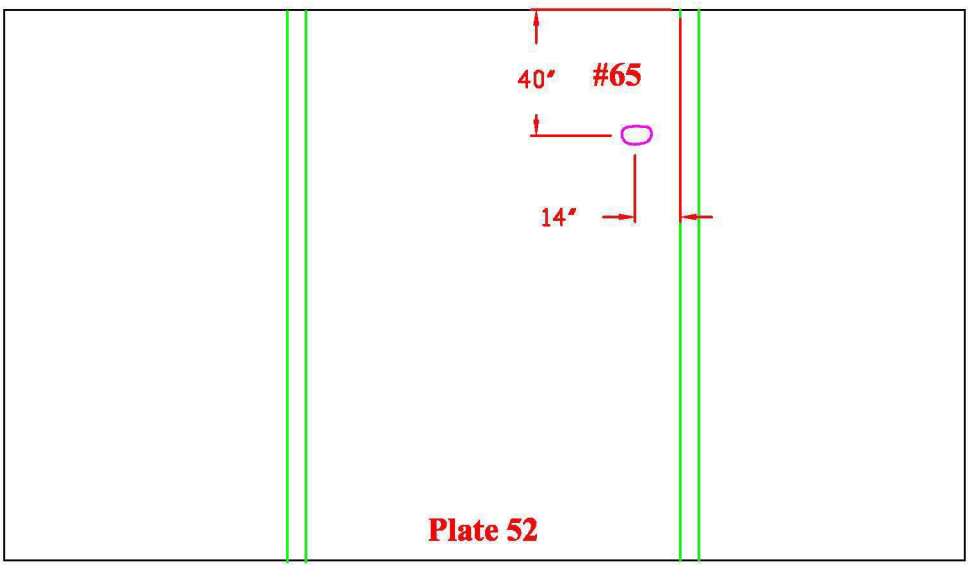

Tank Section: Upper dome
Quadrant: B
Course: C
Plate: # 14

Flaw # 67A - Patch
.141 Remaining

Flaw # 67B - W.L.
.185 Remaining

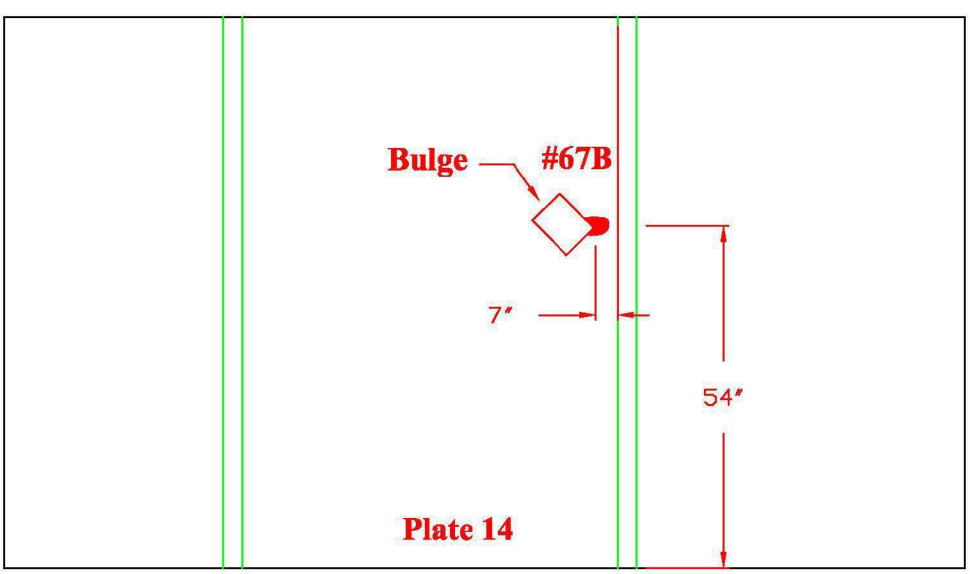

Drawing is not to scale

TANK #2 - QUADRANT B

Nominal Plate Thickness: 0.250"

Date Inspected/Confirmed: 05/01/2008

Tank Section: Upper dome
Quadrant: B
Course: B
Plate: # 31

Flaw # 68 - Dent
.300 deep 6" dia N.S.W.L.

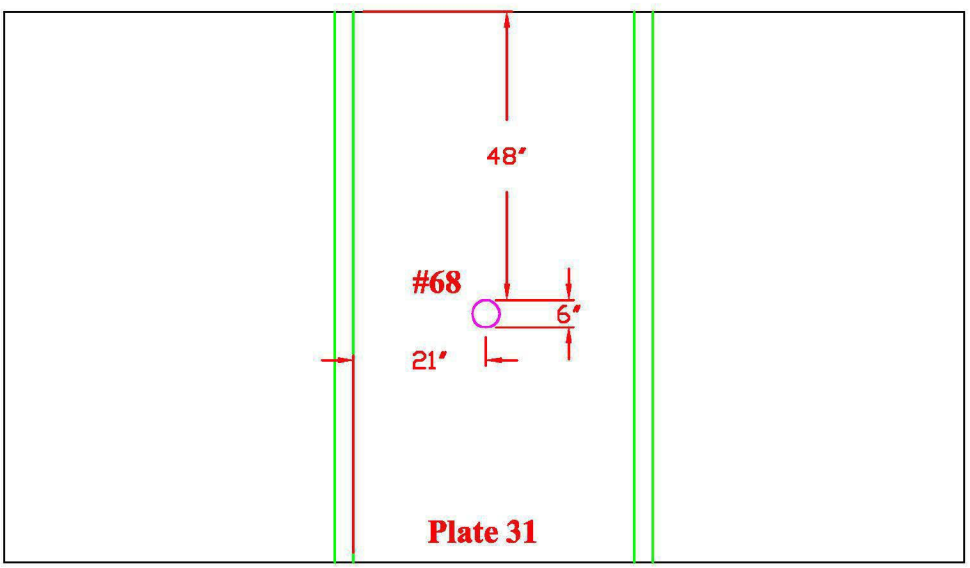

Tank Section: Upper dome
Quadrant: B
Course: A
Plate: # 25

Flaw # 69 - Patch
.120 deep 1 ½" dia N.S.W.L.

Flaw # 70 - Dent
.200 deep 2 ½" dia N.S.W.L.

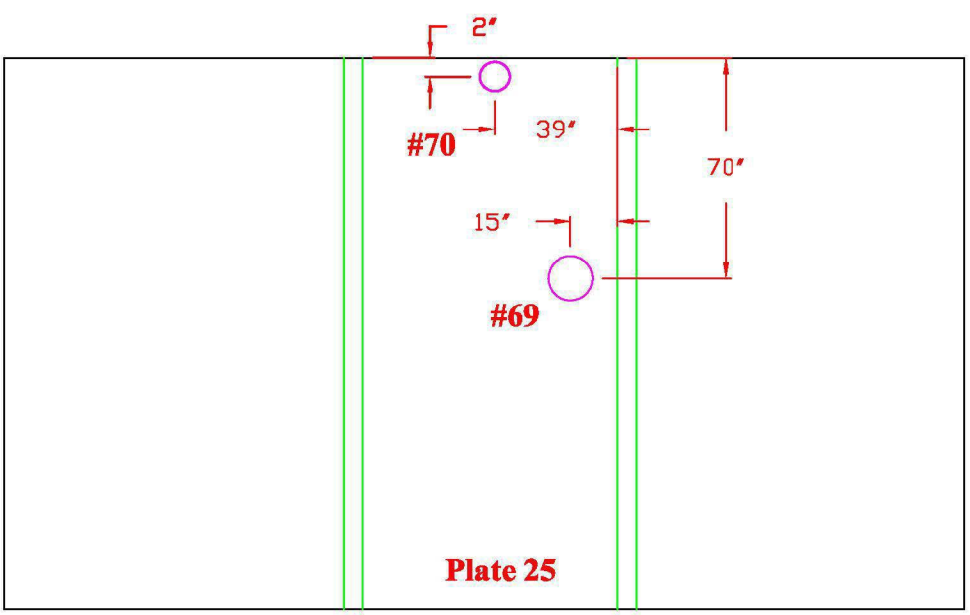

Drawing is not to scale

TANK #2 - QUADRANT B

Nominal Plate Thickness: 0.250"

Date Inspected/Confirmed: 05/01/2008

Tank Section: Upper dome
Quadrant: B
Course: A
Plate: # 33

Flaw # 71 - Dent
.320 deep 3" dia N.S.W.L.

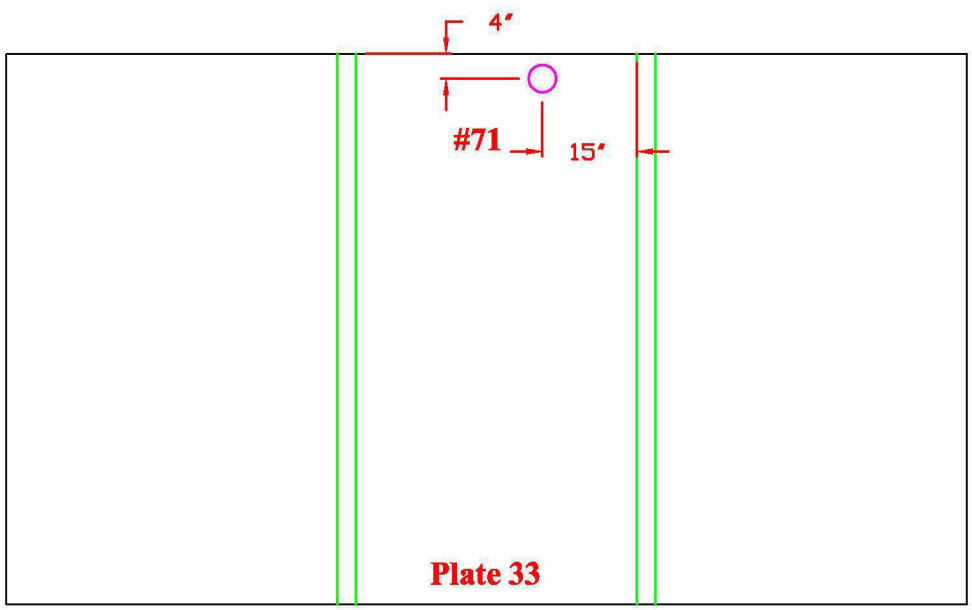

Tank Section: Upper dome
Quadrant: B
Course: A
Plate: # 32

Flaw # 73 - Dent
.170 deep 2" dia N.S.W.L.

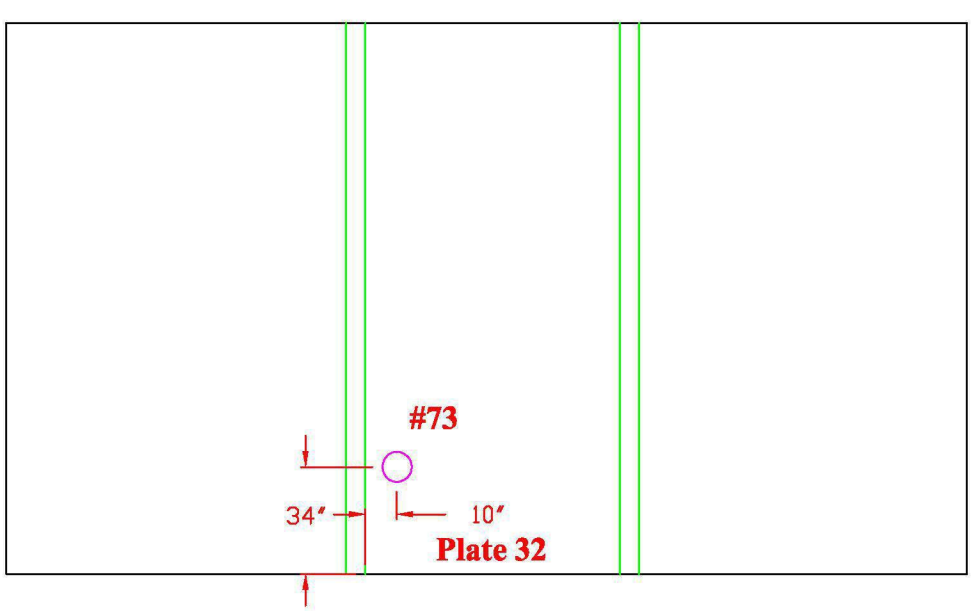

Drawing is not to scale

TANK #2 - QUADRANT B

Nominal Plate Thickness: 0.250"

Date Inspected/Confirmed: 05/01/2008

Tank Section: Upper dome
Quadrant: B
Course: A
Plate: # 27

Flaw # 72 - T.S. Pit
.210" Remaining

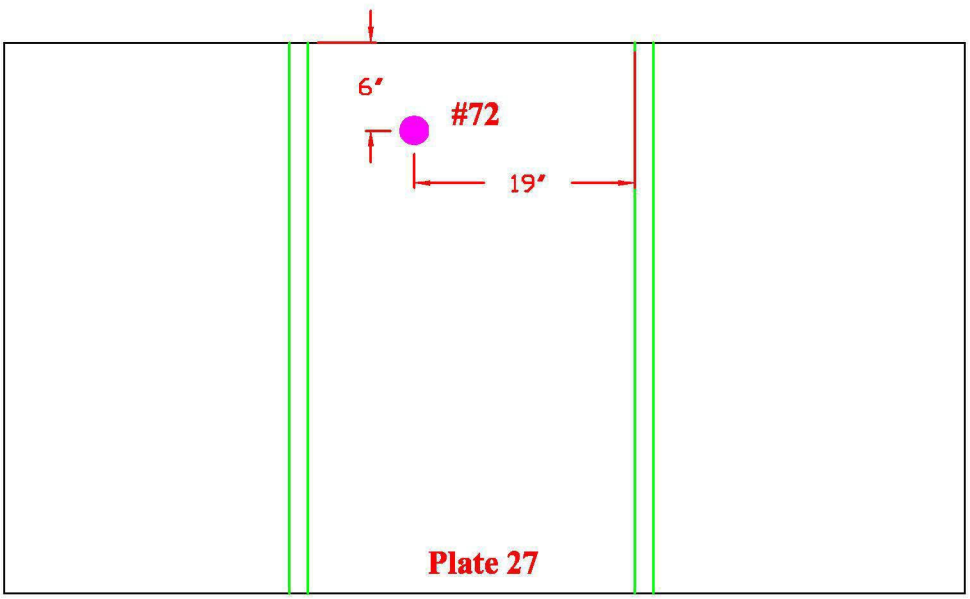

Tank Section: Upper dome
Quadrant: B
Course: B
Plate: # 22

Flaw # 74 - Dent
.260 deep 3" dia N.S.W.L.

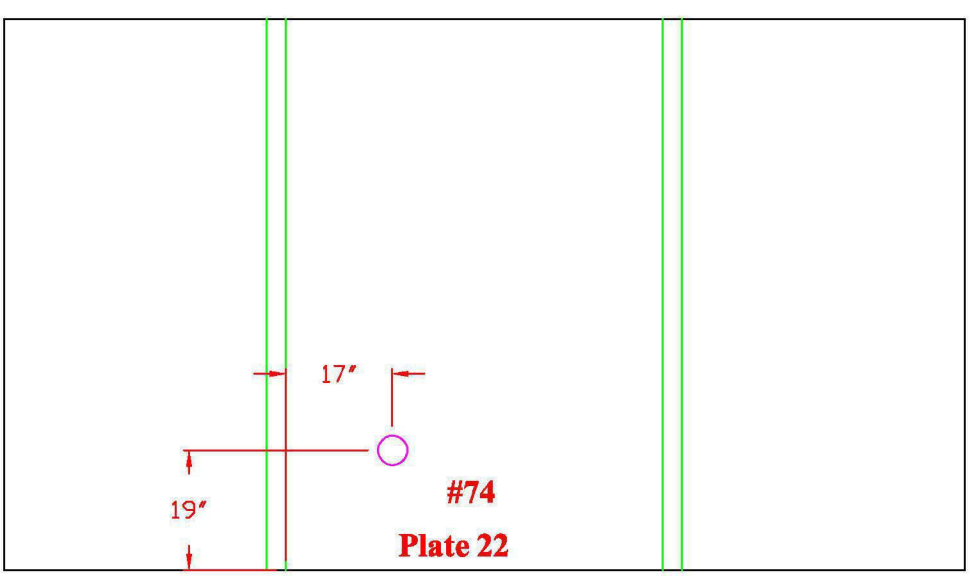

Drawing is not to scale

TANK #2 - QUADRANT A

Nominal Plate Thickness: 0.250"

Date Inspected/Confirmed: 05/01/2008

Tank Section: Upper dome
Quadrant: A
Course: B
Plate: # 3

Flaw # 75 - Dent
.250" deep 1½"-2" dia
N.S.W.L.

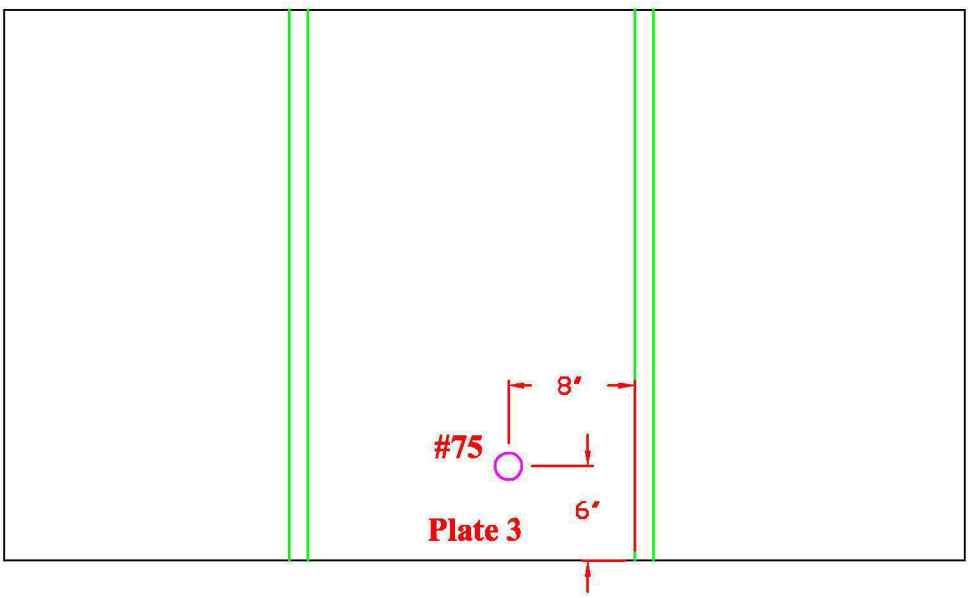

Tank Section: Upper dome
Quadrant: A
Course: B
Plate: # 1

Flaw # 76 - Thru Wall Pit
.232 depth 3/16" dia

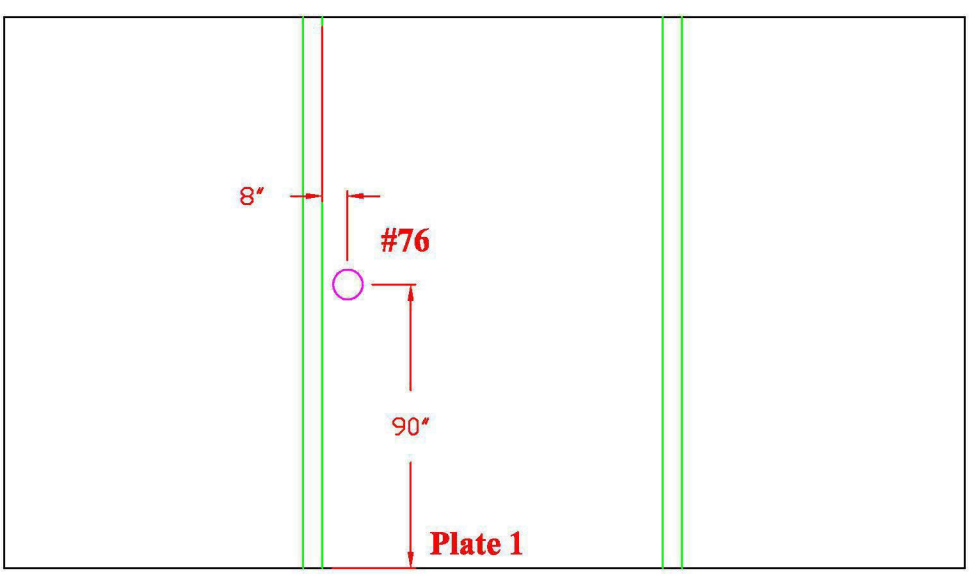

Drawing is not to scale

TANK #2 - QUADRANT A

Nominal Plate Thickness: 0.250"

Date Inspected/Confirmed: 05/01/2008

Tank Section: Upper dome
Quadrant: A
Course: A
Plate: # 4

Flaw # 77 - Dent
.165" deep 3" dia
N.S.W.L.

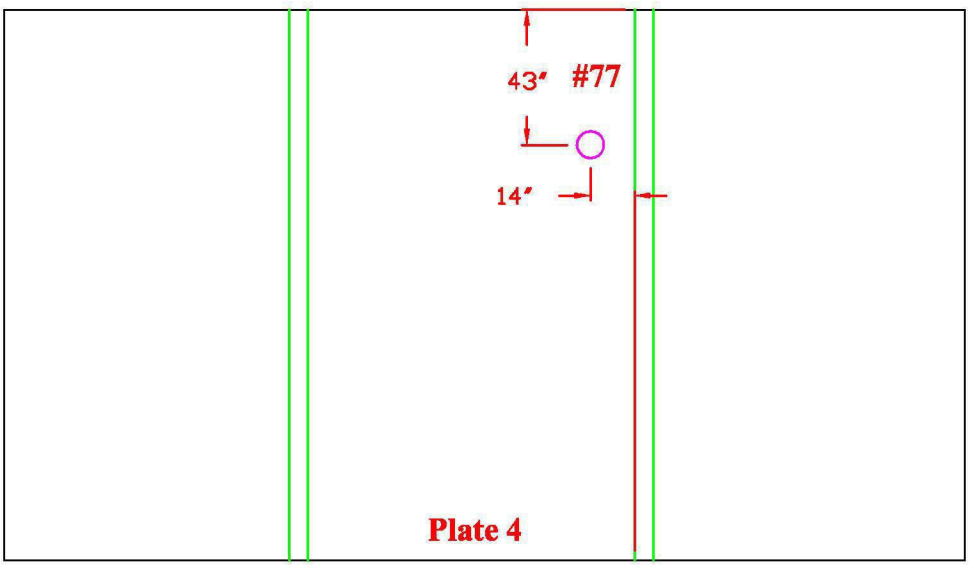

Tank Section: Upper dome
Quadrant: A
Course: C
Plate: # 6

Flaw # 79 - W.L.
.210 Remaining

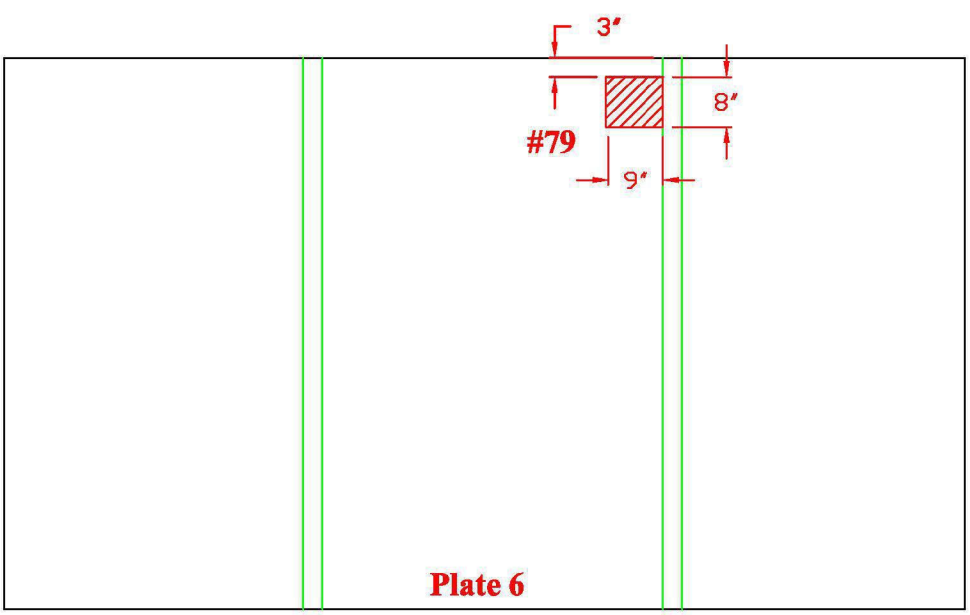

Drawing is not to scale

TANK #2 - QUADRANT C

Nominal Plate Thickness: 0.250"

Date Inspected/Confirmed: 04/24/2008

Tank Section: Upper dome
Quadrant: C
Course: A
Plate: # 48

Flaw # 80A - Dent
.255" deep 1 1/2" - 2" dia
N.S.W.L.

Flaw # 80B - Dent
.140" deep 1 1/2" - 2" dia
N.S.W.L.

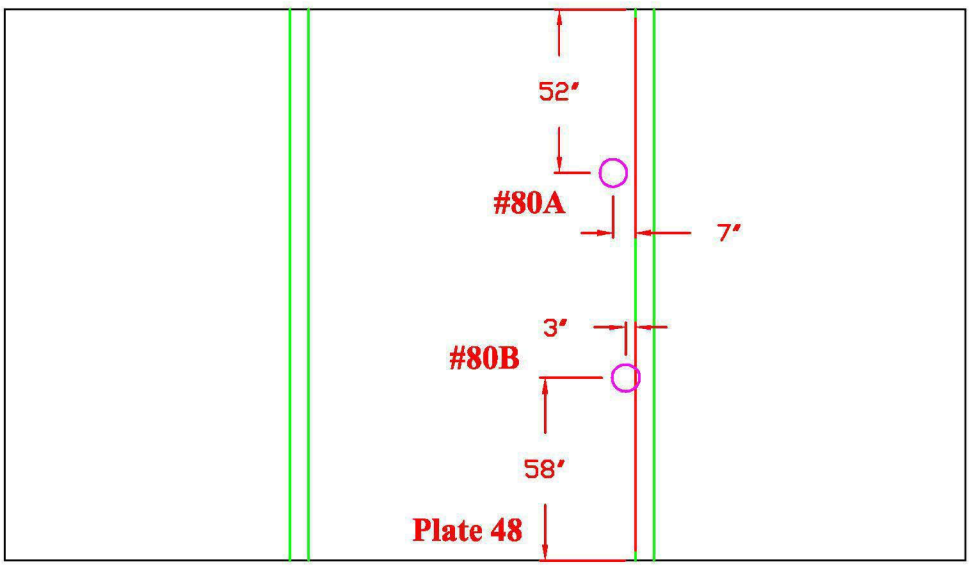

Tank Section: Upper dome
Quadrant: C
Course: C
Plate: # 34

Flaw # 81 - T.S. Pit
.055 deep

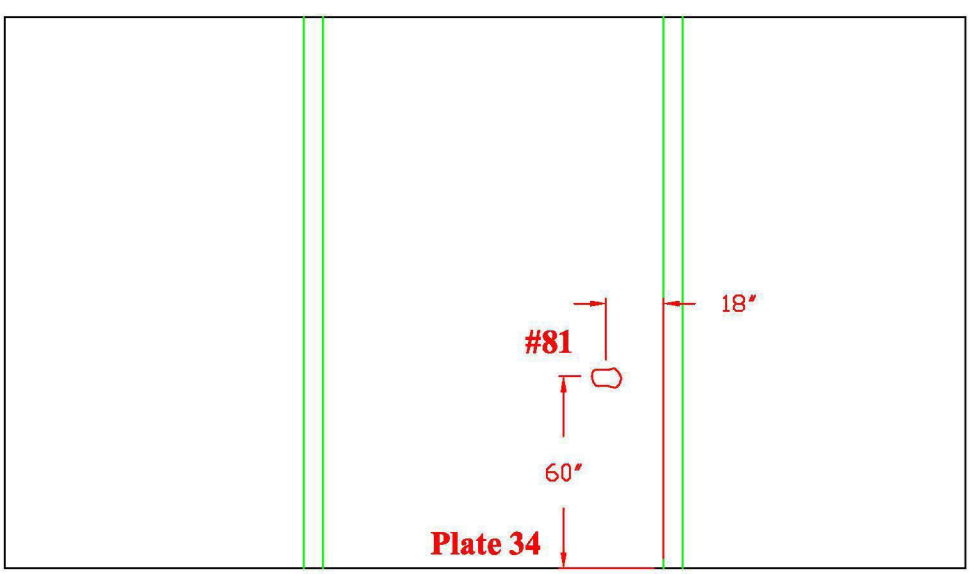

Drawing is not to scale

TANK #2 - QUADRANT A -D

Nominal Plate Thickness: 0.250"

Date Inspected/Confirmed: 05/08/2008

Tank Section: Lower Dome
Quadrant: A
Course: 2
Plate: # 1

Flaw # 123 - Bulge - N.S.W.L.
Shear wave technique was performed on all welds in bulge area.

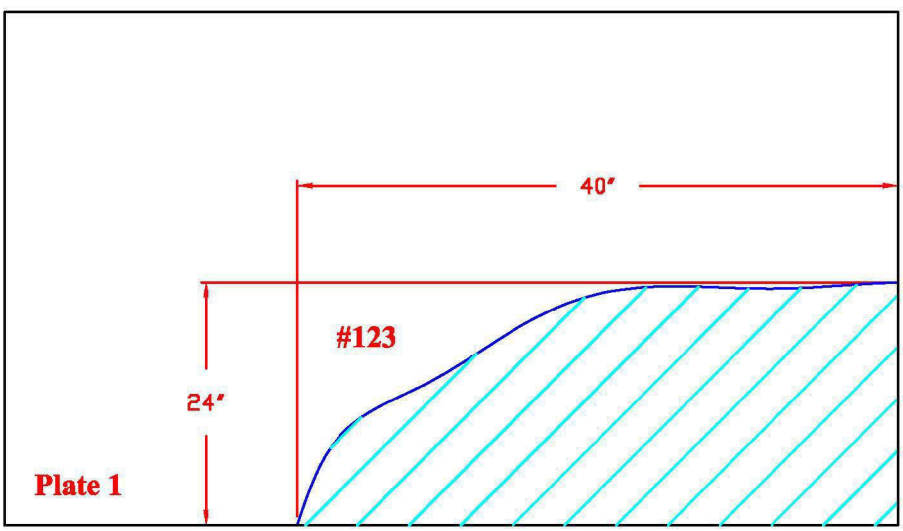

Tank Section: Lower Dome
Quadrant: D
Course: 2
Plate: # 62

Flaw # 124 - Bulge - N.S.W.L.
Shear wave technique was performed on all welds in bulge area.

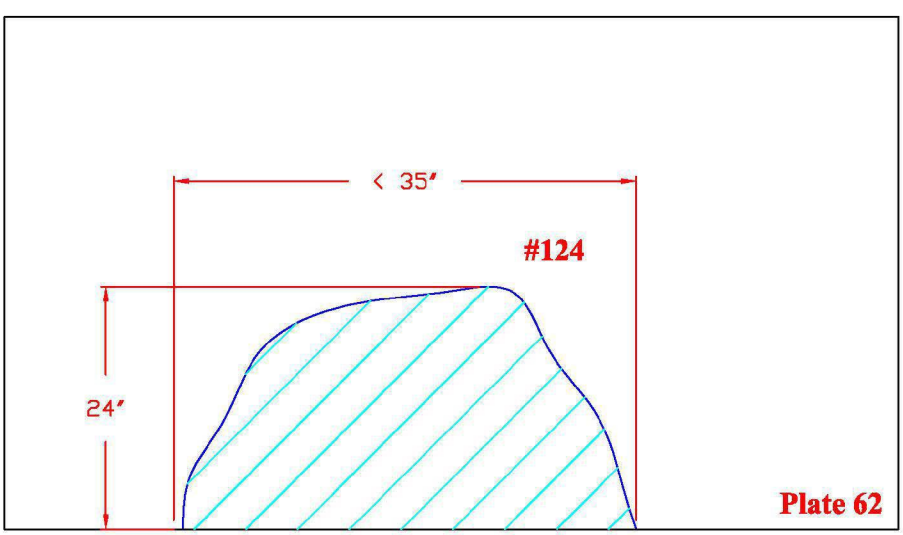

Drawing is not to scale

TANK #2 - QUADRANT A

Nominal Plate Thickness: 0.250"

Date Inspected/Confirmed: 05/08/2008

Tank Section: Lower Dome
Quadrant: A
Course: 1
Plate: # 1-2

Flaw # 125 - Bulge - N.S.W.L. Shear wave technique was performed on all welds in bulge area.

*** Note: This bulge encompassed both plates thru entire lengths.**

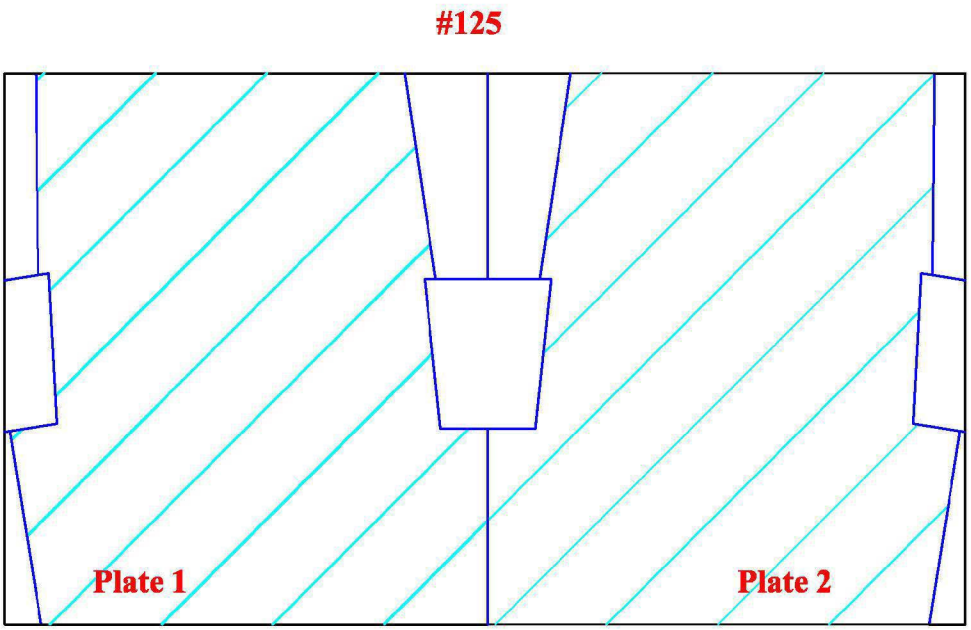

Drawing is not to scale

3.0 Tank Maps
Dunkin & Bush, Inc.
Honolulu, HI
Tank # 2 - Lower Dome

TANK # 2 - LOWER DOME - PITTING - FLOOR , COURSE 1

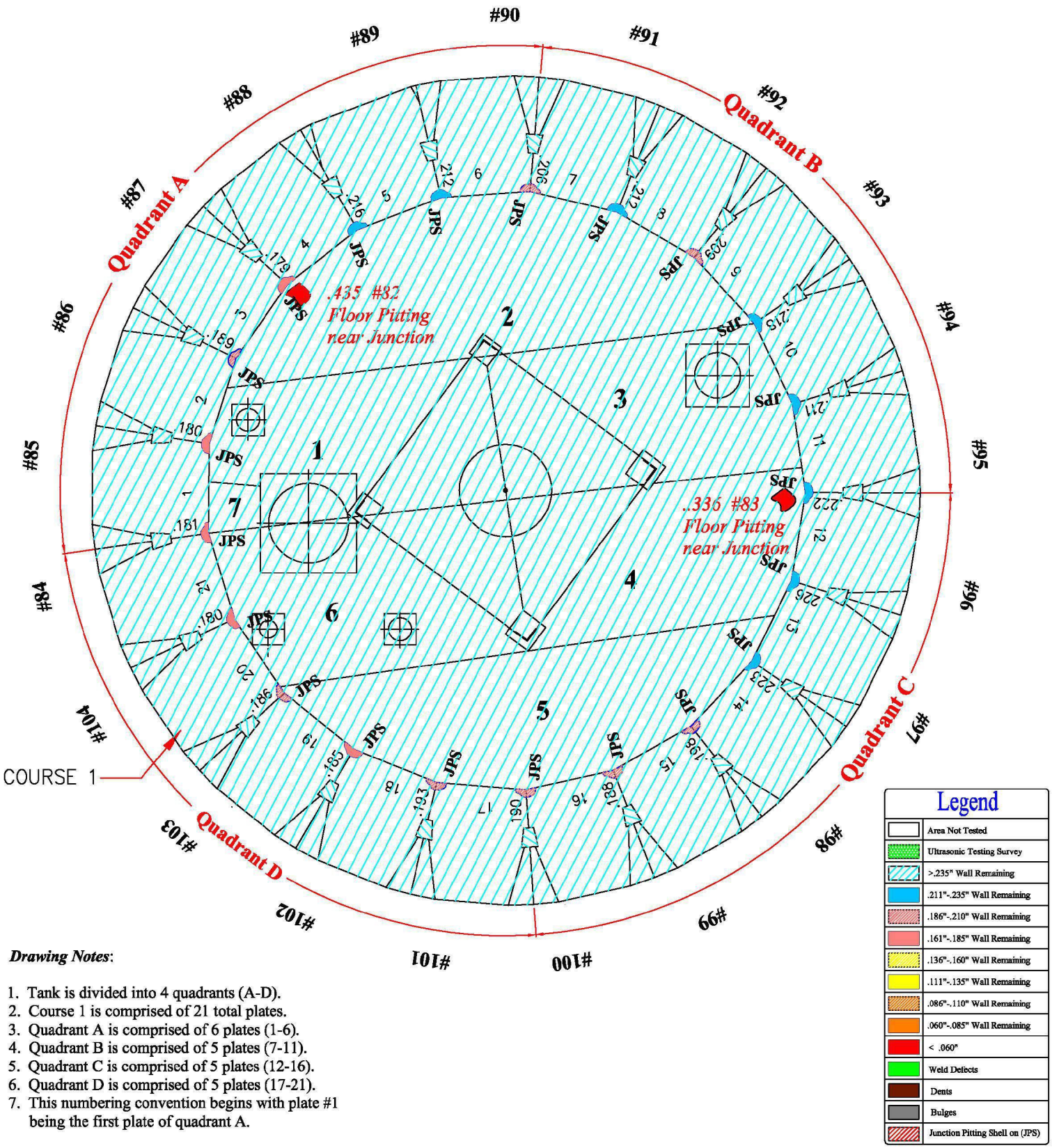

Drawing Notes:

1. Tank is divided into 4 quadrants (A-D).
2. Course 1 is comprised of 21 total plates.
3. Quadrant A is comprised of 6 plates (1-6).
4. Quadrant B is comprised of 5 plates (7-11).
5. Quadrant C is comprised of 5 plates (12-16).
6. Quadrant D is comprised of 5 plates (17-21).
7. This numbering convention begins with plate #1 being the first plate of quadrant A.

Drawing is not to scale

3.0 Tank Maps
Dunkin & Bush, Inc.
Honolulu, HI
Tank # 2 - Lower Dome

TANK # 2 - LOWER DOME - COURSE 1- WELD DEFECTS

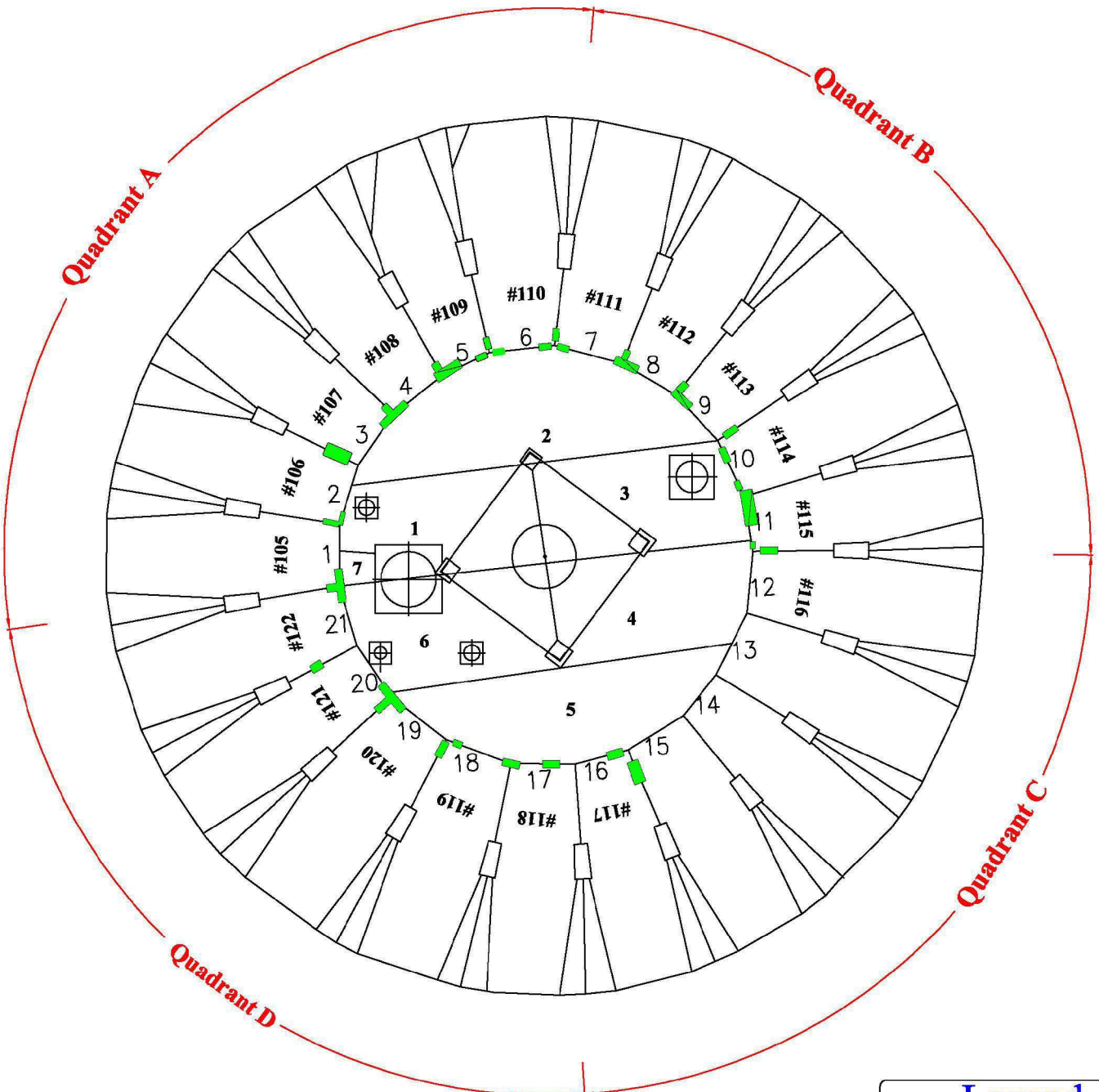

Legend
Weld Defects

Drawing Notes:

1. Tank is divided into 4 quadrants (A-D).
2. Course 1 is comprised of 21 total plates.
3. This numbering convention begins with plate #1 being the first plate of quadrant A.

Drawing is not to scale

TANK # 2 - LOWER DOME - COURSE 2, 3 AND 4

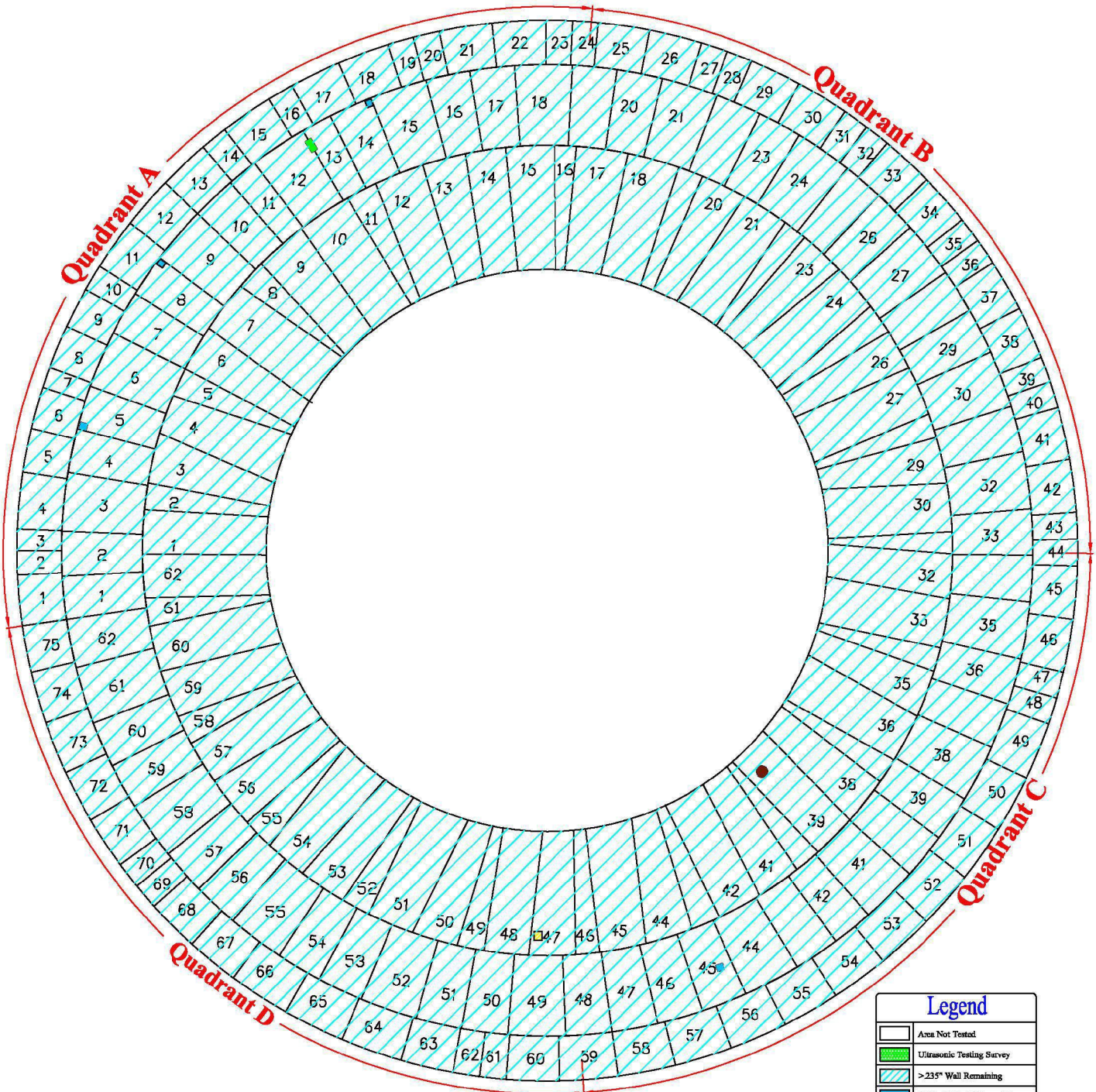

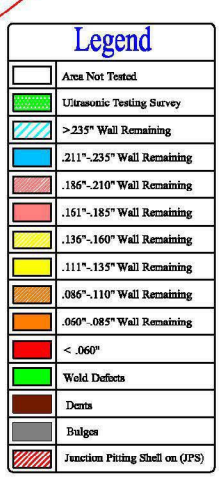

Drawing Notes:

1. Tank is divided into 4 quadrants .
2. Course 2 is comprised of 62 plates .
3. Course 3 is comprised of 62 plates .
4. Course 4 is comprised of 75 plates .
5. This numbering convention begins with plate #1 being the first plate of quadrant A.

Drawing is not to scale

3.0 TANK MAPS
Dunkin & Bush, Inc.
Honolulu, HI

TANK # 2 - QUADRANT A - SECTION

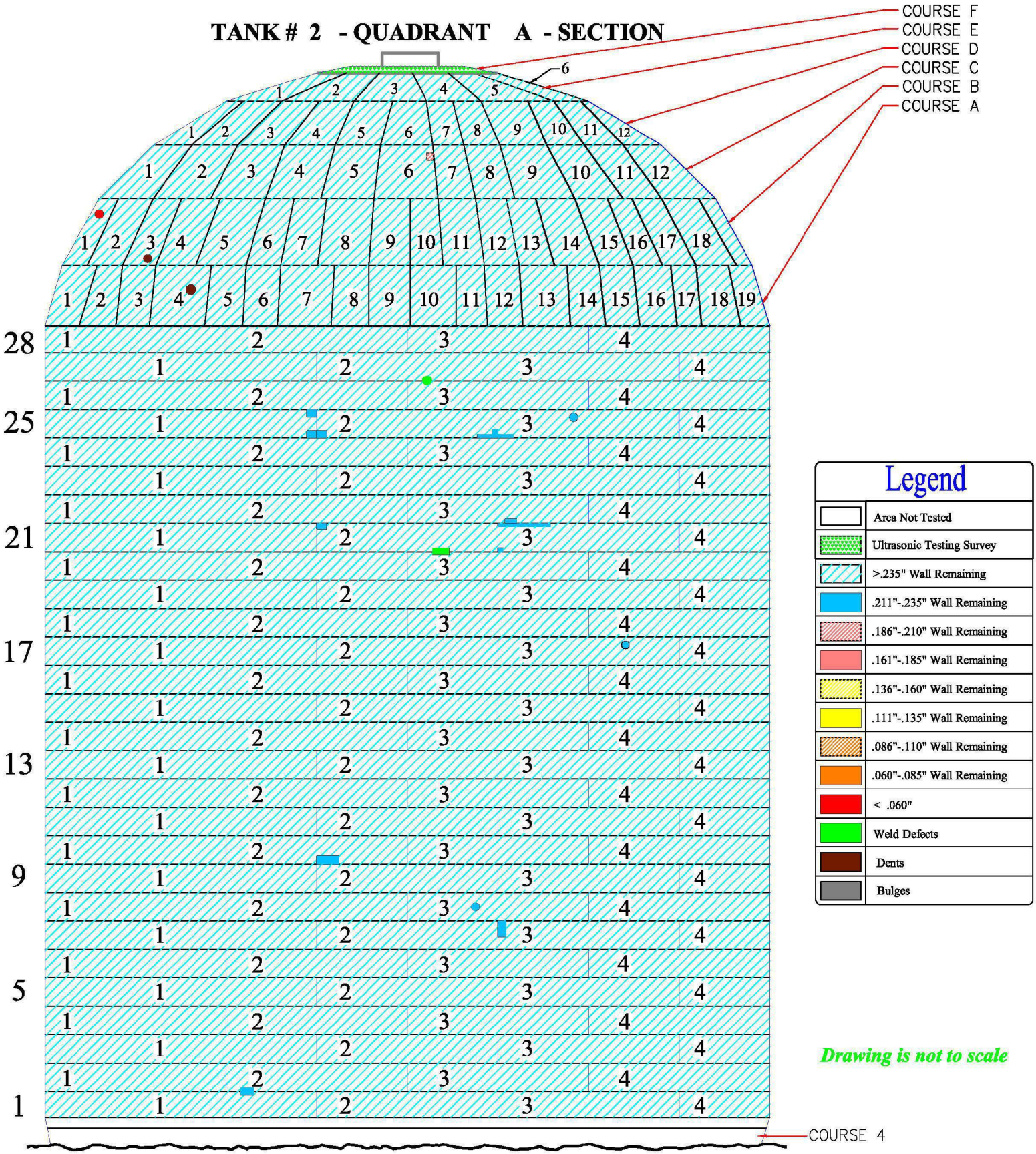

TANK # 2 - QUADRANT B - SECTION

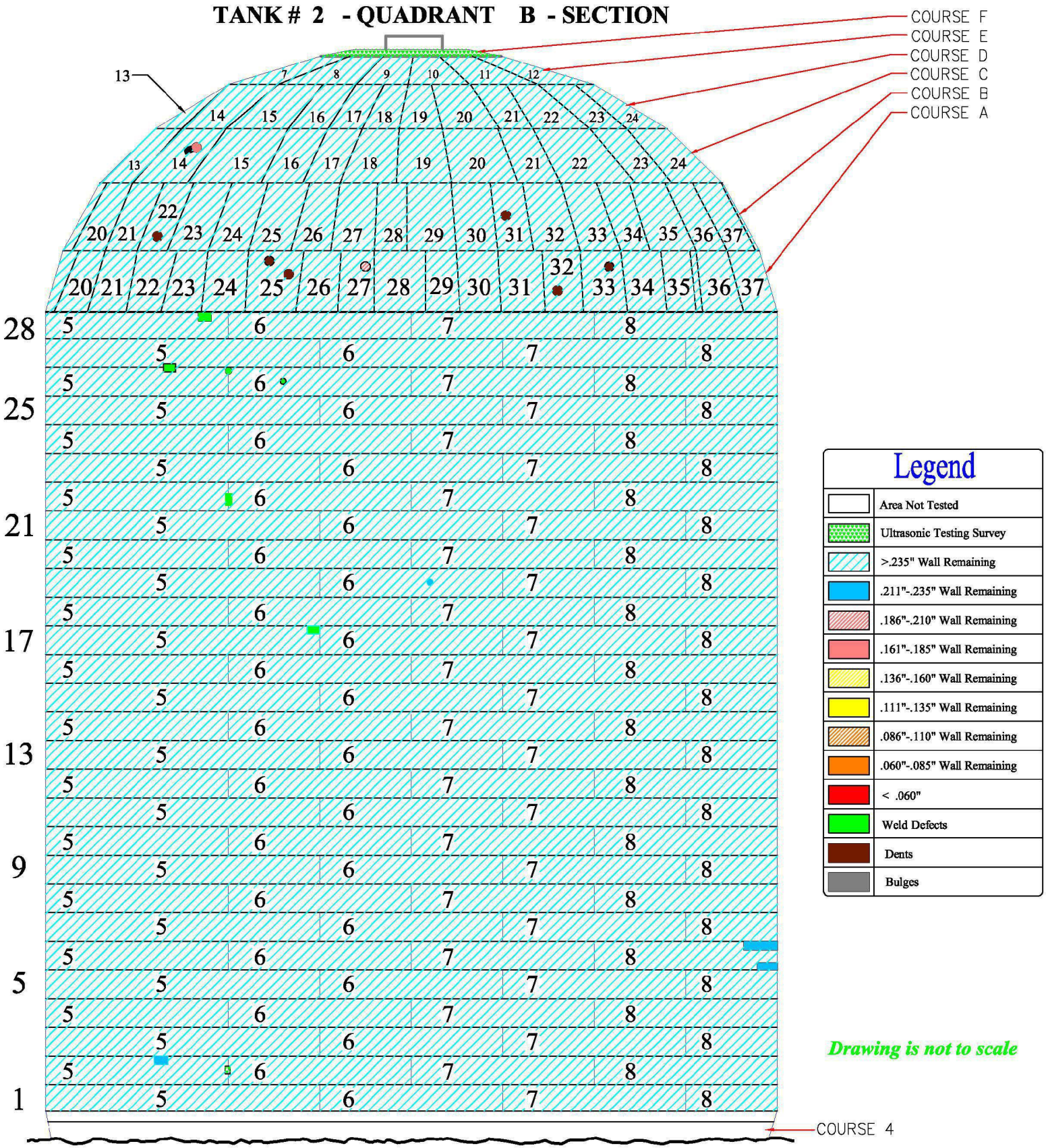

3.0
TANK MAPS
Dunkin & Bush, Inc.
Honolulu, HI

TANK # 2 - QUADRANT C - SECTION

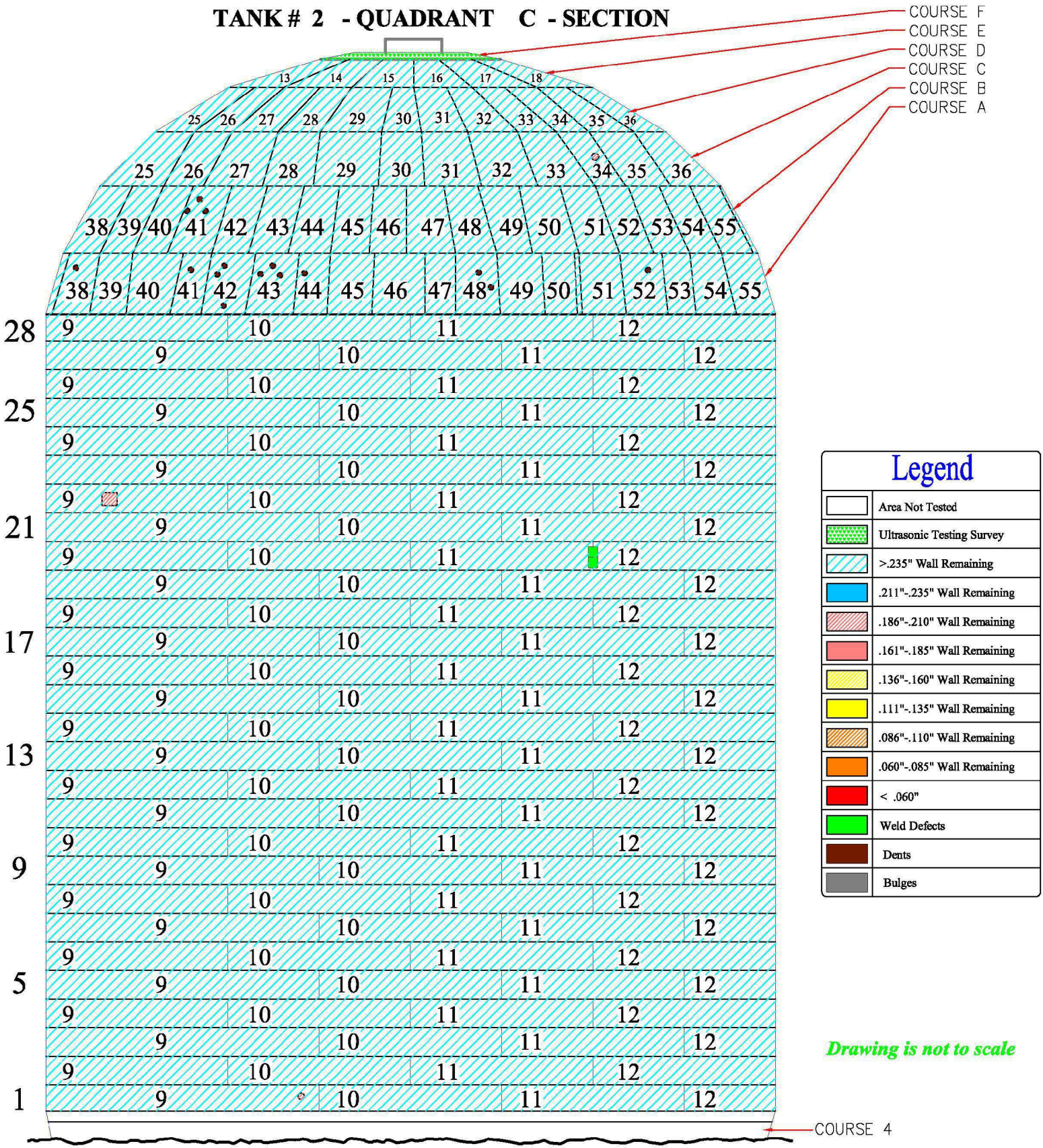

3.0TANK MAPS
Dunkin & Bush, Inc.
Honolulu, HI

TANK # 2 - QUADRANT D - SECTION

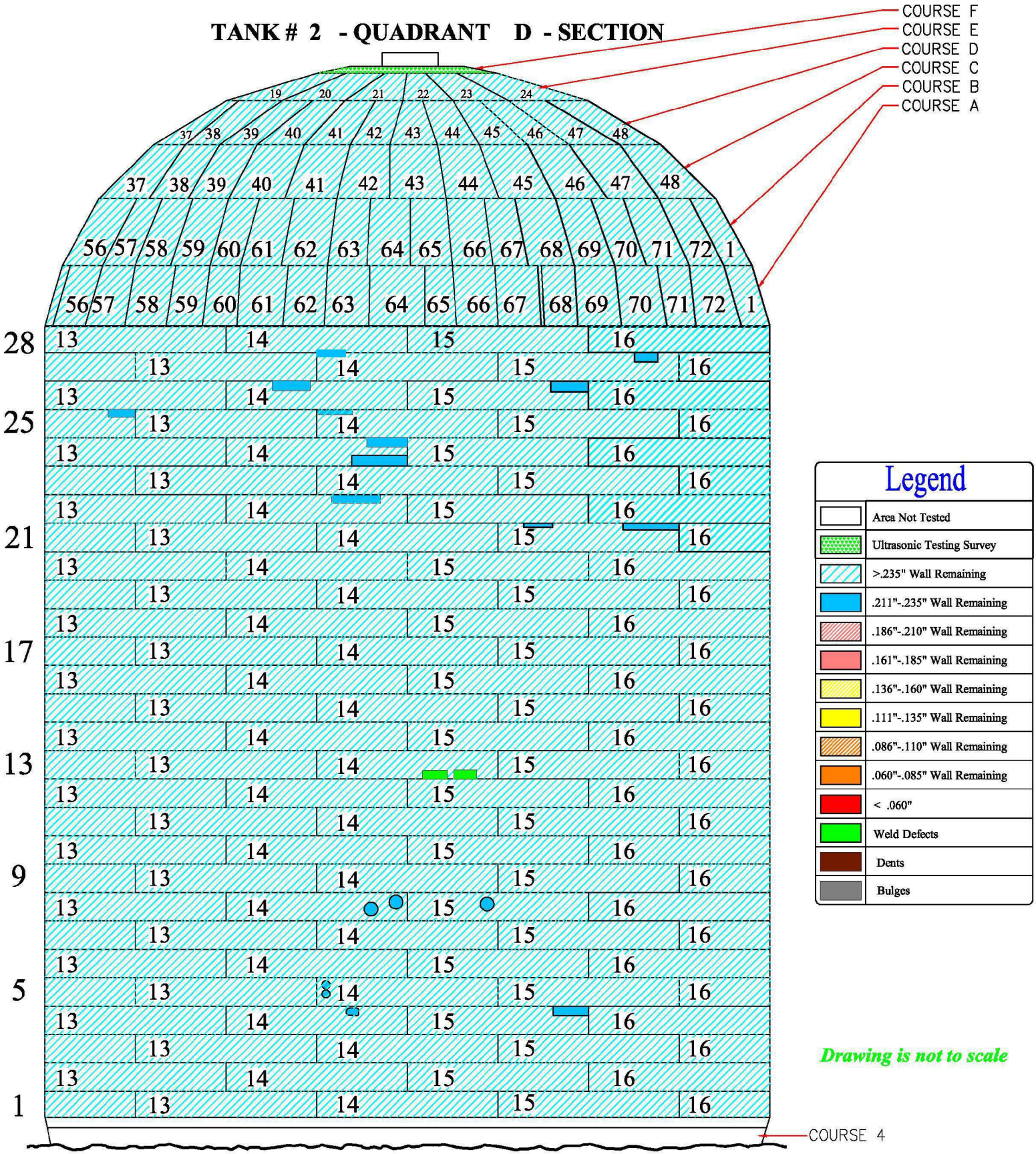

TANK # 2 - QUADRANT - A UPPER DOME (SECTIONS)

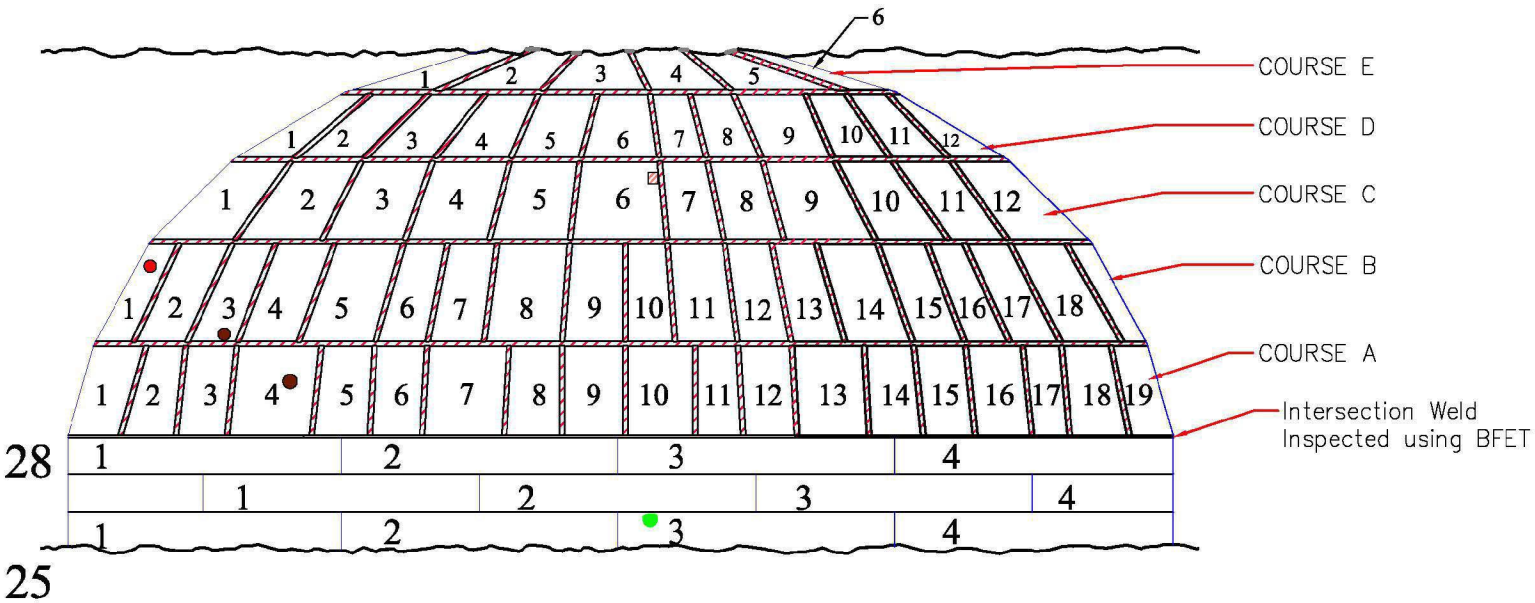

U.T. Range for All Channels tested: 0.135 - 0.150

TANK # 2 - QUADRANT - B UPPER DOME (SECTIONS)

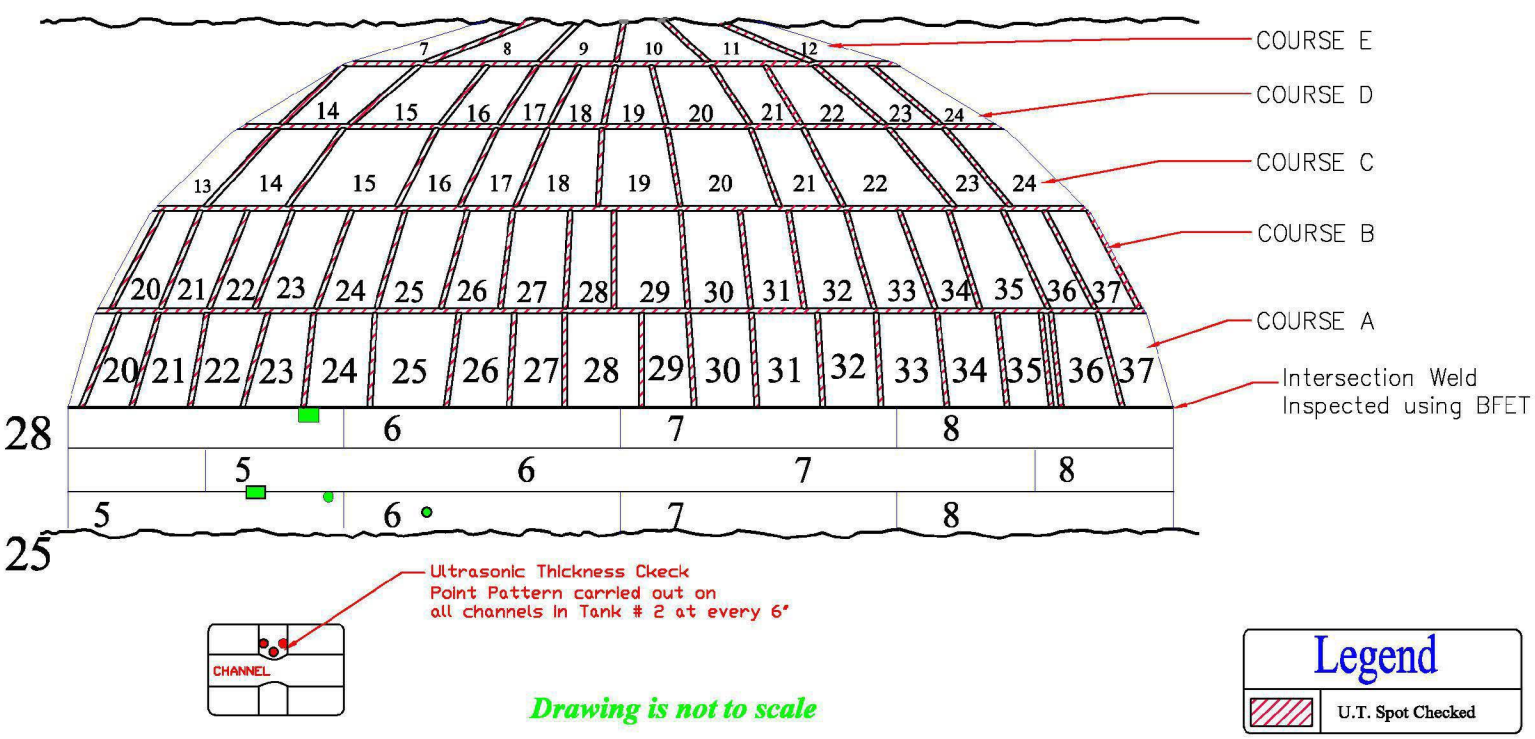

TANK # 2 - QUADRANT - C UPPER DOME (SECTIONS)

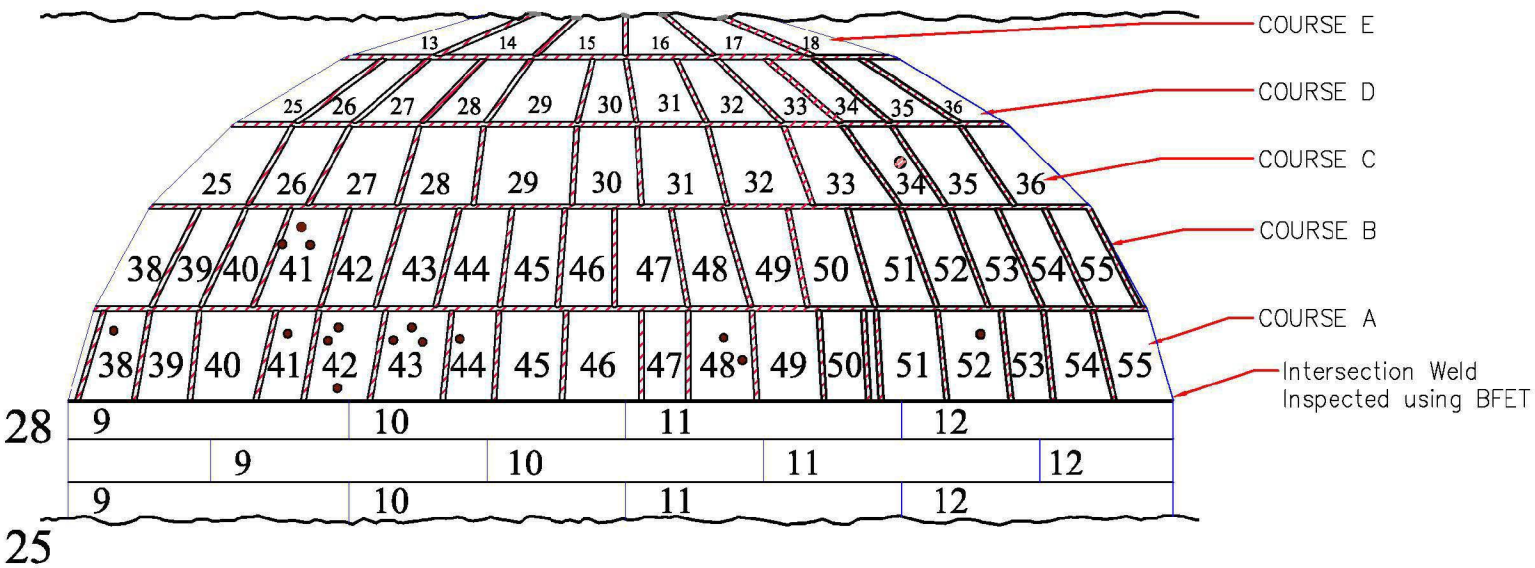

U.T. Range for All Channels tested: 0.135 - 0.150

TANK # 2 - QUADRANT - D UPPER DOME (SECTIONS)

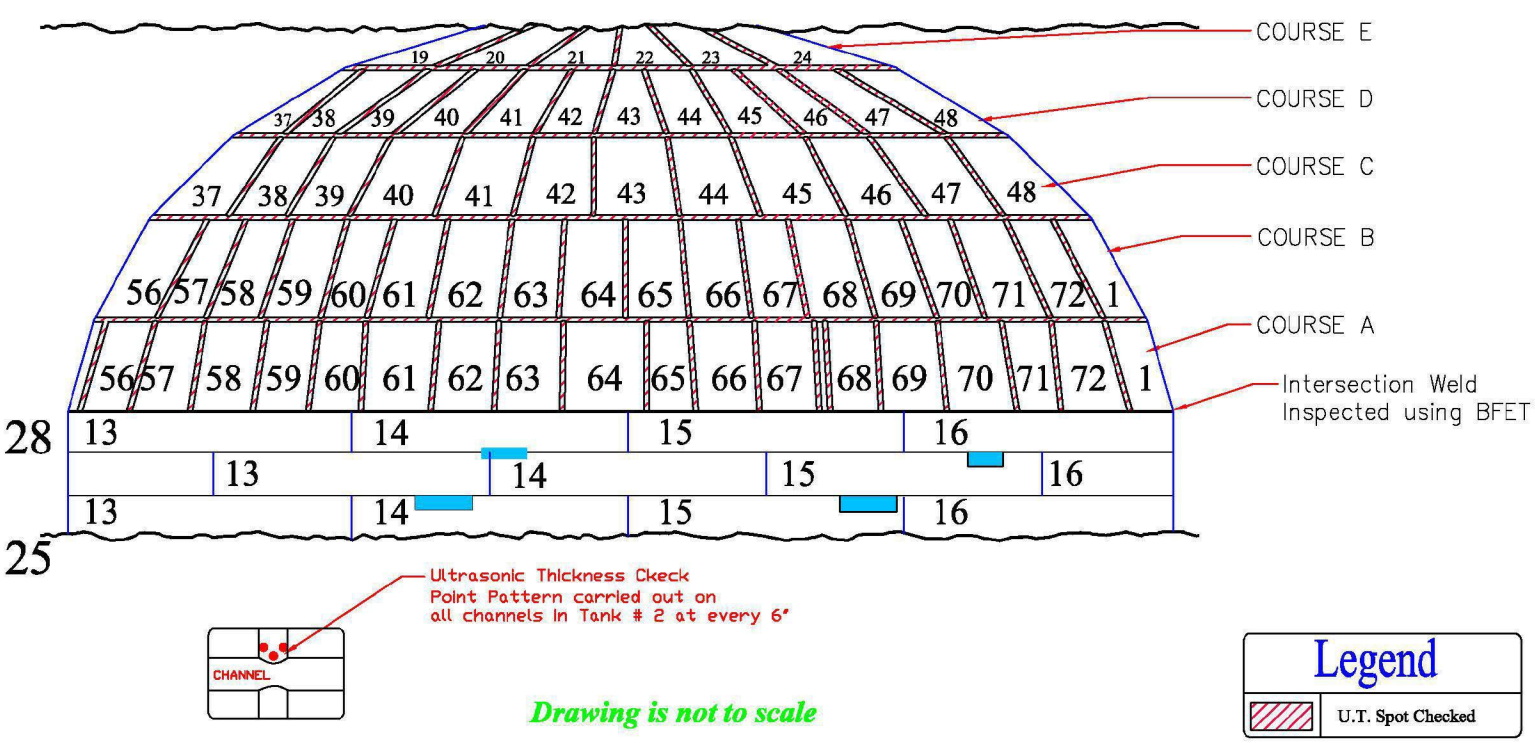

3.0 TANK MAPS
Dunkin and Bush, Inc.
Honolulu, HI
Tank #2 - Upper Dome Course F
Ultrasonic Testing Survey

Date Inspected/Confirmed: 5/6/2008

Tank Section: Upper Dome
Quadrant: A, B, C, D
Course: F

TANK #2 - Upper Dome Course F (U.T. Survey)
Nominal Plate Thickness: 0.250"

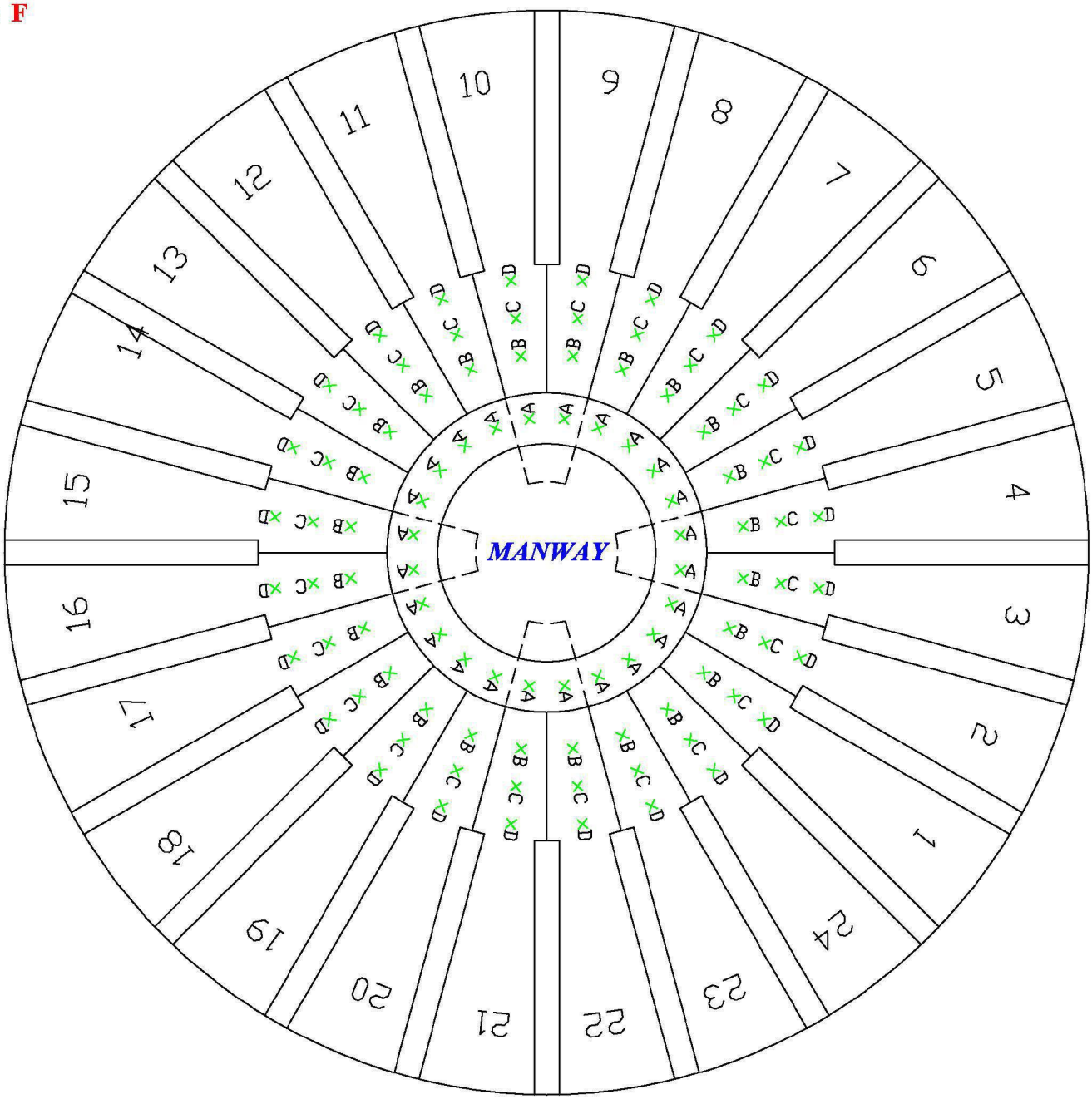

**Note: The U.T. Survey points on each plate in Course F of the Upper Dome were reachable from the gallery and are consequently close to the inside edge of each plate even though the pictorial representation above exaggerates the distance from the manway for illustration purposes.*

LEGEND
× ***Ultrasonic Testing Survey Point***

Drawing is not to scale

U.T. Thickness Measurements of Upper Dome Course F

Plate #	A	B	C	D
1	0.257"	0.273"	0.280"	0.280"
2	0.256"	0.259"	0.271"	0.259"
3	0.262"	0.244"	0.251"	0.246"
4	0.255"	0.257"	0.253"	0.261"
5	0.270"	0.277"	0.246"	0.253"
6	0.265"	0.259"	0.274"	0.275"
7	0.250"	0.293"	0.267"	0.270"
8	0.260"	0.262"	0.267"	0.277"
9	0.273"	0.252"	0.263"	0.268"
10	0.281"	0.258"	0.257"	0.262"
11	0.285"	0.268"	0.286"	0.280"
12	0.272"	0.282"	0.270"	0.278"
13	0.236"	0.263"	0.267"	0.269"
14	0.266"	0.263"	0.295"	0.274"
15	0.278"	0.288"	0.269"	0.270"
16	0.328"	0.287"	0.270"	0.288"
17	0.265"	0.284"	0.280"	0.286"
18	0.253"	0.269"	0.290"	0.288"
19	0.248"	0.271"	0.250"	0.261"
20	0.260"	0.270"	0.266"	0.266"
21	0.269"	0.261"	0.292"	0.266"
22	0.266"	0.277"	0.299"	0.277"
23	0.253"	0.262"	0.283"	0.273"
24	0.261"	0.249"	0.252"	0.282"

TANK MAPS
Dunkin and Bush, Inc.
Honolulu, HI
Tank #2 - 32" Fuel Pipe Nozzle
Ultrasonic Testing Survey

TANK #2 - 32" FUEL PIPE NOZZLE (U.T. Survey)

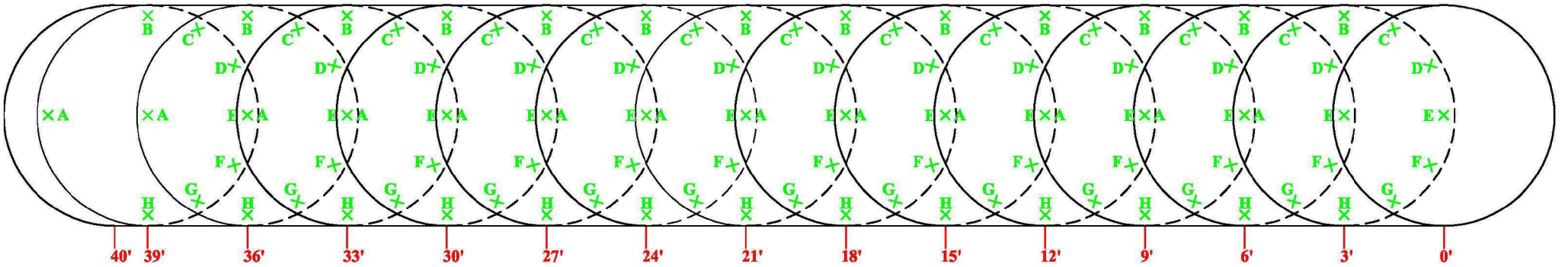

U.T. Thickness Measurements

	B	C	D	E	F	G	H	A
3'	0.385"	0.382"	0.390"	0.381"	0.380"	0.380"	0.383"	0.380"
6'	0.390"	0.388"	0.380"	0.387"	0.390"	0.390"	0.390"	0.400"
9'	0.399"	0.395"	0.380"	0.380"	0.390"	0.390"	0.390"	0.404"
12'	0.400"	0.420"	0.410"	0.379"	0.393"	0.410"	0.398"	0.408"
15'	0.403"	0.388"	0.399"	0.397"	0.390"	0.400"	0.393"	0.400"
18'	0.405"	0.400"	0.385"	0.399"	0.390"	0.385"	0.395"	0.405"
21'	0.394"	0.387"	0.385"	0.363"	0.368"	0.382"	0.393"	0.406"
24'	0.406"	0.420"	0.420"	0.400"	0.420"	0.400"	0.392"	0.373"
27'	0.400"	0.397"	0.409"	0.420"	0.400"	0.399"	0.396"	0.377"
30'	0.391"	0.391"	0.395"	0.420"	0.430"	0.389"	0.384"	0.370"
33'	0.374"	0.369"	0.370"	0.365"	0.369"	0.369"	0.366"	0.391"
36'	0.370"	0.395"	0.372"	0.373"	0.377"	0.385"	0.372"	0.400"
39'	0.390"	0.402"	0.400"	0.388"	0.406"	0.390"	0.400"	0.413"

Orientation

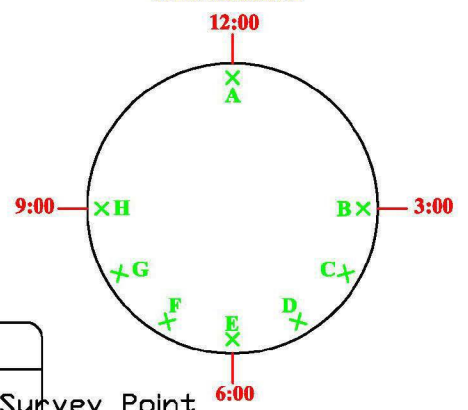

LEGEND

× Ultrasonic Testing Survey Point

Drawing is not to scale

3.0 TANK MAPS
Dunkin and Bush, Inc.
Honolulu, HI
Tank #2 - 18" Fuel Pipe Nozzle
Ultrasonic Testing Survey

TANK #2 - 18" FUEL PIPE NOZZLE (U.T. Survey)

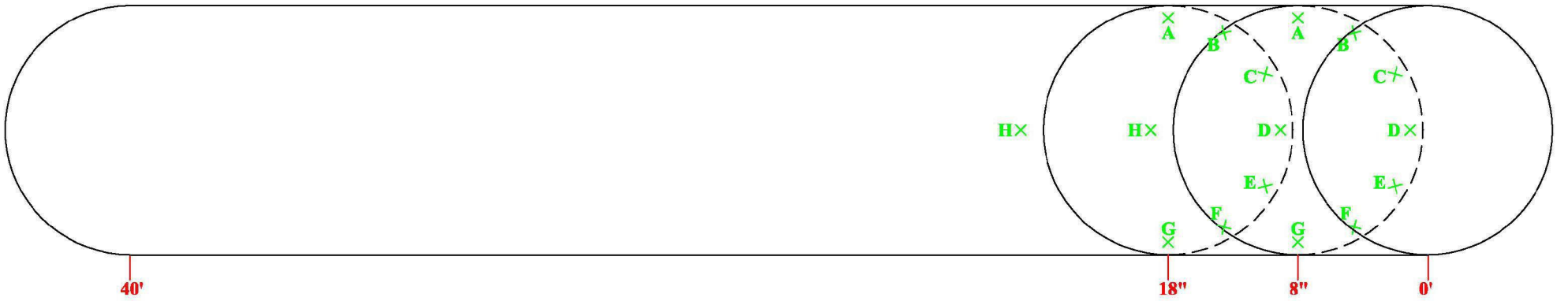

U.T. Thickness Measurements

	A	B	C	D	E	F	G	H
8"	0.380"	0.387"	0.390"	0.400"	0.386"	0.389"	0.380"	0.384"
18"	0.416"	0.402"	0.412"	0.380"	0.408"	0.390"	0.379"	0.388"

Orientation

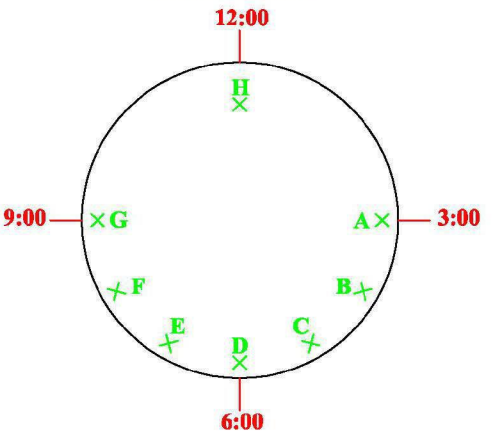

LEGEND	
×	*Iltrasonic Testing Survey Point*

Drawing is not to scale

RDHLCC0003095

4.0 PLATE TEST SUMMARY
Dunkin and Bush, Inc.
Honolulu, HI
Tank #2

Flaw No.	Tank Section	Quad	Row / Course	Plate / Vertical Drop	Description of Flaw / Defect	Remaining Thickness/ Depth
1	Lower Dome	A	1	2 & 3	Dent	NSWL
2	Lower Dome	B	1	7 & 8	WD-IMC	0.229
3	Lower Dome	C	1	15 & 16	WD-IMC, IMC	.223, .214
4	Lower Dome	D	1	20 & 21	WD-IP, AS	.222, .069
5	Lower Dome	D	2	47	WL, WD	0.147-.210, .215
6	Lower Dome	C	2	39	Dent	NSWL
7	Lower Dome	A	3	13 & 14	WD-LOF	0.195
8	Lower Dome	A	3	14 & 15	WL	0.233
9	Lower Dome	C	3	41	WL	0.230
10	Lower Dome	C	3	45	WL/PIT	0.219
11	Lower Dome	A	3	5	WL	0.226
12	Lower Dome	A	3	8	WL	0.233
13	Barrel	A	25	2	WL	0.231
14	Barrel	A	2	2	WD-LOF	0.125
15	Barrel	A	21	2	WL	0.233
16	Barrel	A	25	1	WL	0.232, 0.227
17	Barrel	A	21	3	WD-LOF, WL, WL	.173, 0.224, 0.234
18	Barrel	A	7	3	WL	0.228
19	Barrel	D	24	14	WL, WL	0.227, 0.232
20	Barrel	D	22	14	WL	0.234
21	Barrel	D	4	15	WL	0.235
22	Barrel	D	8	14	WL, WL	.230, .221
23	Barrel	D	8	15	WL	0.228
24	Barrel	A	26	3	WD-Porosity	0.210
25	Barrel	A	17	3	WD-AS	0.063
26	Barrel	A	20	3	WD-Porosity	0.181
27	Barrel	A	25	3	Pitting	0.234
28	Barrel	A	8	3	Pitting	0.220
29	Barrel	D	13	14	WD-LOF,LOF,LOF,LOF	.173, .112, .205, .206
30	Barrel	D	4	14	Pitting	0.226
31	Barrel	D	5	14	Pitting, Pitting	0.235, .235
32	Barrel	D	21	15	WL, WL	.230, 0.219
33	Barrel	D	20	14	WD-Tack weld	0.082
34	Barrel	A	25	2	WL	0.219
35	Barrel	A	25	3	WL	0.221
36	Barrel	A	10	2	WL	0.218
39	Barrel	D	25	14	WL	0.230
40	Barrel	D	26	14	WL	0.214
42	Barrel	D	25	14	WL	0.223/0.234
43	Barrel	D	27	14	WL	0.229
44	Barrel	A	27	5	WL/Bulge	0.230
45	Barrel	A	2	5	WL	0.225
46	Barrel	D	25	12	WL	0.230
47	Barrel	D	20	12	WD-LOF, PH, LOF,LOF	.211, .088, .219, .221

4.0 PLATE TEST SUMMARY
Dunkin and Bush, Inc.
Honolulu, HI
Tank #2

Flaw No.	Tank Section	Quad	Row / Course	Plate / Vertical Drop	Description of Flaw / Defect	Remaining Thickness/ Depth
48	Barrel	B	17	5	WL	0.232
49	Barrel	B	26	5	WD-SL, LOF	.114, .083
50	Barrel	B	28	5	WD-LOF	0.104
51	Barrel	B	26	6	Pitting	0.220
52	Barrel	B	22	6	WD-LOF, LOF	.169, .154
53	Barrel	B	19	6	Pitting	0.220
54	Barrel	B	2	6	WD-LOF	0.219
55	Barrel	C	23	11	WL	0.228
56	Barrel	C	6	8	WL	0.225
57	Barrel	C	6	8	WL	0.229/0.231
58	Barrel	C	1	9	WL on PP	0.200
59	Barrel	C	22	9	WL	0.186
60	Upper Dome	C	A	41	Dent	NSWL
61	Upper Dome	C	A	43	Dent, Dent, Dent	NSWL
62	Upper Dome	C	A	38	Dent	NSWL
63	Upper Dome	C	A	42	Dent, Dent, Dent	NSWL
64	Upper Dome	C	A	44	Dent	NSWL
65	Upper Dome	C	A	52	Dent	NSWL
66	Upper Dome	C	B	41	Bulge, Dent, Dent	NSWL
67	Upper Dome	B	C	14	WL-PP, WL	0.141, 0.185
68	Upper Dome	B	B	31	Dent	NSWL
69	Upper Dome	B	A	25	Dent	NSWL
70	Upper Dome	B	A	25	Dent	NSWL
71	Upper Dome	B	A	33	Dent	NSWL
72	Upper Dome	B	A	27	Pitting	0.210
73	Upper Dome	B	A	32	Dent	NSWL
74	Upper Dome	B	B	22	Dent	NSWL
75	Upper Dome	A	B	3	Dent	NSWL
76	Upper Dome	A	B	1	Pitting	THRU/.018
77	Upper Dome	A	A	4	Dent	NSWL
79	Upper Dome	A	C	6	WL	0.210
80	Upper Dome	A	A	48	Dent, Dent	NSWL
81	Upper Dome	C	C	34	TS Pitting	0.055
82	Floor	A		2	TS pitting	0.435
83	Floor	B		4	TS pitting	0.336
84	Lower Dome	DA	1	21 & 1	Junction Pitting Shell	0.181
85	Lower Dome	A	1	1 & 2	JPS	0.180
86	Lower Dome	A	1	2 & 3	JPS	0.189
87	Lower Dome	A	1	3 & 4	JPS	0.179
88	Lower Dome	A	1	4 & 5	JPS	0.216
98	Lower Dome	A	1	5 & 6	JPS	0.212
90	Lower Dome	AB	1	6 & 7	JPS	0.206
91	Lower Dome	B	1	7 & 8	JPS	0.212
92	Lower Dome	B	1	8 & 9	JPS	0.209

4.0 PLATE TEST SUMMARY
Dunkin and Bush, Inc.
Honolulu, HI
Tank #2

Flaw No.	Tank Section	Quad	Row / Course	Plate / Vertical Drop	Description of Flaw / Defect	Remaining Thickness/ Depth
93	Lower Dome	B	1	9 & 10	JPS	0.218
94	Lower Dome	B	1	10 & 11	JPS	0.211
95	Lower Dome	BC	1	11 & 12	JPS	0.222
96	Lower Dome	C	1	12 & 13	JPS	0.226
97	Lower Dome	C	1	13 & 14	JPS	0.223
98	Lower Dome	C	1	14 & 15	JPS	0.198
99	Lower Dome	C	1	15 & 16	JPS	0.188
100	Lower Dome	CD	1	16 & 17	JPS	0.190
101	Lower Dome	D	1	17 & 18	JPS	0.193
102	Lower Dome	D	1	18 & 19	JPS	0.185
103	Lower Dome	D	1	19 & 20	JPS	0.186
104	Lower Dome	D	1	20 & 21	JPS	0.180
105	Lower Dome	DA	1	21 & 1	WD-LOF	.094, .081, .100
106	Lower Dome	A	1	1 & 2	WD-LOF	.086, .084
107	Lower Dome	A	1	2 & 3	WD-LOF, Crack	.201, .217
108	Lower Dome	A	1	3 & 4	WD-LOF, Crack, LOF, LOF	.206, .200, .080, .135
109	Lower Dome	A	1	4 & 5	WD-LOF, LOF, LOF, LOF, LOF	.201, .212, .201, .086, .162
110	Lower Dome	A	1	5 & 6	WD-LOF, LOF, LOF, LOF	.193, .198, .065, 148
111	Lower Dome	AB	1	6 & 7	WD-LOF, LOF, LOF, LOF	.185, .157, .197, .195
112	Lower Dome	B	1	7 & 8	WD-IMC, IMC, IMC, IMC, IMC	.145, .222, .188, .182, .218
113	Lower Dome	B	1	8 & 9	WD-LOF, LOF, LOF	.079, .207, .086
114	Lower Dome	B	1	9 & 10	WD-LOF, LOF	.133, .216
115	Lower Dome	B	1	10 & 11	WD-LOF, LOF	.082, .080
116	Lower Dome	BC	1	11 & 12	WD-LOF, LOF	.216, .071
117	Lower Dome	C	1	15 & 16	WD-LOF, LOF	.102, .197
118	Lower Dome	CD	1	16 & 17	WD-LOF, LOF	.080, .085
119	Lower Dome	D	1	17 & 18	WD-LOF	0.211
120	Lower Dome	D	1	18 & 19	WD-LOF, IP	.088, .288
121	Lower Dome	D	1	19 & 20	WD-IMC, IMC	.238, .231
122	Lower Dome	D	1	20 & 21	WD-LOF	0.192
123	Lower Dome	A	2	1	Bulge	NSWL
124	Lower Dome	D	2	62	Bulge	NSWL
125	Lower Dome	A	1	1 & 2	Bulge (both plates entirely)	NSWL

* Note: Flaws in "Red" are shown in depth, not remaining. All others in "Black" are in remaining. Abbreviations are as follows; WD (weld defect), LOF (lack of fusion), IMC (intermittent cracking), IP (incomplete Penetration), AS (arc strike), PH (pin hole), SL (slag line), PP (patch plate), WL (wall loss), TS (topside), NSWL (no significant wall loss), JPS (junction pitting on shell).

5.0 TYPICAL WAVEFORMS

Dunkin and Bush, Inc.
Honolulu, HI
Tank #15

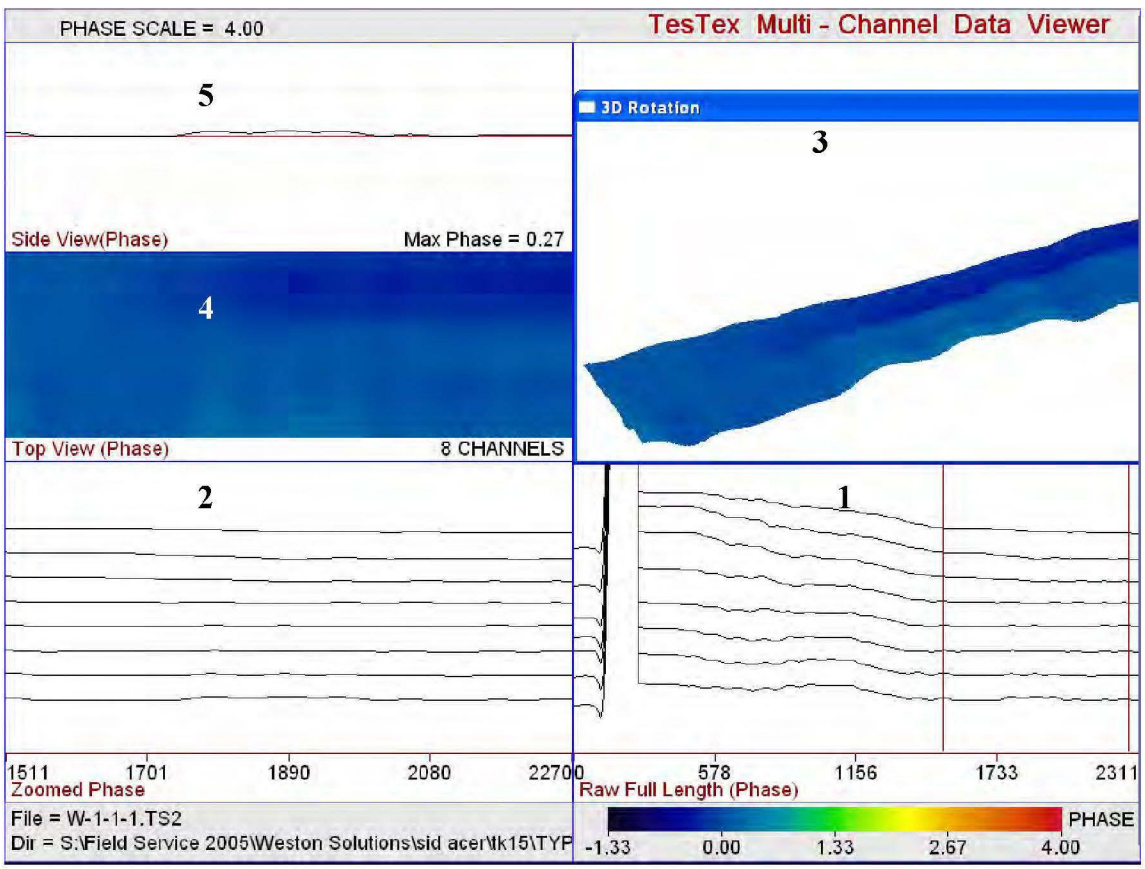

Shown above is a typical **TS-2000** waveform collected from the Barrel of Tank #15. This particular plate exhibits nominal wall thickness.

The **TS-2000** display has 5 windows to facilitate the interpretation of each plate. Window 1 shows raw data from the scanner before the signal is processed or filtered. The 2nd window shows the raw data filtered and processed. The 3rd window shows a 3-D view of the plate. The 4th window shows a topside view of the plate. The 5th window shows the highest and lowest points of the plate baseline.

The **TS-2000** scanner is comprised of 8 sensors, which gives more sensitivity to pitting and cracking. Each sensor is individually represented by a line in windows 1, 2, and 3. The 4th window shows each sensor and is color marked as it detects wall loss. Any rise in the waveform indicates wall loss. The magnitude of the response is given by a color and is coded to the right of the waveform. From this color and comparing it to a calibration, a percent wall loss or wall remaining value can therefore be determined.

APPENDIX A – SAMPLE WAVEFORMS

APPENDIX A – SAMPLE WAVEFORMS

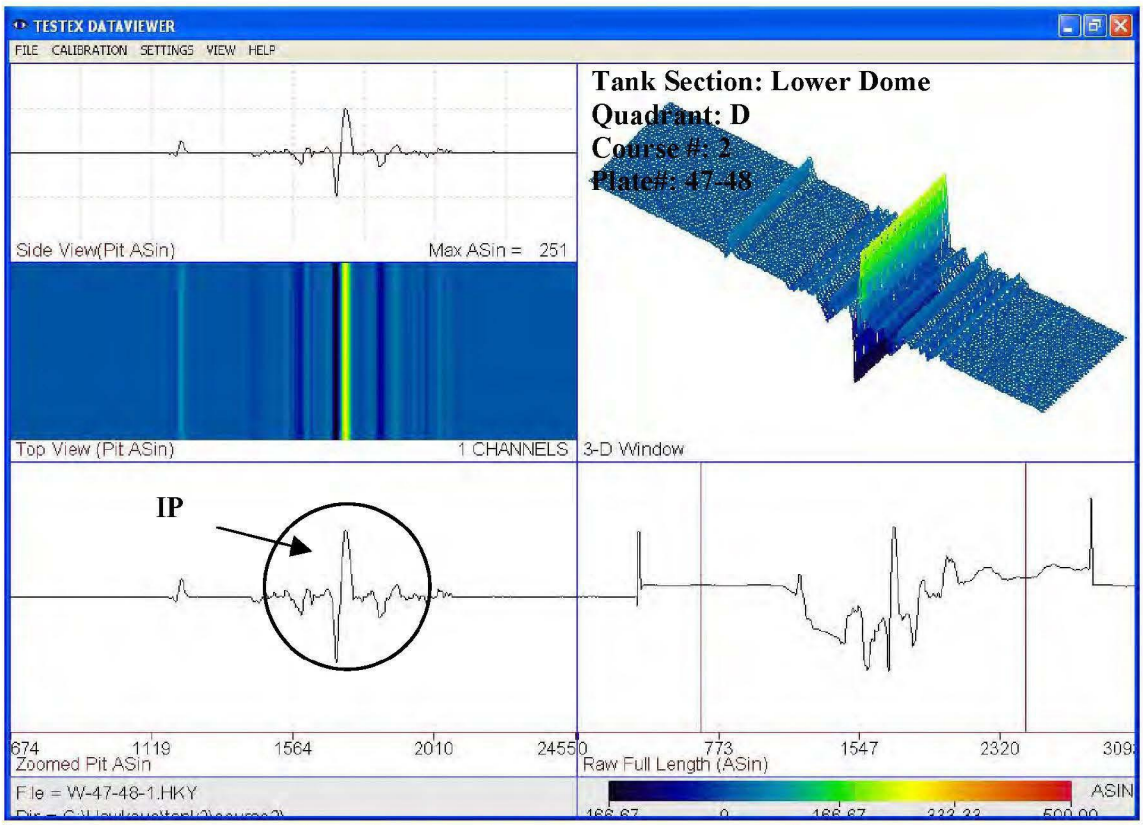

Flaw # 5B: The waveform above depicts incomplete penetration on the vertical weld, 1" long, at a depth of .215".

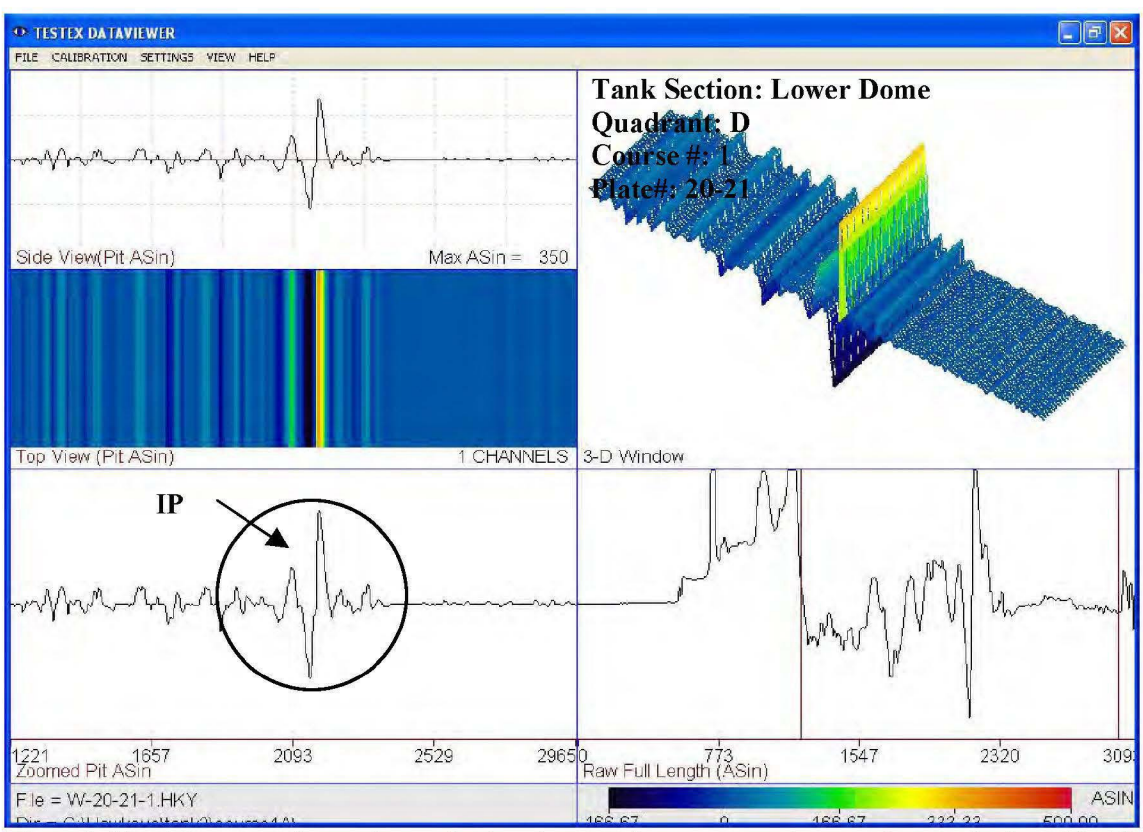

Flaw # 4A: The waveform above depicts incomplete penetration on the vertical weld, 1" long, at a depth of .222".

APPENDIX A – SAMPLE WAVEFORMS

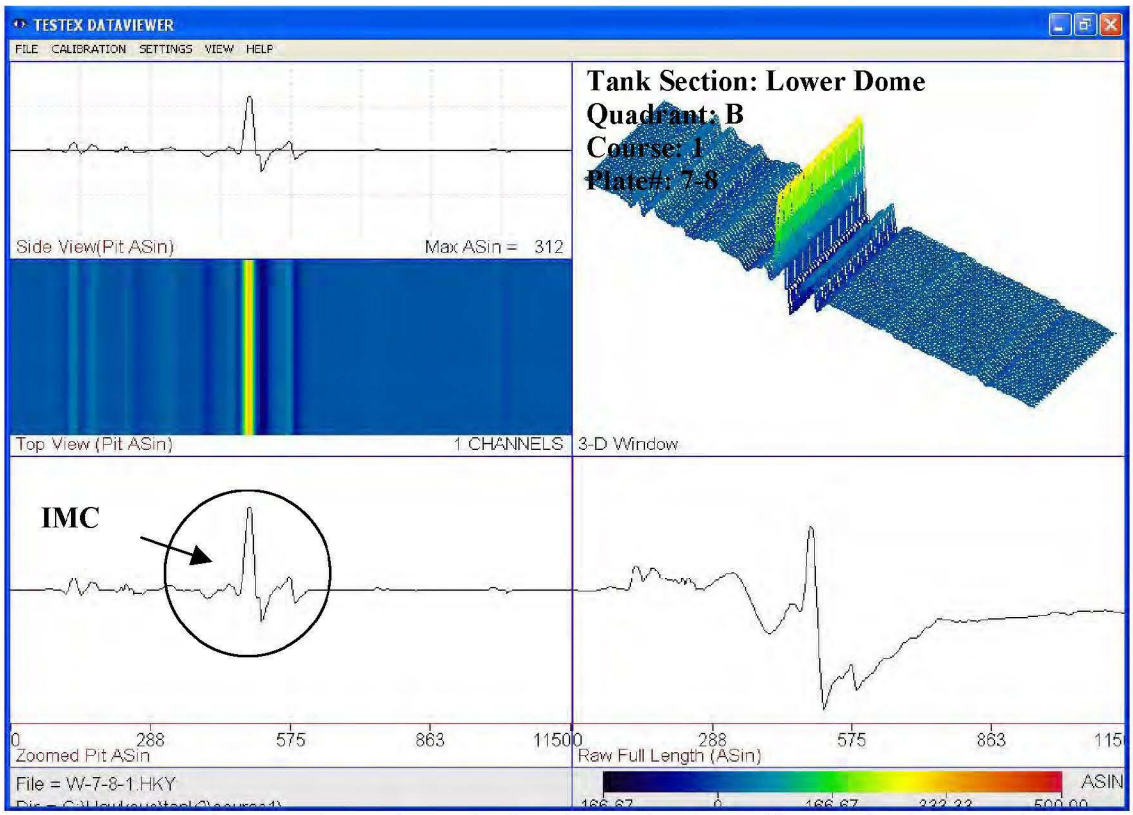

Flaw # 2A,B: The waveform above depicts intermitted cracking on both sides of the vertical weld, 10" long, at depths of .229" and .154".

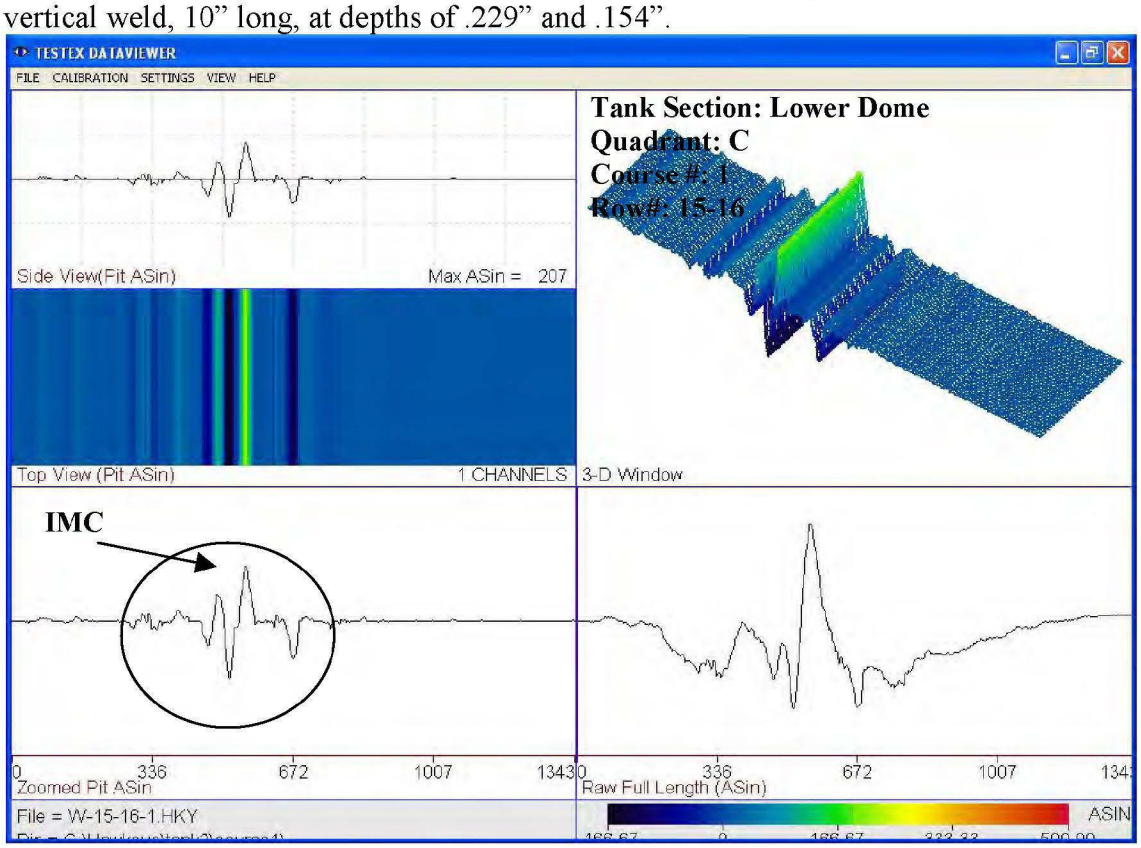

Flaw # 3A,B: The waveform above depicts intermitted cracking on both sides of the vertical weld, 10" long, at depths of .223" and .214".

APPENDIX A – SAMPLE WAVEFORMS

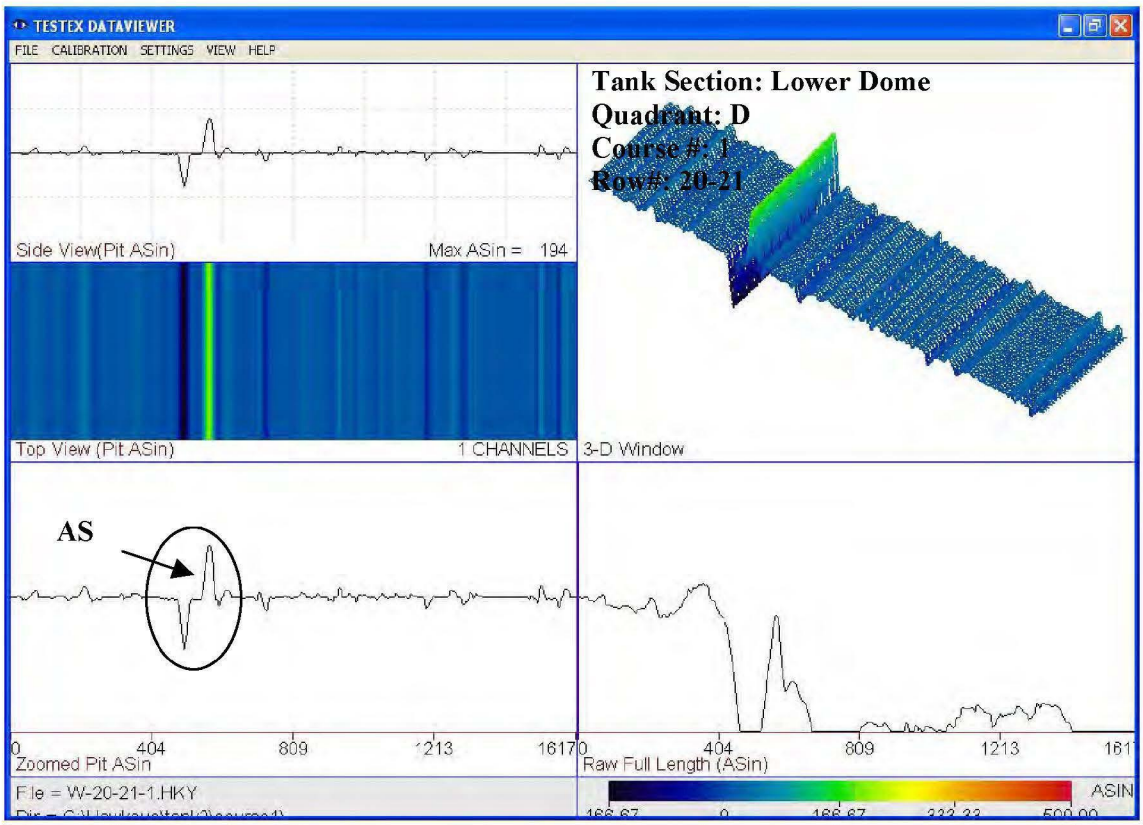

Flaw # 4B: The waveform above depicts arc strike at the toe on the vertical weld, 2" long, at a depth of .069".

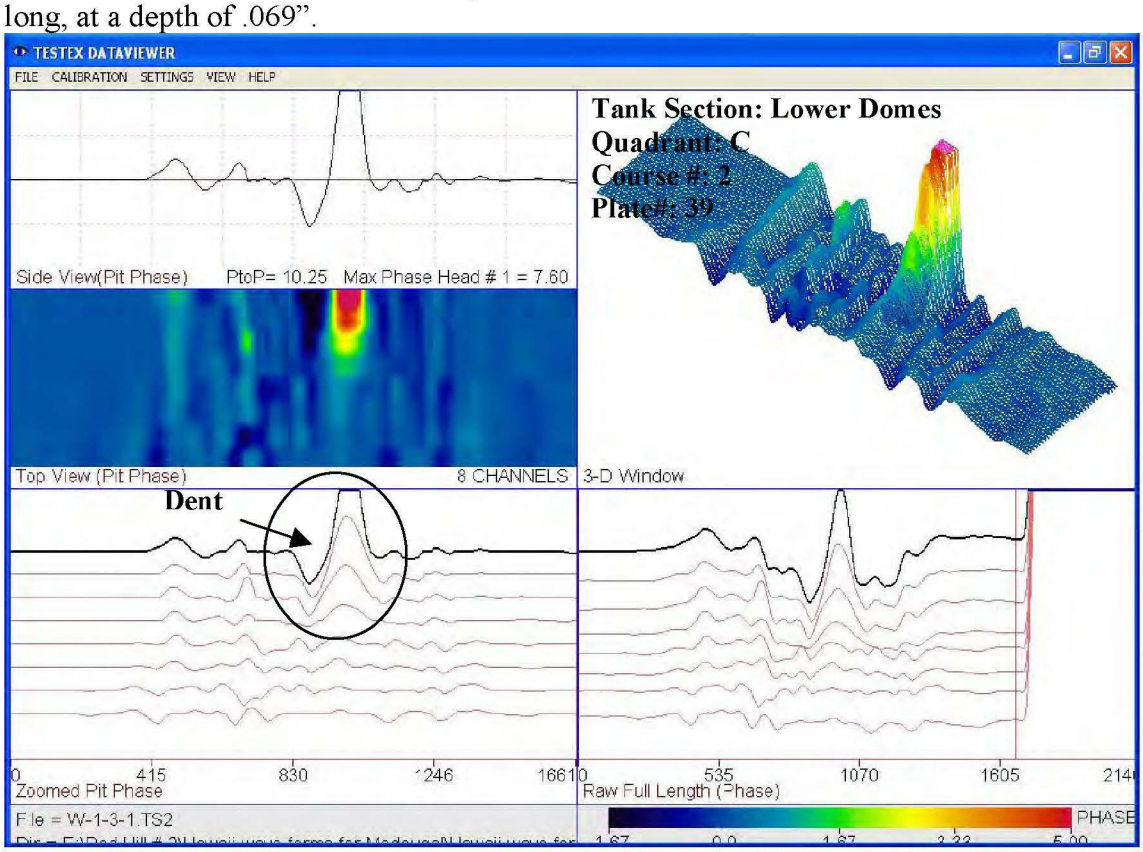

Flaw # 6: The waveform above depicts a dent with no significant wall loss (NSWL).

APPENDIX A – SAMPLE WAVEFORMS

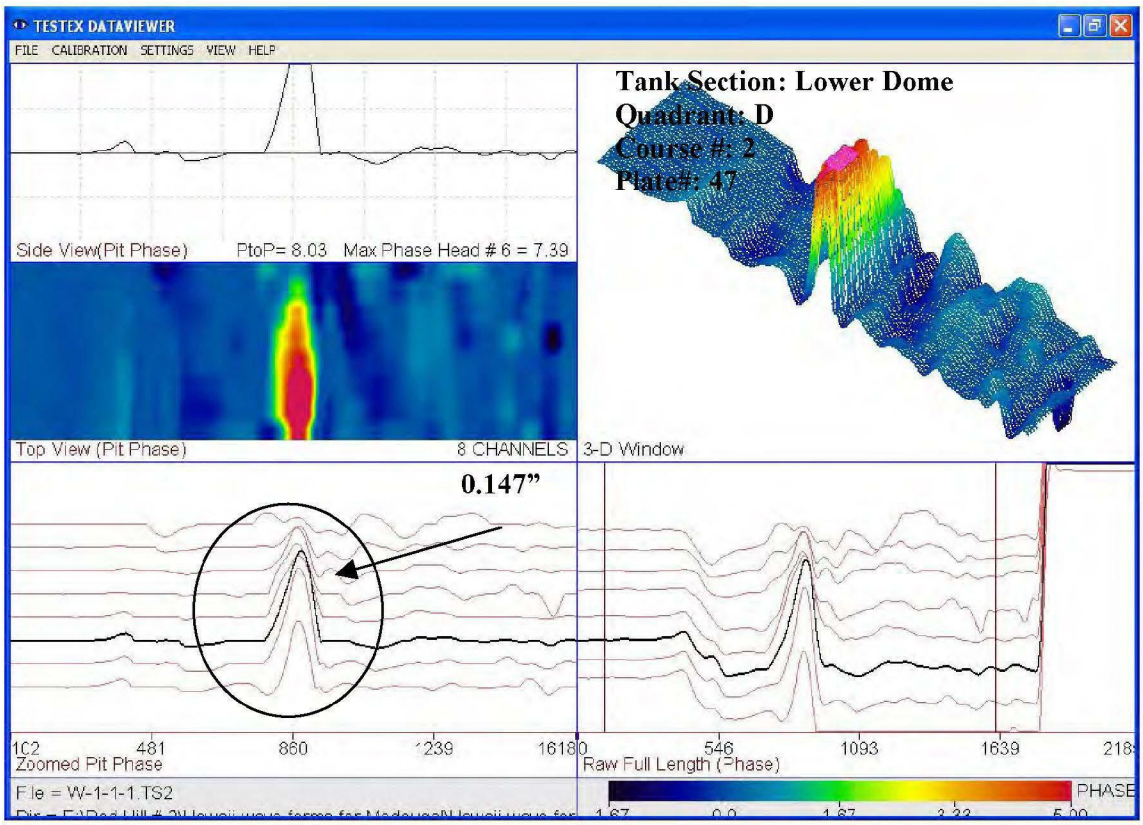

Flaw # 5A: The waveform above depicts underside corrosion exhibiting 0.147" wall remaining.

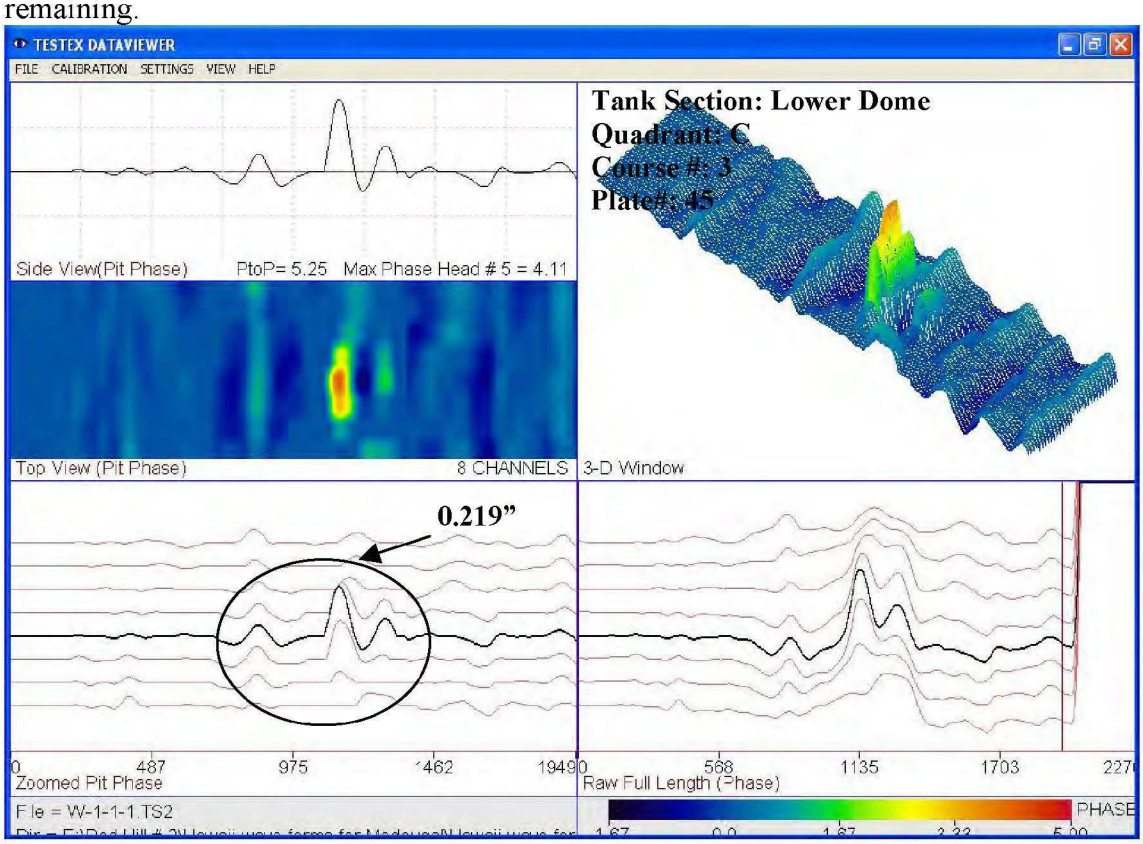

Flaw # 10: The waveform above depicts underside corrosion exhibiting 0.219" wall remaining.

APPENDIX A – SAMPLE WAVEFORMS

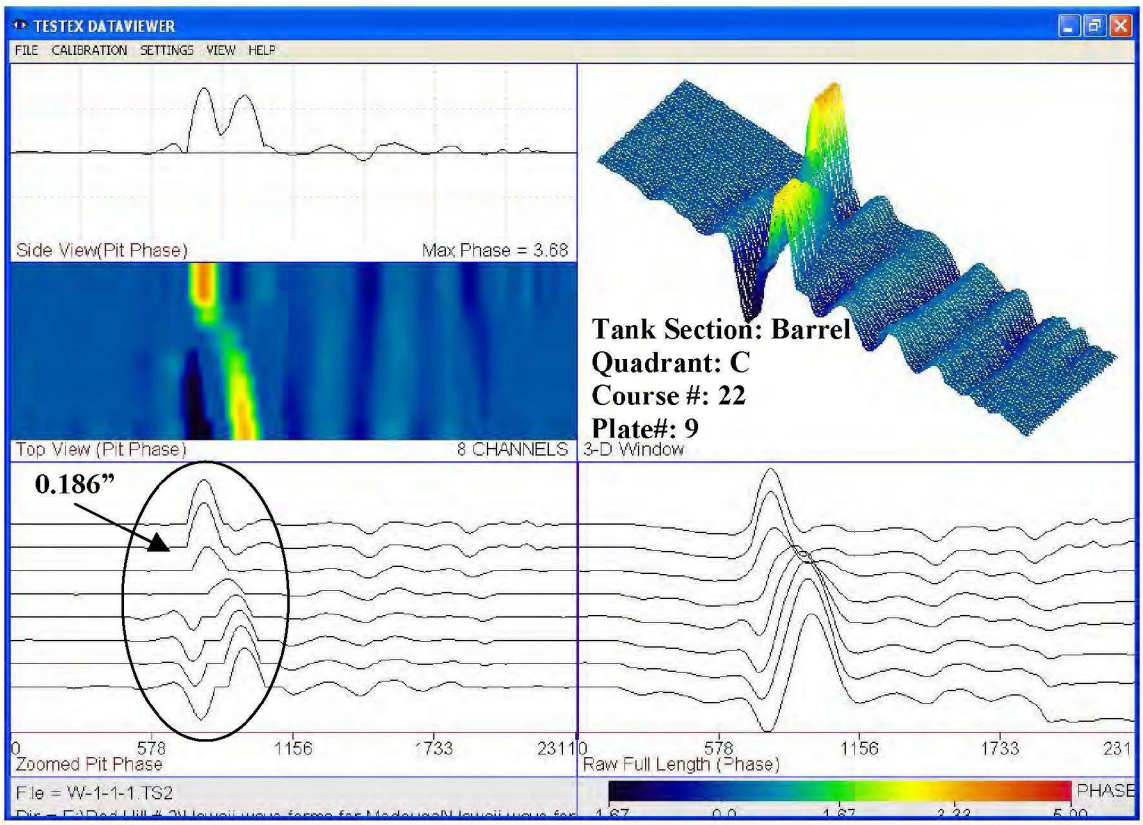

Flaw # 59: The waveform above depicts underside corrosion exhibiting 0.186" wall remaining.

APPENDIX B – CALIBRATION