United States
Environmental Protection
Agency

EPA 305-X-04-001
July 2004

NPDES Compliance Inspection Manual

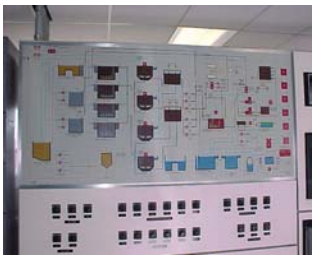

Office of Enforcement
and Compliance Assurance
(2223A)

EPA 305-X-04-001
July 2004

NPDES Compliance Inspection Manual

July 2004

(Appendix J - updated April 2006)
(Appendix H - updated August 2006)

U.S. Environmental Protection Agency
Office of Compliance
Office of Enforcement and Compliance Assurance
1200 Pennsylvania Avenue, N.W.

This page intentionally left blank.

FOREWORD

The National Pollutant Discharge Elimination System (NPDES) Compliance Inspection Manual has been developed to support personnel that conduct NPDES inspections of wastewater treatment plants, storm water industrial and construction sites, pretreatment facilities, biosolids handling and treatment facilities, Concentrated Animal Feeding Operations (CAFOs), municipal wastewater collection systems (combined and separate from storm water) as well as pollution prevention and multimedia concerns. These procedures are fundamental to the NPDES compliance program and provide inspectors with a method for conducting inspections.

The manual presents standard procedures for inspections. In addition to the manual EPA expects its inspectors to have completed training to develop a good working knowledge of the subject related problems, regulations, control technologies, and Best Management Practices. EPA Order 3500.1, Training and Development for Compliance Inspectors/Field Investigators, establishes the Basic Health and Safety and Program-Specific Curricula for EPA compliance inspectors before they lead or conduct inspections independently. The manual will serve as a reference for the experienced inspector.

Regional and State personnel are encouraged to provide U.S. Environmental Protection Agency (EPA) Headquarters with changes or information that would improve the manual. Comments, information, and suggestions should be addressed to:

Clean Water Team
Compliance Assessment and Media Programs Division (2223A)
Office of Enforcement and Compliance Assurance
U.S. Environmental Protection Agency
1200 Pennsylvania Avenue, NW
Washington, DC 20460

The information contained in this manual is comprehensive and designed to address a wide range of activities. Since each inspection may not involve all activities, the inspector should refer to those parts applicable to the particular inspection.

The manual is organized into two parts. The first part, covering basic inspection components, consists of seven chapters. The second part includes specific information on different types of inspections.

Basic Inspection Components

- Chapter One, "Introduction," describes the NPDES program and provides general information relating to legal authority and inspector responsibilities.

- Chapter Two, "Inspection Procedures," discusses general procedures common to all NPDES inspections, including pre-inspection preparation, entry, opening conference, documentation, closing conference, and the inspection report.

- Chapters Three through Seven provide the specific technical information necessary to conduct the full range of NPDES compliance inspection activities. Each chapter describes procedures for the major technical activities involved in compliance inspections:

    - Chapter Three, Documentation/Recordkeeping and Reporting
    - Chapter Four, Facility Site Review
    - Chapter Five, Sampling
    - Chapter Six, Flow Measurement
    - Chapter Seven, Laboratory Procedures and Quality Assurance

Specific Information

- Chapter Eight, Toxicity
- Chapter Nine, Pretreatment
- Chapter Ten, Sewage Sludge
- Chapter Eleven, Storm Water
- Chapter Twelve, Combined Sewer Overflows
- Chapter Thirteen, Sanitary Sewer Overflows
- Chapter Fourteen, Pollution Prevention
- Chapter Fifteen, Multi Media Concerns
- Chapter Sixteen, Concentrated Animal Feeding Operations

Within each chapter, tables illustrate the topics discussed in the text. These are located at the end of the chapter subsection in which they are referenced. Additional information and figures are also included in the appendices to the manual. As appropriate, references and checklists are provided at the end of the chapter. The checklists presented in this manual are intended as guidance. They can be used as presented or modified to address the needs of the inspection authority. (More detailed checklists/guidance for any individual inspection type may have also been developed by EPA or State agencies and are presented in the guidance materials specific to that type of inspection.)

It should be noted that the text is written from the perspective of the Federal Clean Water Act requirements. State NPDES inspectors using this manual may find that State rules and procedures on such topics as notice to the permittees vary to some degree from the material found in this manual.

This page intentionally left blank.

ACKNOWLEDGMENTS

We would like to thank the considerable efforts and cooperation of the persons who reviewed this document and provided comments.

This manual was revised under the direction of Peter Bahor, who chaired the workgroup. Extensive reviews were conducted by EPA Headquarters and Regional Offices. These reviews provided valuable comments. A special thanks to the following work group participants for their assistance in updating this manual:

Headquarters - Office of Compliance
Walter Brodtman, Environmental Engineer, Compliance Assistance and Sector Programs Division (CASPD),
Sharie Centilla, Environmental Protection Specialist, CASPD,
Elson Lim, Environmental Engineer, Compliance Assessment and Media Programs Division (CAMPD), OC
Phyllis Flaherty, Chief, Compliance Monitoring and Water Programs Branch, CAMPD
Virginia Lathrop, Environmental Scientist, CM&WP Branch, CAMPD
Iliana Tamacas, Environmental Scientist, CM&WP Branch, CAMPD
Julie Tankersley, Environmental Protection Specialist, CM&WP Branch, CAMPD

Headquarters - Office of Regulatory Enforcement, Water Enforcement Division
Kevin Bell, Environmental Scientist
Lauren Kabler, Attorney Advisor
Sushila Nanda, Attorney Advisor
Roger Gorke, Environmental Protection Specialist, (on detail)

Headquarters - Office of Wastewater Managerment
Robert Bastian, Senior Environmental Scientist
Wendy Bell, Environmental Engineer,
Tim Dwyer, Environmental Engineeer,
Robin Kime, Environmental Protection Specialist,
Laura Phillips, Biologist, Water Permits, Division,
Jan Pickrel, Pretreatment Team Leader,
Alan Rubin Ph.D., Senior Scientist
John M. Walker Ph.D., Senior Physical Scientist,

Headquarters - Office of Science and Technology
Marion Kelly, Environmental Protection Specialist

Region III - Office of Compliance and Enforcement, Water Protection Division
Jon Hundertmark, Environmental Engineer,

Region IV
Mike Bowden, Environmental Engineer, Enforcement and Investigations Branch, Region Athens, GA
Ron Phelps, Region IV; Environmental Scientist, Enf. And Investigations Branch, Science and Ecosystems Support Division

Region VI -Compliance Assurance and Enforcement Division
Ken Aubuchon, Environmental Engineer
James H. Eng, Environmental Scientist
Juan Ibarra, Environmental Scientist
Phillip Jennings, Whole Effluent Toxicity Coordinator

Region IX
Steve Fuller, Water Inspector
Debra L. Denton Ph.D, Environmental Scientist

Region X
Jim Corpuz, Environmental Protection Specialist, NPDES Compliance Officer, Office of Water
Andy Hess, Environmental Scientist, Office of Env. Assessment, Investigations and Engineering Unit

Office of Research and Development, Duluth, MN
Teresa Norberg-King, Research Aquatic Biologist

National Enforcement Investigations Center (NEIC)
Doreen Au, Chemical Engineer
Linda TeKrony, Environmental Engineer
Daren Vanlerberghe, Environmental Engineer
Jacquelyn Vega, Environmental Engineer

This page intentionally left blank.

DISCLAIMER

The purpose of this guidance is to provide inspectors with an in-depth knowledge of the National Pollutant Discharge Elimination System (NPDES) inspection process. Specifically this manual provides information and references on the components necessary to complete the various types of NPDES inspections. Many of the chapters also include checklists. It is important that an inspector not rely solely on the checklist, but use it as one of the tools when conducting an inspection and evaluating compliance. Finally, the mention of trade names, commercial products, or organizations does not imply endorsement by the U.S. Government.

This page intentionally left blank.

TABLE OF CONTENTS

Contents Page

FOREWORD i
Manual Organization ii
ACKNOWLEDGMENTS iv
DISCLAIMER vii

1. INTRODUCTION

A. Purpose and Objectives 1-1
B. Legal Authority for NPDES Inspections 1-5
C. Responsibilities of the EPA NPDES Inspector 1-7
D. References 1-15

2. INSPECTION PROCEDURES

A. Pre-Inspection Preparation 2-1
B. Offsite Surveillance 2-11
C. Entry 2-13
D. Opening Conference 2-17
E. Documentation 2-21
F. Closing Conference 2-33
G. Inspection Report 2-35

3. DOCUMENTATION/RECORDKEEPING AND REPORTING

A. Inspection Authority and Objectives 3-1
B. Evaluation Procedures 3-3
C. Verification, Recordkeeping, and Reporting Evaluation Checklist 3-11
D. Digitized Video Clip - Records & Reports . . . . . (CD-Rom Insert in binder)

4. FACILITY SITE REVIEW

A. Objectives 4-1
B. Physical Inspection of the Facility 4-3
C. Operation and Maintenance Evaluation 4-17
D. References and Facility Site Review Checklist 4-27

5. SAMPLING

A. Evaluation of Permittee Sampling Program and Compliance Sampling 5-1
B. Sampling Procedures and Techniques 5-3
C. References and Permittee Sampling Inspection Checklist 5-25
D. Digitized Video Clip - Sampling . . . . . (CD-Rom Insert in binder)

6. FLOW MEASUREMENT

A. Evaluation of Permittee's Flow Measurement 6-1
B. Flow Measurement Compliance 6-5
C. References and Flow Measurement Inspection Checklist 6-14
D. Digitized Video Clip – Parshall Flume . . . . . (CD-Rom Insert in binder)

7. LABORATORY PROCEDURES AND QUALITY ASSURANCE

A. Objectives and Requirements 7-1
B. Sample Handling Procedures 7-3
C. Laboratory Analyses Techniques Evaluation 7-5
D. Quality Assurance and Quality Control 7-9
E. References and Laboratory Quality Assurance Checklist 7-15

8. TOXICITY

A. Objectives 8-1
B. Requirements of WET Testing 8-3
C. Analysis of Results 8-15
D. References 8-19

9. PRETREATMENT

A. Review of the General Pretreatment Regulations 9-1
B. Pretreatment Compliance Inspections (PCIs) and Audits 9-17
C. References 9-23

10. SEWAGE SLUDGE (Biosolids)

A. Review of the Sewage Sludge (Biosolids) Regulations 10-1
B. Sludge Inspection Procedures 10-12
C. References and Checklist 10-36

11. STORM WATER

A. Background and History 11-1
B. Storm Water Discharges Associated with Industrial Activity (Not Including Construction) 11-7
C. Storm Water Discharges Associated with Construction Activity 11-20
D. Storm Water Discharges From Municipal Separate Storm Sewer Systems 11-30
E. References 11-39

12. COMBINED SEWER OVERFLOWS

A. Background and History of the CSO Policy 12-1
B. CSO Inspection Procedures 12-5
C. References and Checklist 12-15

13. SANITARY SEWER OVERFLOWS

A. Overview of SSOs 13-1
B. SSO Inspection Procedures 13-5
C. References 13-11

14. POLLUTION PREVENTION

A. Overview of Pollution Prevention 14-1
B. Pollution Prevention Opportunity Assessment Procedures for Industrial Facilities 14-7
C. Pollution Prevention Assessment Procedures For Municipal Wastewater Treatment Plants 14-15
D. References and Checklist 14-19

15. MULTI MEDIA CONCERNS

A. Introduction 15-1
B. Overview of the Multi Media Approach to Inspections 15-3
C. Multi Media Concerns at NPDES Facilities and the Multi Media Screening Program 15-5
D. NPDES Inspectors and Multi Media Inspections 15-9
E. References and Worksheet 15-13

16. CONCENTRATED ANIMAL FEEDING OPERATIONS

A. Objectives 16-1
B. CAFO Regulation Overview 16-3
C. CAFO Inspection Overview 16-27
D. Multimedia Concerns 16-40
E. References 16-43

17. APPEARING AS A WITNESS

A. Introduction 17-1
B. Pre-Testimony Matters 17-1
C. Giving Testimony 17-3
D. Special Considerations 17-6

18. GLOSSARY OF TERMS 18-1

APPENDICES

A. EPA Order 3500.1, Training and Development for Compliance Inspectors/Field Investigators - see website: "http://intranet.epa.gov/oeca/oc/campd/inspector/index.html"
B. EPA Order 1440.2, Health and Safety Requirements for Employees Engaged in Field Activities - see website: "http://intranet.epa.gov/oeca/oc/campd/inspector/index.html"
C. Revised Fact Sheet: Safety and Health Requirements for EPA Inspectors "http://intranet.epa.gov/oeca/oc/campd/inspector/index.html"
D. EPA's Memorandum on Practices to Follow and Avoid When Requesting Information – "http://intranet.epa.gov/oeca/oc/campd/inspector/index.html"
E. Sample Section 308 Letter
F. Final Fact Sheet: The Do's and Don'ts of Using U.S. EPA Credentials "http://intranet.epa.gov/oeca/oc/campd/inspector/index.html"
G. EPA's Memorandum on Entry Procedures "http://intranet.epa.gov/oeca/oc/campd/inspector/index.html"
H. Digital Camera Guidance for EPA Civil Inspections and Investigations: "http://intranet.epa.gov/oeca/oc/campd/inspector/index.html"
I. EPA's Memorandum on Deficiency Notice Guidance
J. NPDES Compliance Inspection Report Form 3560-3
K. Sample Discharge Monitoring Report Form
L. Approved Methods for the Analysis of Sewage Sludge (40 *CFR* Part 503)
M. Example Chain-of-Custody Form
N. Updated Fact Sheet: Department of Transportation Hazardous Materials Training see website: "http://intranet.epa.gov/oeca/oc/campd/inspector/index.html"
O. Supplemental Flow Measurement Information

Stormwater Appendices P - X

P. NPDES Industrial Storm Water Investigation and Case Development Worksheet (Industrial)
Q. Industrial Source Control BMP Questions
R. NPDES Industrial Storm Water Investigation and Case Development Worksheet (Construction)
S. Construction Source Control BMP Questions
T. Notice of Intent (NOI) Form
U. Rain Zones of the United States
V. Typical "C" Coefficients
W. Notice of Termination (NOT) Form
X. No Exposure Certification Form
Y. Media-Specific Inspection Components Excerpted (and updated) from EPA's *Multi Media Investigation Manual*
Z. National Multi Media Screening Inspection Worksheet
AA. Bio-Security Guidance
BB. NPDES CAFO Permit NMP Nine Minimum Standards Review Checklist
CC. Integrated Compliance Information System (ICIS) Screen Shots

C-ROM in Binder Cover: NPDES Compliance Inspection Manual with three digitized videos: Records & Reports, Sampling, and Parshall Flume

LIST OF TABLES

Chapter/Table Page

1. INTRODUCTION

1-1. NPDES-Related Statutes and Regulations 1-6
1-2. Inspector's Responsibilities 1-9

2. INSPECTION PROCEDURES

2-1. List of Field Sampling Equipment 2-8

4. FACILITY SITE REVIEW

4-1. Operation and Maintenance Function Evaluation Questions 4-18

5. SAMPLING

5-1. Volume of Sample Required for Determination of the Various Constituents of Industrial Wastewater 5-5
5-2. Compositing Methods 5-8
5-3. Required Containers, Preservation Techniques, and Holding Times 5-11
5-4. Quality Control Procedures for Field Analysis and Equipment 5-20

8. TOXICITY

8-1. Recommended Sampling Strategies for Continuous and Intermittent Discharges for Flow-Through, Static Renewal, and Static Toxicity Tests 8-7

9. PRETREATMENT

9-1. Summary of the General Pretreatment Regulations 9-10
9-2. Categorical Pretreatment Standards 9-15

10. SEWAGE SLUDGE

10-1. Records Relevant for Sludge Operations 10-20
10-2. Operating Records for Specific Unit Processes 10-21
10-3. Sludge Sampling Points 10-23
10-4. Recordkeeping Requirements for Class A Pathogen Reduction Alternatives 10-27
10-5. Recordkeeping Requirements for Class B Pathogen Reduction Alternatives 10-29
10-6. Recordkeeping Requirements for Vector Attraction Reduction Sludge Processing Options 10-30
10-7. Sludge Handling Process Evaluation 10-31
10-8. Pollutants Monitored for Land Application, Surface Disposal,

and Incineration 10-35

11. STORM WATER

11-1. Summary of Storm Water Permitting Regulations 11-3
11-2. NPDES Storm Water Permit Application and Issuance Deadlines 11-4
11-3. Summary of Federal Permit Requirements Under the NPDES Storm Water Program 11-5
11-4. Important SIC Codes for Storm Water Discharges 11-15

12. COMBINED SEWER OVERFLOWS

12-1. Nine Minimum CSO Controls 12-3
12-2. Elements of the Long-Term CSO Control Plan 12-3
12-3. CSO Records 12-10
12-4. CSO Interview Questions 12-12

13. SANITARY SEWER OVERFLOWS

13-1. Documents to Review 13-10

14. POLLUTION PREVENTION

14-1. Useful Facility Information to Conduct a Pollution Prevention Opportunity Assessment 14-13

16. CONCENTRATED ANIMAL FEEDING OPERATIONS

16-1. Example Factors for Case-by-Case Designation 16-6
16-2. Thresholds for Cattle (Other than mature dairy cows) 16-7
16-3. Thresholds for Mature Dairy Cows 16-8
16-4. Thresholds for Swine (55 pounds or more) 16-8
16-5. Thresholds for Swine (Less than 55 pounds) 16-9
16-6. Thresholds for Horses 16-9
16-7. Thresholds for Sheep or Lambs 16-10
16-8. Thresholds for Turkey 16-10
16-9. Thresholds for Chickens (Operations with a liquid manure handling system) 16-11
16-10. Thresholds for Laying Hens (Operations with other than a liquid manure handling system) 16-11
16-11. Thresholds for Chickens Other Than Laying Hens (Operations with other than a liquid manure handling system) 16-12
16-12. Thresholds for Ducks (Operations with a liquid manure handling system) . 16-12
16-13. Thresholds for Ducks (Operations with other than a liquid manure handling system) 16-13
16-14. Elements of an NPDES Permit 16-14
16-15. Effluent Limitations Summary 16-17
16-16. NPDES CAFO Permit Minimum Practices 16-22
16-17. NPDES Large CAFO Permit Record-Keeping Requirements 16-24

LIST OF FIGURES

Chapter/Figure Page

4. FACILITY SITE REVIEW

4-1. General Waste Water Treatment Plant Flow Diagram 4-32

9. PRETREATMENT

9-1. Approval Authority vs. Control Authority 9-4

10. SEWAGE SLUDGE

10-1. Sludge Quality Requirements for Land Application Uses 10-8
10-2. Land Applied Sludge Requirements Based on Level of Treatment Achieved 10-9
10-2. Sludge Quality Requirements for Surface Disposal 10-10

11. STORM WATER

11-1. Industrial Categories Associated With Industrial Activity 11-17
11-2. Site-Specific Industrial Storm Water BMPs 11-19
11-3. Site-Specific Construction Storm Water BMPs 11-28

14. POLLUTION PREVENTION

14-1. Waste Management Hierarchy 14-5
14-2. Benefits of Pollution Prevention 14-6
14-3. Pollution Prevention Opportunity Assessment 14-12

This page intentionally left blank.

LIST OF ABBREVIATIONS

Abbreviation	Full Phrase
AFO	Animal Feeding Operation
APHA	American Public Health Association
API	American Petroleum Institute
APWA	American Public Works Association
ASTM	American Society for Testing and Materials
AWWA	American Water Works Association
AU	Animal Unit
BAT	Best Available Technology Economically Achievable
BCT	Best Conventional Pollutant Control Technology
BMP	Best Management Practice
BMR	Baseline Monitoring Report
BOD	Biochemical Oxygen Demand
BPJ	Best Professional Judgement
BPT	Best Practicable Control Technology Currently Available
CAA	Clean Air Act
CAFO	Concentrated Animal Feeding Operation
CBI	Compliance Biomonitoring Inspection
CBI	Confidential Business Information
CEI	Compliance Evaluation Inspection
CEM	Continuous Emission Monitoring
CERCLA	Comprehensive Environmental Response, Compensation, and Liability Act
CERI	Center for Environmental Research Information
CFR	*Code of Federal Regulations*
CFSA	Conservation Farm Service Agency
CGP	Construction General Permit
ChV	Chronic Value
CIP	Capital Improvement Project
CIU	Categorical Industrial Users
CMOM	Capacity, Management, Operation, and Maintenance
CNMP	Comprehensive Nutrient Management Plan
COD	Chemical Oxygen Demand
COM	Continuous Opacity Monitoring
CPLR	Cumulative Pollutant Loading Rate
CRC	Cyclic Redundancy Check
CSI	Compliance Sampling Inspection
CSO	Combined Sewer Overflow
CSS	Combined Sewer System
CWA	Clean Water Act
CWAP	Clean Water Action Plan
CWF	Combined Wastestream Formula
CZARA	Coastal Zone Act Reauthorization Amendment
DI	Diagnostic Inspection
DMR	Discharge Monitoring Report
DO	Dissolved Oxygen
DOI	Department of Interior
DOT	Department of Transportation
DSS	Domestic Sewage Study
DWO	Dry Weather Overflow

EC_{50}	Concentration that causes an effect in 50% of the test organisms
EMS	Emergency Management System
EMSL	Environmental Monitoring Systems Laboratory
EPA	Environmental Protection Agency
EPCRA	Emergency Planning and Community Right to Know Act
EQIP	Environmental Quality Incentive Program
ERP	Enforcement Response Plan
FIFRA	Federal Insecticide, Fungicide, and Rodenticide Act
FINDS	Facility Index System
FOIA	Freedom of Information Act
FR	*Federal Register*
FY	Fiscal Year
GC	Gas Chromatography
GC/MS	Gas Chromatography/Mass Spectroscopy
GIS	Geographic Information System
GPS	Global Positioning System
HPLC	High Performance Liquid Chromatography
I&I	Inflow/Infiltration
IC_{25}	Inhibition Concentration
ICDS	Inspection Conclusion Data Sheets
ICIS	Integrated Compliance Information System
ICP	Inductively Coupled Plasma
IATA	International Air Transportation Association
IU	Industrial User
LC	Lethal Concentration
LC	Liquid Chromatography
LC_{50}	Concentration at which 50% of the test organisms die in a specified time period
LD_{50}	Dose at which 50% of the test organisms die in a specific time period
LDR	Land Disposal Restrictions
LOEC	Lowest-Observed-Effect-Concentration
LSI	Legal Support Inspection
LTCP	Long-Term Control Plan
LVE	Low Volume Exemption
MCL	Maximum Contaminant Level
MEP	Maximum Extent Practicable
MGD	Million Gallons per Day
MIT	Mechanical Integrity Testing
MLSS	Mixed Liquor Suspended Solids
MPN	Most Probable Number
MS4	Municipal Separate Storm Sewer System
MSGP	Multi-Sector General Permit
MSSCC	Maryland State Soil Conservation Committee
MSWLF	Municipal Solid Waste Landfill
MWCOG	Metropolitan Washington Council of Governments
MWPP	Municipal Water Pollution Prevention
N/A	Not Applicable
NAAQS	National Ambient Air Quality Standards
NEIC	National Enforcement Investigation Center
NESHAPS	National Emission Standards for Hazardous Air Pollutants
NHPA	National Historic Preservation Act
NIOSH	National Institute for Occupational Safety and Health

NIST	National Institute of Standards and Technology
NITS	National Institute of Technology and Standardization
NOAA	National Oceanic and Atmospheric Administration
NOC	Notice of Commencement
NOEC	No Observable Effect Concentration
NOI	Notice of Intent
NOT	Notice of Termination
NPDES	National Pollutant Discharge Elimination System
NPS	Nonpoint Source
NRCS	Natural Resources Conservation Service
NRDC	Natural Resources Defense Council
NSPS	New Source Performance Standards
NURP	National Urban Runoff Program
O&M	Operations and Maintenance
OECA	Office of Enforcement and Compliance Assurance
OSHA	Occupational Safety and Health Administration
PAI	Performance Audit Inspection
PC	Pollutant Concentration
PCB	Polychlorinated Biphenyl
PCI	Pretreatment Compliance Inspection
PCS	Permit Compliance System
PFRP	Processes to Further Reduce Pathogens
PIES	Pollution Information Exchange System
PIRT	Pretreatment Implementation Review Task Force
PL	Public Law
PMN	Premanufacture Notification
POTW	Publicly Owned Treatment Works
PPE	Personal Protective Equipment
PPETS	Pretreatment Permits and Enforcement Tracking System
PPIC	Pollution Prevention Information Clearinghouse
PQL	Practical Quantification Limit
PRRS	Porcine Reproductive and Respiratory Syndrome
PSD	Prevention of Significant Deterioration
PSRP	Processes to Significantly Reduce Pathogens
QA	Quality Assurance
QC	Quality Control
QNCR	Quarterly Noncompliance Report
R&D	Research and Development
RBC	Rotating Biological Contactor
RCRA	Resource Conservation and Recovery Act
RI	Reconnaissance Inspection
RMP	Risk Management Plan

RNC	Reportable Noncompliance
SARA	Superfund Amendments and Reauthorization Act
SCADA	Supervisory Control and Data Acquisition
SCP	Slug Control Plan
SDWA	Safe Drinking Water Act
SFL	Sheet Flow
SHPO	State Historic Preservation Officer
SIC	Standard Industrial Classification
SIP	State Implementation Plan
SIU	Significant Industrial User
SMCRA	Surface Mining Control and Reclamation Act
SNC	Significant Noncompliance
SNUR	Significant New Use Rule
SOUR	Specific Oxygen Uptake Rate
SPCC	Spill Prevention Control and Countermeasure Plan
SS	Suspended Solids
SSO	Sanitary Sewer Overflow
SU	Standard Unit
SW-846	Standard Methods for Evaluating Solid Waste Physical/Chemical Methods
SWPPP	Storm Water Pollution Prevention Plan
TCLP	Toxicity Characteristic Leaching Procedure
TDDP	Treatment, Destruction, and Disposal Facility
THPO	Tribal Historic Preservation Officer
TIE	Toxicity Identification Evaluation
TKN	Total Kjeldahl Nitrogen
TMDL	Total Maximum Daily Load
TME	Test Marketing Exemption
TOC	Total Organic Carbon
TRC	Total Residual Chlorine
TRE	Toxicity Reduction Evaluation
TS	Total Solids
TSCA	Toxic Substances Control Act
TSDF	Treatment, Storage, and Disposal Facility
TSS	Total Suspended Solids
TU	Toxicity Unit
Tu_a	Acute Toxic Unit
Tu_c	Chronic Toxic Unit
TVS	Total Volatile Solids
UA	Urbanized Area
UAA	Use Attainability Analysis
UIC	Underground Inspection Control
USC	United States Code
USDA	United States Department of Agriculture
USDI	United States Department of Interior
USDW	Underground Source of Drinking Water
USEPA	United States Environmental Protection Agency
USGS	United States Geological Survey

UST	Underground Storage Tank
VEO	Visible Emission Observation
VOC	Volatile Organic Compound
WEF	Water Environment Federation
WENDB	Water Enforcement Data Base
WET	Whole Effluent Toxicity
WLA	Wastesload Allocation
WPCF	Water Pollution Control Federation
WQA	Water Quality Act
WQBEL	Water Quality-Based Effluent Limit
WQS	Water Quality Standards
WRATT	Waste Reduction Assessment and Technology Transfer
WWTP	Wastewater Treatment Plant
XSI	Toxics Sampling Inspection
ZID	Zone of Dilution

This page intentionally left blank.

1. INTRODUCTION

Contents Page

A. Purpose and Objectives 1-1
Inspection Types 1-1

B. Legal Authority for NPDES Inspections 1-5
Inspection Authority 1-5
State Program Authority 1-5

C. Responsibilities of the EPA NPDES Inspector 1-7
Indian Country Inspections 1-7
Legal Responsibilities 1-7
Procedural Responsibilities 1-8
Training Responsibilities 1-10
Safety Responsibilities 1-11
Professional Responsibilities 1-11
Quality Assurance Responsibilities 1-13

D. References 1-15

List of Tables

1-1. NPDES-Related Statutes and Regulations 1-6
1-2. Inspector's Responsibilities 1-9

Associated Appendices

A. EPA Order 3500.1, Training and Development for Individuals who lead Compliance Inspections/Field Investigations
B. EPA Order 1440.2, Health and Safety Requirements for Employees Engaged in Field Activities
C. Revised Fact Sheet: Safety and Health Requirements for EPA Inspectors

Each of the above documents can be found at
"http://intranet.epa.gov/oeca/oc/campd/inspector/index.html"

This page intentionally left blank.

1. A. Purpose and Objectives

Three objectives should be met during a routine compliance inspection. According to this section, the inspection should be performed in a manner designed to:

- Determine compliance status with regulations, permit conditions, and other program requirements
- Verify the accuracy of information submitted by permittees
- Verify the adequacy of sampling and monitoring conducted by the permittee.

Other purposes of compliance inspections include:

- Gathering evidence to support enforcement actions
- Obtaining information that supports the permitting process
- Assessing compliance with orders or consent decrees.

Inspection Types

This manual provides guidance applicable to each type of inspection a National Pollutant Discharge Elimination System (NPDES) inspector may be required to conduct at a NPDES permitted facility or an unpermitted facility with discharges. The different types of inspections are described below.

Compliance Evaluation Inspection (CEI)

The CEI is a nonsampling inspection designed to verify permittee compliance with applicable permit self-monitoring requirements, effluent limits, and compliance schedules. Inspectors must review records, make visual observations and evaluate treatment facilities, laboratories, effluents and receiving waters. During the CEI, the inspector must examine both chemical and biological self-monitoring, which form the basis for all other inspection types except the Reconnaissance Inspection.

Compliance Sampling Inspection (CSI)

During the CSI, NPDES permitted or unpermitted facilities, inspectors must take representative samples. Inspectors then verify the accuracy of the permittee's self-monitoring program and reports through chemical and bacteriological analysis; determine compliance with discharge limitations; determine the quantity and quality of effluents; develop permits; and provide evidence for enforcement proceedings where appropriate. In addition, the CSI includes the same objectives and tasks as a CEI.

Performance Audit Inspection (PAI)

The inspector conducts a PAI to evaluate the permittee's self-monitoring program. As with a CEI, the PAI verifies the permittee's reported data and compliance through a records check. However, the PAI provides a more resource-intensive review of the permittee's self-monitoring program and evaluates the permittee's procedures for sample collection, flow measurement, chain-of-custody, laboratory analyses, data compilation, reporting, and other areas related to

the self-monitoring program. In a CEI, the inspector makes a cursory visual observation of the treatment facility, laboratory, effluents, and receiving waters. In a PAI, the inspector observes the permittee performing the self-monitoring process from sample collection and flow measurement through laboratory analyses, data workup, and reporting. The PAI does not include the collection of samples by the inspector. However, the inspector may require the permittee to analyze performance samples for laboratory evaluation purposes.

Compliance Biomonitoring Inspection (CBI)

This inspection includes the same objectives and tasks as a CSI. A CBI reviews a permittee's toxicity bioassay techniques and records maintenance to evaluate compliance with the biomonitoring terms of the NPDES permit and to determine whether the permittee's effluent is toxic. The CBI also includes the collection of effluent samples by the inspector to conduct acute and chronic toxicity testing to evaluate the biological effect of a permittee's effluent discharge(s) on test organisms.

Toxics Sampling Inspection (XSI)

The XSI has the same objectives as a conventional CSI. However, it places increased emphasis on toxic substances regulated by the NPDES permit. The XSI covers priority pollutants other than heavy metals, phenols, and cyanide, which are typically included in a CSI (if regulated by the NPDES permit). An XSI uses more resources than a CSI because sophisticated techniques are required to sample and analyze toxic pollutants. An XSI may also evaluate raw materials, process operations, and treatment facilities to identify toxic substances requiring controls.

Diagnostic Inspection (DI)

The DI primarily focuses on Publicly Owned Treatment Works (POTWs) that have not achieved permit compliance. POTWs that are having difficulty diagnosing their problems are targeted. The purposes of the DI are to identify the causes of noncompliance, suggest immediate remedies that will help the POTW achieve compliance, and support current or future enforcement action. Once the cause of noncompliance is defined, an administrative order is usually issued that requires the permittee to conduct a detailed analysis and develop a composite correction plan.

Reconnaissance Inspection (RI)

The RI is used to obtain a preliminary overview of a permittee's compliance program. The inspector performs a brief visual inspection of the permittee's treatment facility, effluents, and receiving waters. The RI uses the inspector's experience and judgement to summarize quickly any potential compliance problems. The objective of the RI is to expand inspection coverage without increasing inspection resources. The RI is the briefest and least resource intensive of all NPDES inspections.

Pretreatment Compliance Inspection (PCI)

The PCI evaluates the POTW's implementation of its approved pretreatment program. It includes a review of the POTW's records on monitoring, inspections, and enforcement activities for its industrial users (IUs). The PCI may be supplemented with IU inspections. An IU inspection is an inspection of any significant IU that discharges to the POTW. The inspection can include sampling or not, depending on the reason for the inspection. If feasible, inspectors should conduct the PCI concurrently with another NPDES inspection of the POTW. Additional guidance is available in EPA's *Guidance for Conducting a Pretreatment Compliance Inspection* (September 1991).

It should be noted that a related type of review procedure, the pretreatment audit, is also performed by Approval Authorities. The pretreatment audit is not treated in depth in this manual because it is not regarded as a true NPDES compliance inspection. The pretreatment audit is defined and discussed in Section 1.2, page 1-1, of EPA's guidance manual *Pretreatment Compliance Inspection and Audit Manual for Approval Authorities* (July 1986) and the *Control Authority Pretreatment Audit Checklist and Instructions* (May 1992).

Follow-up Inspection

The follow-up inspection is a resource intensive inspection conducted when an enforcement problem is identified as a result of a routine inspection or a complaint. For a follow-up inspection, the appropriate resources are assembled to deal effectively with a specific enforcement problem.

Sewage Sludge Inspection

The objectives of a sewage sludge inspection are to determine compliance with Federal 503 sludge regulations for any facility engaged in a regulated sludge or disposal practice and to evaluate the permittee's compliance with sludge monitoring, recordkeeping and reporting, treatment operations, and sampling and laboratory quality assurance. The PCI, CEI, and PAI are the most likely vehicles for evaluating compliance with sludge requirements.

Storm Water Inspection

Storm water inspections are designed to ensure that regulated facilities have a NPDES permit for storm water discharge and a Storm Water Pollution Prevention Plan (SWPPP) and are following the specifications in each. During the inspection, the inspector reviews the permit and the SWPPP and determines whether the SWPPP meets the requirements set forth in the permit. The inspector also reviews records, such as self-inspection reports, to verify that the facility is complying with its permit and the SWPPP and walks the site to verify that the SWPPP is accurate and BMPs are in place and functioning properly.

Combined Sewer Overflow (CSO) Inspection

During a CSO inspection, the inspector evaluates compliance with CSO provisions present in the NPDES permit, an enforcement order, a consent decree, or another enforceable document. The inspector verifies that the permittee is preventing CSOs during dry weather, implementing the nine minimum CSO controls, adhering to a schedule for development, submission, and implementation of a Long-Term CSO Control Plan, eliminating or relocating overflows from sensitive areas, adhering to effluent limitations, and implementing a monitoring program.

Sanitary Sewer Overflow (SSO) Inspection

During an SSO inspection, the inspector evaluates compliance with SSO provisions present in the NPDES permit, an enforcement order, a consent decree, or another enforceable document. The inspector collects information to verify that the permittee is complying with the NPDES standard permit conditions (duty to mitigate and proper operation and maintenance) and the required notification procedures. The inspector also determines whether there have been any unpermitted discharges, or discharges from a location other than the discharge point specified in the permit, to waters of the United States.

Concentrated Animal Feeding Operation (CAFO) Inspection

The objective of this inspection is to evaluate a CAFO's compliance with permit requirements, permit conditions, applicable regulations, and other requirements. The three types of CAFO inspections are the Status Determination Inspection, the Permit Compliance Inspection, and the Settlement Agreement Inspection. The type of information that the inspector gathers depends on the type of CAFO inspection being conducted.

Summary

The inspector should plan all activities and coordinate with the appropriate compliance personnel in their office before the inspection. The type of inspection may serve as a basis for deciding what activities will be conducted onsite and for determining what additional information is to be gathered or verified during the inspection. Compliance personnel should choose the type of inspection to be conducted based on the compliance status of the facility, the information needed from the facility, and the type of facility involved. Note that some types of NPDES inspections may encompass several elements of the primary inspection types (e.g., a storm water inspection may encompass elements from both a CSI and a PAI).

1. B. Legal Authority for NPDES Inspections

The Federal Water Pollution Control Act of 1972, as amended by the Clean Water Act (CWA or the Act) of 1977 and the Water Quality Act of 1987, gives EPA the authority to regulate the discharge of pollutants to waters of the United States. The Act provides broadly defined authority to establish the NPDES Permit Program, define pollution control technologies, establish effluent limitations, obtain information through reporting and compliance inspections, and take enforcement actions (both civil and criminal) when violations of the Act occur. Table 1-1 provides a listing of applicable NPDES statute and regulations.

Inspection Authority

Under Section 402 of the Act, point source dischargers of pollutants (e.g., municipal wastewater treatment plants, industries, animal feedlots, aquatic animal production facilities, and mining operations) facilities must apply and receive a permit that set specific limits and operating conditions to be met by the permittee. Section 308 authorizes inspections and monitoring to determine whether the facility is meeting the NPDES permit conditions. This section provides for two types of monitoring:

- Self-monitoring, where the facility must monitor itself
- Monitoring by EPA or the State, a process whereby the agency evaluates the self-monitoring and/or conducts its own monitoring.

According to the CWA, EPA may conduct an inspection, including storm water, sludge, combined sewer overflows, sanitary sewer overflows, concentrated animal feeding operations, or pretreatment, wherever there is an existing NPDES permit or where a discharge exists or is likely to exist and no permit has been issued.

State Program Authority

Much of the compliance with the NPDES program is monitored by the State. Sections 308 and 402 of the Act allow for the delegation of Federal program authority to States to conduct NPDES permit compliance monitoring, permit issuance, and permit enforcement; but EPA does not relinquish its control authority even when a program has been authorized to the State. EPA Regional Administrators and some State water pollution control agencies have signed formal cooperative agreements that ensure timely, accurate monitoring of compliance with permit conditions. States may implement requirements and regulations that are more stringent than those under the CWA.

Table 1-1

NPDES-Related Statutes and Regulations

Topic	Reference	
	CWA[1]	40 *CFR*[2]
Inspection Authority	§308	122.41(i), 123.26
Self-Monitoring and Recordkeeping Authority	§308	122.41(h), (j), and (l), 122.48
Confidential Information	§308(b)	2.201, 2.215, 2.302, 122.7
Emergency Authority	§504	123.27
Employee Protection	§507	____
Permits	§402	122, 123.25
EPA Permitting Procedures	§402	124
Technical Requirements	§§301, 304, 307	129, 133, 136
Best Management Practices (BMP)	§304(e)	125
Spill Prevention Control and	§311	112
Countermeasure (SPCC) Plan Waivers	§301	125, 230
Effluent Guidelines	§304	405-471
Pretreatment Standards	§§307, 402(m)	122.21, 403, and 405-471
Biosolids	§405	60, 61, 123, 258, 501, and 503

[1] Clean Water Act
[2] Code of Federal Regulations, Revised as of July 1, 2002

1. C. Responsibilities of the EPA NPDES Inspector

The primary role of a NPDES inspector is to gather information that can be used to determine the reliability of the permittee's self-monitoring data and evaluate compliance with permit conditions, applicable regulations, and other requirements. The NPDES inspector also plays an important role in case development and support. To fulfill these roles, inspectors are required to know and use policies and procedures for effective inspection and evidence collection; accepted safety practices; and quality assurance standards.

Indian Country Inspections

Each regional inspector should understand and apply the *EPA Policy for the Administration of Environmental Programs on Indian Reservations* (Indian Policy - November 8, 1984) www.epa.gov/indian/1984.htm and their region's policies and procedures when conducting inspections in Indian country. If the facility is in Indian country, the inspector should research this. If a facility is owned or managed by a tribal government or owned and managed by a private party, EPA generally will notify tribal governments in advance of visiting a reservation and EPA will inform the tribal government of the results each inspection. If advance notice is not possible due to circumstances beyond the control of the EPA inspector or if the visit involves an unannounced inspection, the tribal government should be contacted as soon as possible. EPA should address out-of-compliance facilities that are located in Indian country (and/or owned or managed by a tribal government) in a manner consistent with the Indian Policy, the *Guidance on the Enforcement Principles Outlined in the 1984 Indian Policy*, (January 17, 2001), The enforcement guidance is located at www.epa.gov/compliance/planning/tribal/index.html. Regions should also be familiar with the American Indian Environmental Office's website www.epa.gov/indian. EPA Indian program contacts are located at www.epa.gov/indian/miss.htm. They can help identify facilities in Indian country. Please be aware that while it is often very difficult to identify these facilities, EPA should still follow the applicable guidance vis-a-vis working with tribes.

Legal Responsibilities

Inspectors must conduct all inspection activities within the legal framework established by the Act, including:

- Presenting proper credentials
- Properly handling confidential business information.

Inspectors also must be familiar with the conditions of the specific permit, CWA, and regulations.

Procedural Responsibilities

Inspectors must be familiar with general inspection procedures and evidence collection techniques to ensure adequate inspections and to avoid endangering potential legal proceedings on procedural grounds.

Inspection Procedures

Inspectors should observe standard procedures for conducting each inspection element. The elements of the inspection process listed in Table 1-2 are common to most NPDES compliance inspections. They are grouped by the major inspection activities:

- Pre-Inspection Preparation
- Entry
- Opening Conference
- Facility Inspection
- Closing Conference
- Inspection Report.

Table 1-2

Inspector's Responsibilities

Pre-Inspection Preparation.

– Establish purpose and scope of inspection.
– Review background information and EPA/State records, including permit and permittee compliance file.
– Develop plan for inspection.
– Prepare documents and equipment, including appropriate safety equipment.
– Coordinate schedule with laboratory if samples are to be collected.
– Coordinate schedule with other appropriate regulatory authorities.
– Contact party responsible for sample transportation, for packing/shipping requirements.
– Ensure state/tribe is notified of pending inspection.

Entry. Establish legal entry to facility.

– Identify self and present official credentials to the responsible official.
– If denied of entry call supervisor /ORC.

Opening Conference. Orient facility officials to inspection plan.

– Discuss inspection objectives and scope.
– Establish working relationship with facility officials.

Facility Inspection. Document compliance/noncompliance with permit conditions; collect evidence including photographs.

– Conduct visual inspection of facility.
– Review facility records.
– Inspect monitoring location, equipment, and operations.
– Collect samples, if appropriate.
– Review laboratory records for QA/QC.
– Review laboratory procedures to verify analytical methodology and use of approved methods.
– Document inspection activities.

Closing Conference. Conclude inspection.

- Collect additional or missing information.
- Clarify questions with facility officials.
- Prepare necessary receipts.
- Review inspection findings and inform officials of follow-up procedures.
- Issue deficiency notice, if appropriate.

Inspection Report. Organize inspection findings in a report with field notes, file, photographs, and other relevant information.

- Complete NPDES Compliance Inspection Report Form 3560.
- Prepare narrative report, checklists, and documentary information as appropriate.
- Sign and date the report

Evidence Collection

Inspectors must be familiar with general evidence-gathering techniques. Because the Government's case in a civil, criminal, or administrative enforcement action depends on the evidence gathered, inspectors must keep detailed records of each inspection. These notes and documentation will be used for preparing the inspection report, determining the appropriate enforcement response, and giving testimony in an enforcement case.

In particular, inspectors must know how to:

- Substantiate facts with items of evidence, including samples, photographs, document copies, statements from witnesses, and personal observations.

- Evaluate what evidence should be collected (routine inspections).

- Follow chain-of-custody procedures

- Collect and preserve evidence consistent with Chapter 5 – Sampling.

- Write clear, objective, and informative inspection reports

Inspection procedures are discussed in detail in Chapter Two of this manual.

Training Responsibilities

EPA Order 3500.1 establishes consistent EPA-wide training and development programs for employees leading environmental compliance inspections/field investigations to ensure that they have working knowledge of regulatory requirements, inspection methodology, and health and safety measures. Those who lead environmental compliance inspections/field investigations must be properly trained to perform these functions in a legally and technically sound manner. This Order applies to all Environmental Protection Agency (EPA) personnel who lead or oversee compliance inspections/field investigations on a full or part-time basis under any of EPA's statutes, and supervisors of compliance inspectors/field investigators. Training required by the Order consists of three parts: Occupational Health and Safety

Curriculum, Basic Inspector Curriculum, and Program-Specific Curriculum. (See Appendix A)

Safety Responsibilities

The inspection of wastewater and other environmental pollution control facilities always poses a certain degree of health and safety risk. To avoid unnecessary risks, the inspector should be familiar with all safety obligations and practices. The safety equipment and procedures required for an inspector will be based on either standard safety procedures or the facility response to the 308 (inspection notification) Letter. Inspectors should do the following:

- Use safety equipment in accordance with available guidance and labeling instructions.
- Maintain safety equipment in good condition and proper working order.
- Dress appropriately for the particular activity and wear appropriate protective clothing. For example, appropriate protective gloves should be worn during sample collection to protect the inspector and to prevent the potential for sample contamination. Disposable gloves are preferred to assure that no cross contamination occurs between sampling points.
- Use any safety equipment customary in the establishment being inspected (e.g., hard hat or safety glasses).
- Never enter confined spaces unless properly trained, equipped, and permitted (if applicable).

For any safety-related questions not covered in this manual, the inspector should comply with the facility's current approved safety requirements for greater detail if one is available. An inspector should look at Appendix B which contains the website: "http://intranet.epa.gov/oeca/oc/campd/inspector/index.html" to locate EPA's Order 1440.2, Health and Safety Requirements for Employees Engaged in Field Activities. Also, Appendix C contains a fact sheet on safety and health requirements for EPA inspectors.

Professional Responsibilities

Inspectors are expected to perform their duties with the highest degree of professionalism. Procedures and requirements ensuring ethical actions have been established through many years of Government inspection experience. The procedures and standards of conduct listed below have evolved for the protection of the individual and EPA, as well as industry.

- All inspections are to be conducted within the framework of the United States Constitution and with due regard for individual rights regardless of race, sex, religion, or national origin.
- EPA inspectors are to conduct themselves at all times in accordance with the regulations prescribing employee responsibilities and conduct.
- The facts of an inspection are to be noted and reported completely, accurately, and

objectively.

- In the course of an inspection, any act or failure to act motivated by reason of private gain is illegal. Actions that could be construed as such should be scrupulously avoided.

- A continuing effort should be made to improve professional knowledge and technical skill in the inspection field.

Professional Attitude

The inspector is a representative of EPA and is often the initial or only contact between EPA and the permittees. In dealing with facility representatives and employees, inspectors must be professional, tactful, courteous, and diplomatic. A firm but responsive attitude will encourage cooperation and initiate good working relations. Inspectors should always speak respectfully of any product, manufacturer, or person.

Attire

Inspectors should dress appropriately, including wearing protective clothing or equipment for the activity in which they are engaged.

Gifts, Favors, Luncheons

Inspectors may not accept favors, benefits, or job offers under circumstances that might be construed as influencing the performance of governmental duties. It is prudent to avoid even the appearance of compromising federal ethics statutes and regulations. If offered a bribe, the inspector must not accept money or goods. Since this act may violate federal laws, regulations and may also violate criminal statute, report the incident in detail as soon as possible to a supervisor and the Deputy Ethics Officials (DEO). A list of the DEOs is at intranet.epa.gov/ogc/ethics.htm - first left radio-button. If it appears that a federal criminal statute was violated, report this right away to the EPA's Office of the Inspector General. (OIG information is at www.epa.gov/oigeatrth/whoswho.htm)

The EPA website on ethics at intranet.epa.gov/ogc/ethics.htm contains extensive information on conflicts of interest, gifts and luncheons. It is recommended that each inspector go to the Resource Library section and review information in the Conflict of Interest (especially the 2002 Ethics Conference Materials), Gifts and Travel sections.

Note also that it is prudent for EPA inspectors to decline business luncheons while on EPA business. The inspector must pay his/her own fees for meals. When in doubt about a possible issue, contact a Deputy Ethics Official to clarify what can and cannot be accepted and report any possible infraction of the ethics statutes and rules. (See page 20, *U.S. EPA Guidance on Ethics and Conflict of Interest*, February 1984, and 5 *CFR* 2635, Standards of Ethical Conduct for Employees of the Executive Branch, January 1, 2001.)

Requests for Information

EPA has an "open-door" policy on releasing information to the public. This policy is to make information concerning EPA and its work freely and equally available to all interested

individuals, groups, and organizations. In fact, EPA employees have both a legal and traditional responsibility for making useful educational and safety information available to the public. This policy, however, does not extend to information about a suspected violation, evidence of possible misconduct, or confidential business information. The disclosure of information is discussed further in Chapter Two, Disclosure of Official Information.

Quality Assurance Responsibilities

The inspector must assume primary responsibility for ensuring the quality and accuracy of the compliance inspection and the integrity of samples collected. While other organizational elements play an important role in quality assurance, it is the inspector who must ensure that all data introduced into an inspection file are complete, accurate, and representative of existing conditions. To help the inspector meet this responsibility, Regional Offices have established quality assurance plans that identify individual responsibilities and document detailed procedures.

The objective of a quality assurance plan is to establish standards that will guarantee that inspection and analytical data meet the requirements of all users. Many elements of quality assurance plans are incorporated directly into the basic inspection procedures and may not be specifically identified as quality assurance techniques.

The inspector must be aware that following established inspection procedures are critical to the inspection program. These procedures have been developed to reflect the following quality assurance elements:

- Valid data collection
- Approved standard methods
- Control of service, equipment, and supplies
- Standard data handling and reporting.

This page intentionally left blank.

1. D. References

References

U.S. Environmental Protection Agency. July 1986. *Pretreatment Compliance Inspection and Audit Manual for Approval Authorities*. EPA 833/B-86-100

U.S. Environmental Protection Agency. September 1991. *Guidance for Conducting a Pretreatment Compliance Inspection*. EPA 300/R-92-009

U.S. Environmental Protection Agency. May 1992. *Control Authority Pretreatment Audit Checklist and Instructions*. http://cfpub1.epa.gov/npdes/docs.cfm?program_id=3&view=allprog&sort=name

U.S. Environmental Protection Agency. February 1999. *Introduction to the National Pretreatment Program.* EPA 833-B-98-002

U.S. Environmental Protection Agency. June 25,2003. *Role of the EPA Inspector in Providing Compliance Assistance During Inspections*.

This page intentionally left blank.

2. INSPECTION PROCEDURES

Contents Page

A. Pre-Inspection Preparation 2-1
Review of Facility Background Information 2-1
Sources of Facility Background Information 2-4
Development of an Inspection Plan 2-5
Notification of the Facility 2-6
State Notification of Federal Inspection 2-6
Preparation of Equipment and Supplies 2-6

B. Offsite Surveillance 2-10
Considerations 2-11

C. Entry 2-12
Entry Procedures 2-12
Problems With Entry or Consent 2-13
Warrants 2-15

D. Opening Conference 2-16
Considerations 2-16

E. Documentation 2-20
Inspector's Field Notebook 2-20
Samples 2-21
Statements 2-21
Photographs 2-22
Videotapes 2-24
Drawings and Maps 2-24
Printed Matter 2-24
Mechanical Recordings 2-25
Copies of Records 2-25
General Considerations 2-26
Confidential Information 2-27

F. Closing Conference 2-32
Precautions and Guidelines 2-32
Deficiency Notice 2-32

G. Inspection Report 2-34
Objective of the NPDES Inspection Report 2-34
Effectively Communicate and Document an Alleged Violation in the Inspection Report 2-34
Elements of a Report 2-36
The Permit Compliance System (PCS)/Integrated Compliance Information

System (ICIS) 2-38

List of Tables

2-1 List of Field Sampling Equipment 2-8

Associated Appendices

D. EPA's Memorandum on Practices to Follow and Avoid When Requesting Information
E. Sample Section 308 Letter
F. Final Fact Sheet: The Do's and Don'ts of using U.S. EPA Credentials
G. EPA's Memorandum on Entry Procedures
H. EPA's Policy on the Use of Digital Cameras for Inspections - after policy is finalize it will be posted on the Inspector Website- http://intranet.epa.gov/oeca/oc/campd/inspector/index.html
I. EPA's Memorandum on Deficiency Notice Guidance
J. NPDES Compliance Inspection Report Form 3560-3

Related Website

U.S. EPA's Office of Compliance Inspector Website:
http://intranet.epa.gov/oeca/oc/campd/inspector/index.html

2. A. Pre-Inspection Preparation

Pre-planning is necessary to ensure that the inspection is focused properly and is conducted smoothly and efficiently. It involves:

- Review of facility background information
- Development of an inspection plan
- Notification of the facility, if applicable
- Notification to the State of Federal inspection
- Preparation of Equipment

Review of Facility Background Information

Collection and analysis of available background information on the candidate facility are essential to the effective planning and overall success of a compliance inspection. Materials from available files, company web sites, and other information sources will enable inspectors to familiarize themselves with facility operations; conduct a timely inspection; minimize inconvenience to the facility by not requesting data previously provided; conduct a thorough and efficient inspection; clarify technical and legal issues before entry; and develop a sound and factual inspection report. The types of information that may be available for review are listed below. The inspector must determine the amount of background information necessary for the inspection and in collecting this information, should focus on the characteristics unique to the permittee: design, historical practices, legal requirements, etc.

General Facility Information

- Maps showing facility location, plumbing including wastewater discharge pipes, sampling points, overflow and bypass points, and geographic features
- Plant layout and process flow diagram
- Names, titles, and telephone numbers of responsible facility officials
- Any special entry requirements
- Any safety requirements
- Description of processing operations and wastewater discharges
- Production levels—past, present, and future
- Hydrological data
- Geology/hydro-geology of the area
- Changes in facility conditions since previous inspection/permit application
- Available aerial photographs.

Requirements, Regulations, and Limitations

- Copies of existing permits, regulations, requirements, and restrictions placed on permittee discharges
- Monitoring and reporting requirements and available monitoring stations
- Special exemptions and waivers, if any
- Receiving stream water quality standards
- Information concerning sludge, air, solid, and hazardous waste treatment and disposal.

Facility Compliance and Enforcement History

- Previous inspection reports
- Correspondence among facility, local, State, and Federal agencies
- Complaints and reports, follow-up studies, findings, and remedial action
- Documentation on past compliance violations, exceedences, status of requested regulatory corrective action, if any
- Enforcement actions such as compliance schedules and consent orders
- Status of current and pending litigation against facility
- Self-monitoring data and reports
- Previous Environmental Protection Agency (EPA), State, or consultant studies and reports
- Previous deficiency notices issued to facility
- Laboratory capabilities and analytical methods used by the facility
- Name(s) of contract laboratories, if applicable
- Previous Discharge Monitoring Report (DMR)—Quality Assurance (QA) files and reports
- Permit Compliance System (PCS) information
- Reports from special studies (e.g., stream monitoring, internal audits) or compliance schedules.

Pollution Control and Treatment Systems

- Description and design data for pollution control system and process operation, if available

- Sources and characterization of discharge
- Type and amount of wastes discharged
- Spill prevention contingency plans, if available
- Available routes for bypasses or diversions, and spill containment facilities
- Pollution control units, treatment methods, and monitoring systems.

Pretreatment Information

- Information concerning compliance schedule to install technologies (industrial facilities) or develop a pretreatment program (Publicly Owned Treatment Works [POTWs])
- Pretreatment reports as required by the National Pollutant Discharge Elimination System (NPDES) permit and the General Pretreatment Regulations, regional, State, or local requirements
- The POTW's enforcement response plan and sewer use ordinance, including local discharge limits
- Information concerning industrial discharges to POTWs, such as:
  - Industrial monitoring and reporting requirements
  - POTW monitoring and inspection program
  - Waste contribution to the POTW
  - Compliance status of industry with pretreatment requirements
  - POTW enforcement initiatives.

Chapter Nine of this manual discusses pretreatment program requirements in greater detail.

Sources of Facility Background Information

Previous Inspections

Previous inspection reports can provide general facility information, as well as problems or concerns noted in previous inspections. Inspectors who have visited the facility for NPDES, pretreatment, or other regulatory programs may also provide information on the facility.

Laws and Regulations

The Clean Water Act (CWA) and related NPDES regulations establish procedures, controls, and other requirements applicable to a facility. In addition, State's may have additional regulations, and sometimes even local ordinances, are applicable to the same facility. Refer to Table 1-2 for a list of applicable NPDES-related Federal statutes and regulations.

Permits and Permit Applications

Permits provide information on the limitations, requirements, and restrictions applicable to discharges; compliance schedules; and monitoring, analytical, and reporting requirements. Permit applications provide technical information on facility size, layout, and location of pollutant sources; treatment and control practices; contingency plans and emergency procedures; and pollutant characterization—types, amounts, applicability of effluent guidelines, and points/ locations of discharge. Permit applications for air, solid, and hazardous waste treatment and disposal permits may provide additional information to the inspector that is not available elsewhere.

Regional and State Files and Personnel

Files or Regional and State personnel often can provide correspondence; facility self-monitoring data; inspection reports, Quarterly Noncompliance Reports (QNCRs), and DMR QA reports; and permits and permit applications applicable to individual facilities. They can provide compliance, enforcement, and litigation history; special exemptions and waivers applied for and granted or denied; citizen complaints and action taken; process operational problems/solutions; pollution problems/solutions; laboratory capabilities or inabilities; and other proposed or historical remedial actions. This information can provide design and operation data, recommendations for process controls, identification of pollutant sources, treatment/control systems improvement, and remedial measures.

Technical Reports, Documents, and References

These information sources provide generic information on waste loads and characterization, industrial process operations, and pertinent specific data on available treatment/control techniques, such as their advantages or disadvantages and limits of application and pollutant removal efficiencies. Such sources include Development Documents for Effluent Standards and Guidelines.

Company Data Sources

Many companies maintain individual web sites that contain valuable information regarding the company's financial status, significant purchases and sales, new business ventures, etc.

Other Statutory Requirements

Facility files maintained by EPA and the State pursuant to other statutes (e.g., Toxic Substances Control Act [TSCA]; Resource Conservation and Recovery Act [RCRA]; Comprehensive Environmental Response, Compensation and Liability Act [CERCLA]; Federal Insecticide, Fungicide and Rodenticide Act [FIFRA]; Clean Air Act [CAA]) may also contain information useful to the NPDES inspection.

Development of an Inspection Plan

Plans are helpful tools for organizing and conducting compliance inspections. A plan is recommended to effectively conduct a compliance inspection. After reviewing the available background information, the inspector prepares a comprehensive plan to define inspection objectives, tasks and procedures, resources required to fulfill the objectives, inspection schedule, and when findings and conclusions on the work will be reported. At least the following items need to be considered:

- Objectives
  - What is the purpose of the inspection?
  - What is to be accomplished?
- Tasks
  - What tasks are to be conducted?
  - What information must be collected?
  - What records will be reviewed?
- Procedures
  - What procedures are to be used?
  - Will the inspection require special procedures?
- Resources
  - What personnel will be required?
  - What equipment will be required?

- Schedule
  - What will be the time requirements and order of inspection activities?
  - What will be the milestones?

- Coordination
  - What coordination with laboratories or other regulatory agencies will be required?

An outline of tentative inspection objectives, meetings to be held, and records that will be reviewed can be prepared and presented to the facility officials during the opening conference.

Notification of the Facility

With regard to the EPA-administered NPDES program, the permittee is sometimes notified by a Section 308 Letter or "308 Letter" that the facility is scheduled for an inspection. (Appendix E is an example of a typical 308 Letter.) The signature authority for a 308 Letter may be delegated to a section chief. The 308 Letter advises the permittee that an inspection is imminent and usually requests information regarding onsite safety regulations to avoid problems concerning safety equipment at the time of inspection. This information may include such items as names, addresses, and updated process information. The 308 Letter may specify the exact date of inspection, if coordination with the permittee is required. The 308 Letter also is used to inform the permittee of the right to assert a claim of confidentiality. EPA conducts both announced and unannounced inspections. Depending upon the specific circumstances the permittee may or may not be notified prior to the inspection in writing or by telephone. Each region uses different criteria to determine whether to announce inspections.

State Notification of Federal Inspection

The inspector must be certain that the appropriate State regulatory agency is notified in a timely manner of inspections to be conducted in its jurisdiction. The State should be notified of all Federal inspections unless disclosing inspection information would jeopardize an unannounced inspection. This responsibility may vary depending on the region.

Preparation of Equipment and Supplies

If sampling is to be performed, part of the pre-inspection process may involve preparing sampling equipment and the development of a Quality Assurance Project Plan (QAPP). The type of equipment may vary according to the facility inspected and the type of inspection. Table 2-1 includes a list of field sampling equipment that may be needed. All equipment must be checked, calibrated, and tested before use. The inspector also must ensure that all materials necessary to complete an inspection are taken to the inspection site. The inspector or

designated person is responsible for maintaining the equipment properly, in accordance with operating instructions.

Safety equipment and procedures required for a facility will be based on the response to the 308 Letter or standard safety procedures. Safety requirements must be met, not only for safety reasons, but to ensure that the inspector is not denied entry to the facility or parts of it. See Table 2-1 for list of protective clothing and safety equipment.

Photocopies of appropriate checklists to be used during the inspection should be obtained during the pre-inspection preparation.

Table 2-1

List of Field Sampling Equipment

Field Equipment	
Documents and Recordkeeping Tools • Credentials • File • Checklists • Log book • Shipping labels • Analysis request forms • Waterproof pen • Calculator • QAPP & Sampling plan	Protective Clothing[1] • Hard hat • Hearing protection • Safety shoes • Gloves • Coveralls • Reflective safety vest • Safety glasses/goggles • Rainwear
Sampling Materials • Automatic samplers • Tubing • Sample containers, including extras • Batteries/extension cords • Sample bottle labels/sample seals • Plastic security tape • Chain-of-custody forms • Dissolved oxygen meters • pH meter • TRC meter • pH buffer • Deionized water • Chart paper • Thermometer • Coolers/ice • Preservatives	Safety Equipment[1] • First-aid kit • Meters (oxygen content, explosivity, and toxic gas) • Safety harness and retrieval system • Ventilation equipment • Respirator • Filter cartridges • Self-contained breathing apparatus (if appropriate)
Sample Transportation Materials • Bubble pack material • Filament tape • Airbill/bill of lading	Tools • Multi-tooled jack knife (Swiss Army type) • Electrical and duct tape • Tape measure • Hand-held range finder and level • Camera/film, digital camera, video camera • Flashlight • Screwdriver • Adjustable wrench and vise grips • Bucket (plastic or stainless steel, as appropriate) • Nylon cord • GPS • Laptop computer • Cell phone
Flow Measurement Devices • Measurement devices (e.g., flumes, weirs, portable ultrasound or bubble systems) • Flow discharge tables • Level • Ruler • Stopwatch or watch with second hand	

[1] List of Protective Clothing and Safety Equipment is not limited to only Sampling Inspections.

This page is intentionally left blank.

2. B. Offsite Surveillance

Considerations

Often many potential concerns can be identified prior to entering the facility, such as illegal discharges, stressed vegetation, spills, smoke, or illegal dumping. Offsite surveillance also provides an opportunity for the inspector to determine the direction North, which can be used to reference photos, locations, violations, etc., and allows the inspector to determine the layout of the facility and make judgements about how to prioritize the inspection.

Specific questions the inspector should answer when conducting offsite surveillance include:

1. Is the offsite surveillance conducted from a public right-of-way?
2. Where is the direction North?
   - A brief sketch of the layout and orientation (as viewed from the public right-of-way) should be noted.
3. What are some obvious concerns visible from public right-of-way (e.g., containers, loading areas, tanks, obvious discharges, improper disposal)?

This page is intentionally left blank.

2. C. Entry

Entry Procedures

Authority

The authority for entry into a wastewater facility is found in section 308(a)(4)(B) of the CWA which states:

> the Administrator or his authorized representative . . . upon presentation of his credentials (i) shall have a right of entry to, upon, or through any premises in which an effluent source is located or in which any records are required to be maintained . . . and (ii) may at reasonable times have access to and copy any records, inspect any monitoring equipment or method . . . and sample any effluents which the owner or operator of such source is required to sample. . . .

In addition, NPDES permits contain inspection authority provisions.

Arrival

Arrival at the facility and the facility inspection should occur during normal working hours. The facility owner or agent in charge should be located as soon as the inspector arrives on the premises. Prior to entering a facility, inspectors should observe it as thoroughly as possible from public grounds.

Credentials

When the proper facility officials have been located, the inspector must introduce himself or herself as an EPA inspector and present the proper EPA credentials. These credentials indicate that the holder is a lawful representative of the regulatory agency and is authorized to perform NPDES inspections. The credentials must be presented whether or not identification is requested.

If the facility officials question the inspector's credentials after the credentials have been reviewed, the officials may telephone the appropriate State or EPA Regional Office for verification of the inspector's identification. Credentials should never leave the sight of the inspector or be photo-copied. For more detailed information on the use of EPA Credentials, please refer to the fact sheet "The Do's and Don'ts of Using EPA Credentials"(Appendix F).

Consent

Consent to inspect the premises must be given by the owner or operator at the time of the inspection. As long as the inspector is allowed to enter, entry is considered voluntary and consensual, unless the inspector is expressly told to leave the premises. Expressed consent is not necessary; absence of an expressed denial constitutes consent.

Reluctance to Give Consent

The receptiveness of facility officials toward inspectors is likely to vary among facilities. Most inspections will proceed without difficulty. In other cases, officials may be reluctant to give entry consent because of misunderstood responsibilities, inconvenience to a firm's schedule, or other reasons that may be overcome by diplomacy and discussion. If consent to enter is denied, the inspector should follow denial of entry procedures (see p.2-13).

Whenever there is a difficulty in gaining consent to enter, inspectors should tactfully probe the reasons and work with officials to overcome the problems. Care should be taken, however, to avoid threats of any kind, inflammatory discussions, or deepening of misunderstandings. If the situation is beyond the authority or ability of the inspector to manage, the inspector's supervisor/ Office of Regional Counsel should be contacted for guidance.

Claims of Confidentiality

The inspector should explain the permittee's right to claim material as confidential and that the inspector may examine areas related to effluent production or storage even if the permittee has asserted claims of confidentiality. Confidential information is discussed in greater detail later in this chapter.

Waivers, Releases, and Sign-In Logs

When the facility provides a blank sign-in sheet, log, or visitor register, it is acceptable for inspectors to sign it. However, EPA employees must not sign any type of "waiver" or "visitor release" that would relieve the facility of responsibility for injury or that would limit the rights of EPA to use data obtained from the facility. The inspector may cross-out and initial any wording that is unacceptable due to its restrictive nature.

If such a waiver or release is presented, the inspectors should politely explain that they cannot sign and request a blank sign-in sheet. If the inspectors are refused entry because they do not sign the release, they should leave and immediately report all pertinent facts to the appropriate supervisor and/or legal staff. All events surrounding the refused entry should be fully documented. Problems should be discussed cordially and professionally.

Problems With Entry or Consent

Because a facility may consider an inspection to be an adversarial proceeding, the legal authority, techniques, and competency of inspectors may be challenged. Facility officials also may display antagonism toward EPA personnel. In all cases, inspectors must cordially explain the authorities and the protocols followed. If explanations are not satisfactory or disagreements cannot be resolved, the inspectors should leave and obtain further direction from his EPA supervisor or legal staff. Professionalism and politeness must prevail at all times. Appendix G contains EPA's Memorandum on Entry Procedures – "Conduct Inspections After the Barlow's Decision."

Entry Procedures

EPA developed the following inspection procedures as a result of the 1978 U.S. Supreme Court decision in Marshall v. Barlow's, Inc.

- Ensure that all credentials and notices are presented properly to the facility owner or agent in charge.
- If entry is not granted, ask why. Ask the reason for the denial to see if obstacles (such as misunderstandings) can be cleared. If resolution is beyond the authority of the inspector, he or she may suggest that the officials seek advice from their attorneys to clarify EPA's inspection authority under Section 308 of the CWA.
- If entry is still denied, the inspector should withdraw from the premises and contact his or her supervisor or Regional Counsel. The supervisor will confer with attorneys to discuss the desirability of obtaining an administrative warrant.
- All observations pertaining to the denial are to be carefully noted in the field notebook and inspection report. Include such information as the facility name and exact address, name and title of person(s) approached, name and title of the person(s) who refused entry, date and time of denial, detailed reasons for denial, facility appearance, and any reasonable suspicions of regulatory violations. All such information will be important should a warrant be sought.

Important Considerations

Under no circumstances should the inspector discuss potential penalties or do anything that may be construed as coercive or threatening.

Inspectors should use discretion and avoid potentially threatening or inflammatory situations. If a threatening confrontation occurs, the inspector should document it and then report it immediately to the supervisor or staff attorney. If feasible, statements from witnesses should be obtained and included in the documentation.

Withdrawal of Consent During Inspection

If the facility representative asks the inspector to leave the premises after the inspection has begun, the inspector should leave as quickly as possible following the procedures discussed previously for denial of entry. All activities and evidence obtained before the withdrawal of consent are valid. The inspector should ensure that all personal and government equipment is removed from the facility.

Denial of Access to Some Areas of the Facility

If, during the course of the inspection, access to some parts of the facility is denied, the inspector should make a notation of the circumstances surrounding the denial of access and of

the portion of the inspection that could not be completed. He or she then should proceed with the rest of the inspection. After leaving the facility, the inspector should contact his or her supervisor or staff attorney at the Regional Office to determine whether a warrant should be obtained to complete the inspection.

Warrants

The inspector may be instructed by EPA attorneys, under certain circumstances, to conduct an inspection under search warrant. A warrant is a judicial authorization for appropriate persons to enter specifically described locations to inspect specific functions. A pre-inspection warrant possibly could be obtained where there is reason to believe that entry will be denied when the inspector arrives at the facility or when the inspector anticipates violations that could be hidden during the time required to obtain a search warrant. This would be done only in unusual circumstances.

2. D. Opening Conference

Once credentials have been presented and legal entry has been established, the inspector can proceed to outline inspection plans with facility officials. At the opening conference, the inspector provides names of the inspectors, the purpose of the inspection, authorities under which the inspection is being conducted, and procedures to be followed. EPA encourages cooperation between the inspectors and the facility officials in order to facilitate assignments and ensure the success of the inspection.

Considerations

Inspection Objectives

An outline of inspection objectives will inform facility officials of the purpose and scope of the inspection and may help avoid misunderstandings.

Order of Inspection

A discussion of the order in which the inspection will be conducted will help eliminate wasted time by allowing officials time to make records available and start up intermittent operations.

Meeting Schedules

A schedule of meetings with key personnel will allow facility officials adequate time to spend with the inspector.

List of Records

A list of facility records that will need to be reviewed as part of the inspection should be provided to facility officials. (i.e., permit, discharge monitoring report, chain-of-custody form, sampling data, operation and maintenance records, training records, lab data sheets, and other records can be requested depending on the inspections type being performed.) This will allow the officials adequate time to gather the records and make them available for the inspector.

Accompaniment

It is important that a facility official accompany the inspector during the inspection not only to answer questions and describe the plant and its principal operating characteristics, but also for safety and liability considerations. Discussion of such needs with facility officials will provide them the opportunity to allocate personnel for this purpose. It is also advisable that the inspector talk to the personnel actually responsible for performing sample collection and analysis to gather specific information on these procedures.

Permit Verification

The inspector should verify pertinent information included in the permit, such as facility name and address, receiving waters, and discharge points. The inspector should also validate (or obtain) accurate outfall locational data (i.e., the precise latitude and longitude of each outfall).

Safety Requirements

Inspector should be prepared with the appropriate safety equipment which may include hard hat, safety shoes, safety glasses, etc.) The inspector should reaffirm which Occupational Safety and Health Administration (OSHA) and facility safety regulations will be involved in the inspection and should determine whether his safety equipment is adequate.

Closing Conference

A post-inspection meeting should be scheduled with appropriate officials to provide a final opportunity to gather information, answer questions, present findings and deficiencies, and complete administrative duties.

New Requirements

The inspector should discuss and answer questions pertaining to any new rules and regulations that might affect the facility. If the inspector is aware of proposed rules that might affect the facility, he or she may wish to encourage facility officials to obtain a copy.

Split Samples

Facility officials should be informed during the opening conference of their right to receive a split or duplicate of any physical sample collected for laboratory analysis if sufficient sample volume is collected. Officials should indicate at this point their desire to receive split and duplicate samples so that arrangements can be made to secure the samples during inspection. Duplicate samples will be collected at all sites suspected of potential violations and offered to the permittee.

Photography

Photography is an essential tool used to assist the inspector in preparing a thorough and accurate inspection report, to present evidence in enforcement proceedings, and to document conditions found at a site. The Federal Water Pollution Control Act (FWPCA) gives the inspector the authority to collect and copy records including photographic images during an inspection. During special circumstances such as Confidential Business Information (CBI) claims, the inspector may take the photographs, but he/she must handle the photographs following all CBI procedures. If there are other circumstances such as national security issues, the inspector should try to collect the evidence needed without taking photographs. The inspector must inform the site representative that he or she will be taking photographs as a routine part of their inspection.

If the facility representative expresses reservations about allowing the inspector to take photographs, these concerns should be discussed to seek a mutually acceptable solution. This can be as simple as agreeing to avoid photographing sensitive items which are irrelevant to the inspection, and/or allowing the representative to look through the camera's viewfinder prior to taking the photograph. With digital and video photography it is possible to immediately show the representative your image with the option to delete it if deemed unacceptable. As a general rule, it is considered a denial of entry when a facility imposes any photographic restrictions which limit the inspector from properly performing the inspection.

Under no circumstances should the inspector discuss potential penalties or do anything that may be construed as coercive or threatening. If the inspector is unable to reach an acceptable solution, then he or she should withdraw from the premises and immediately contact his or her supervisor for assistance.

If entry is denied, it is legal for the inspector to photograph areas of the facility exposed to public view.

This page intentionally left blank.

2. E. Documentation

Providing documentary support of discrepancies discovered in an inspection is an inspector's basic responsibility. Documentation serves to "freeze" the actual conditions existing at the time of inspection so that evidence can be examined objectively by compliance personnel.

Documentation is a general term referring to all printed information and mechanical media produced, copied, or taken by an inspector to provide evidence of suspected violations. Forms of documentation include the field notebook, statements, photographs, videotapes, drawings, maps, printed matter, mechanical recordings, and copies of records.

Inspector's Field Notebook

The core of all documentation relating to an inspection is the field notebook, which provides accurate and inclusive documentation of all inspection activities. A bound notebook should be used, and entries should be made in permanent ink. The notebook will form the basis for written reports and should contain only facts and pertinent observations.

Note the date and time of arrivals and departures each day. Language should be objective, factual, and free of personal feelings or terminology that might prove inappropriate. Cross out and initial any errors in the notebook. The field notebook should never leave the inspector's possession during the inspection. Do not allow a facility to copy the field notebook. Notebooks become an important part of the evidence package and are admissible in court. The field notebook is a part of government records and is not to be considered the inspector's personal record. Hold notebooks indefinitely pending disposition instructions. There have been instances, although not frequent, where an inspector needed to look back at their field note some 10 to 20 years later for related enforcement work.

Inspection Notes

An inspector may need to testify in an enforcement proceeding. Therefore, it is imperative that each inspector keep detailed records of inspections, investigations, samples collected, and related inspection functions. Types of information that should be entered into the field notebook include the following:

Observations

Record all conditions, practices, and other observations that will be useful in preparing the inspection report or that will validate evidence. Note weather conditions such as rain/snowfall events prior to and during the inspection. These data will assist the inspector in determining whether inflow/infiltration (I&I) is a problem with the facility.

Documents and Photographs

Photographs taken during an inspection are used to supplement the testimony of the inspector as a witness during a court proceeding. The photographs are not intended to refute testimony but rather to aid the witness in recalling actual conditions onsite. All documents taken or prepared by the inspector such as the completed checklists for the inspection report should be noted and related to specific inspection activities. The inspector should adequately document each photograph so that its content can be properly identified with the site, date, and who took the photograph. This can be recorded in the inspector's field notebook or a separate photo log. Some cameras have a photo specific data which allow this information to be permanently imprinted on the photograph. Video cameras and some digital cameras allow this information to be voice recorded with the photograph. All the statements in this section, regarding digital camera use, should be checked with the EPA's Policy on the Use of Digital Cameras for Inspections (Appendix H).

Unusual Conditions and Problems

Note describe in detail unusual conditions and problems.

General Information

List names and titles of facility personnel and the activities they perform should be listed along with statements they have made and other general information. Record weather conditions. Information about a facility's recordkeeping procedures may also be useful in later inspections.

Samples

For the analysis of a sample to be admissible as evidence, a logical and documented connection must be shown between samples taken and analytical results reported. This connection is shown by using a chain-of-custody form that identifies and accompanies a sample between the time it is collected and the time it is analyzed. Sampling techniques and procedures are discussed in Chapter Five, "Sampling."

Statements

Inspectors may attempt to obtain a formal statement from a person who has personal, firsthand knowledge of facts pertinent to a potential violation. Request the person making the statement to sign and date the statement or a certification that the document reflects an accurate summary of what they said.

The principal objective of obtaining a statement is to record in writing, clearly and concisely, relevant factual information.

Procedures and Considerations

- Determine the need for a statement. Will it provide useful information? Is the person making the statement qualified to do so by personal knowledge?
- Ascertain all the facts. Make sure all information is factual and firsthand. Record statements that are relevant and that the person can verify in court. Avoid taking statements that cannot be personally verified.
- In preparing a statement, use simple narrative style; avoid stilted language.
  - Narrate the facts in the words of the person making the statement.
  - Use the first-person singular ("I am manager of . . .").
  - Present the facts in chronological order (unless the situation calls for another arrangement).
- Positively identify the person making the statement (name, address, position).
- Show why the person is qualified to make the statement.
- Present the pertinent facts.
- Have the person read the statement and make any necessary corrections before signing. If necessary, read the statement to the person in the presence of a witness.
  - All mistakes that are corrected must be initialed by the person making the statement.
- Ask the person making the statement to write a brief concluding paragraph indicating that he or she read and understood the statement. This safeguard will counter a later claim that the person did not know what he or she was signing.
- Have the person making the statement sign it.
- If he or she refuses to sign the statement, elicit an acknowledgment that it is true and correct. Ask for a statement in his or her own hand ("I have read this statement and it is true, but I am not signing it because . . ."). Failing that, declare at the bottom of the statement that the facts were recorded as revealed and that the person read the statement and avowed it to be true. Attempt to have any witness to the statement sign the statement including the witness' name and address.
- Provide a copy of the statement to the signer if requested.

Photographs

The documentary value of photographs ranks high as admissible evidence. Clear photographs of relevant subjects provide an objective record of conditions at the time of inspection. If

possible, keep "sensitive" operations out of the photographed background. Photographs showing confidential operations or information must be handled as confidential information.

When a situation dictates the use of photographs, the inspector should obtain the permittee's approval before taking them. The inspector should be tactful in handling any concerns or objections a permittee may have about the use of a camera. In some cases, the inspector may explain to the permittee's representative that wastestreams, receiving waters, and wastewater treatment facilities are public information, not trade secrets. In the event the permittee's representative still refuses to allow photographs, and the inspector believes the photographs will have a substantial impact on future enforcement proceedings, the inspector supervisor or Regional attorneys should be consulted for further instructions.

The primary objective of inspection photography is to create an image which accurately documents their observations and can be used to testify that the image is a “true and accurate representation of what he or she saw on that date.” To accomplish this goal, the inspector needs to be familiar with their camera so that the image not only is captured but is properly exposed and in-focus.

There are myriad choices of cameras and image recording media to pick from. The highest quality photographs are typically from 35mm single-lens reflex cameras, but most non bottom-of-the-line point-and-shoot range finder type cameras produce acceptable images. Disposable film cameras and instant print (e.g., Polaroid) may give poorer quality images but may be used photo is representative of what the inspector saw. Color film is the standard type of film used, but there may be situations where slide film is preferred. Good quality prints can also be made from slide film.

Digital cameras offer the advantage of immediate viewing of the image to assure proper composition and exposure. As mentioned above, they can also be shown to the facility representative to mitigate their photographic concerns. Digital photography presents unique issues which are addressed in the EPA’s Policy on the Use of Digital Cameras for inspections (See Appendix H).

Equipment

A single-lens reflex camera will take high-quality photographs, enable the inspector to use a variety of film speeds, and allow the use of appropriate lenses. Fully automatic 35-mm and pocket cameras can also be used for routine inspections to record the conditions of the facility during the inspection.

All photographs should be made with color print film because additional equipment, such as a projector and screen, is not needed to review them. Also, the negatives from color print film are easily duplicated and the prints can be enlarged and distributed as needed.

A digital camera may be used in conjunction with or instead of a single-lens reflex camera. Digital images require no processing or printing. Digital photographers have the advantage of reviewing images immediately and verifying the results, and if the digital images are not satisfactory, new images may be taken without the substantial delay entailed in processing and printing of traditional photographic images.
When final the digital camera policy will be located at the US EPA’s Office of Compliance Inspector web site: http://intranet.epa.gov/oeca/oc/campd/inspector/index.html

Scale, Location, and Direction Depending on the situation, there are normally three types of photographs which can be taken: 1) the establishing shot, 2) the subject, and 3) the detail shot. The “establishing shot” or wide angle shot is a photograph taken from a distance which shows the subject in relation to permanent landmarks that can be used for reference in establishing the location of the subject. The “subject” shot emphasizes a specific object or event. The “detail” shot or close-up is typically a particular area of interest within the subject, such as a nameplate or leaky valve. It may be helpful to include an object of known size for scale reference such as a notebook or pen.

Safety

In areas where there is a danger of explosion, flash photographs should not be taken. If there is a danger of electrical shock, photographs should be taken from a distance known to be safe.

Videotapes

For some inspections, video cameras can be more effective in documenting your findings. Video cameras not only can document motion relative to a violation, but record sound, have extreme zoom capabilities, and can operate in very low light conditions. When recording sound, inspectors must be aware that all comments are recorded.

Drawings and Maps

Schematic drawings, maps, charts, and other graphic records can be useful in supporting violation documentation. They can provide graphic clarification of site location relative to the overall facility, relative height and size of objects, and other information which, in combination with samples, photographs, and other documentation, can produce an accurate, complete evidence package.

Drawings and maps should be simple and free of extraneous details. Include basic measurements and compass points to provide a scale for interpretation. Identify drawings and maps by source, inspector's initials, and date.

Printed Matter

Brochures, literature, labels, and other printed matter may provide important information regarding a facility's conditions and operations.

Collect these materials as documentation if, they are relevant. Identify all printed matter with date, inspector's initials, and origin.

Mechanical Recordings

Properly date and sign printouts of electronic records so they can be entered as evidence. Charts, graphs, and other hard copy documents produced from computer output should be treated as documentation and handled accordingly.

Copies of Records

The inspector may store records in a variety of information retrieval systems, including written or printed materials, computer or electronic systems, or visual systems such as microfilm and microfiche.

Obtaining Copies of Necessary Records

When copies of records are necessary for an inspection report consider, storage and retrieval methods.

Written or printed records generally can be photocopied onsite. Portable photocopy machines may be available to inspectors through the Regional Office. When necessary, inspectors should get authorized in advance via procurement request, travel authorization, or phone call to the appropriate EPA authority. Each inspector should find who is their approval official. Authorization will allow the inspector to pay a facility a "reasonable" price for use of copying equipment. If the facility does not have a photocopier and a portable photocopier is not available, a photocopy machine is usually accessible at a nearby site (e.g., post office, convenience store). However, inspectors must obtain permission from the permittee prior to taking records offsite for copying.

- At a minimum, all copies made for or by the inspector should be initialed and dated for identification purposes. (See identification details below.)

- When photocopying is impossible or impractical, closeup photographs or videotape or hand copying may be taken to provide suitable copies.

• Computer or electronic records may require the generation of hard copies for inspection purposes. Arrangements should be made during the opening conference, if possible, for these copies.

- Photographs of computer screens may provide adequate copies of records if other means do not exist.

• Visual systems (microfilm, microfiche) may have photocopying capacity built into the viewing machine, which can be used to generate copies. Photographs of the viewing screen may provide adequate copies if hard copies cannot be generated.

Identification Procedures Immediate and adequate identification of records reviewed is essential to ensure the identification of records throughout the EPA custody process and their

admissibility in court. When inspectors are called to testify, they must be able to identify each particular document and state its source and the reason for its collection if asked.

The inspector should initial, date, number, and enter the facility's name on each record, and log these items into the field notebook.

Initialing/Dating

Each inspector should develop a unique system for initialing (or coding) and dating records and copies of records so that he or she can easily verify their validity. This can be done by initialing each document in a similar position, or by another method, at the time of collection. All record identification notations should be made on the back of the document. The inspector must be able to identify positively that he or she so marked the document.

Numbering

As necessary to keep proper track each document or set of documents substantiating a suspected violation(s) should be assigned an identifying number unique to that document. The number should be recorded on each document and in the field notebook.

Logging

Documents obtained during the inspection should be entered in the field notebook by a logging or coding system. The system should include the identifying number, date, and other relevant information:

- The reason for copying the material (i.e., the nature of the suspected violation or discrepancy)
- The source of the record (i.e., type of file, individual who supplied record)
- The manner of collection (i.e., photocopy, other arrangements).

General Considerations

- Return originals to the proper person or to their correct location.
- Group related records together.
- Handle Confidential business records according to the special confidential provisions discussed below.

Routine Records

The inspector may find it convenient to make copies of records, such as laboratory analysis sheets and data summaries, to refresh his or her memory when preparing the inspection report. It is not always necessary to follow the formal identification and logging requirements when such records are obtained for general information purposes or to aid in the preparation of routine inspection reports.

Confidential Information

Confidentiality

When conducting compliance inspections, an inspector may have to deal with claims of confidentiality as authorized under Section 308 of the CWA and as defined under 40 CFR Part 2. This section of the statute is designed to protect confidential business information from unauthorized disclosure. Confidential business information includes information considered to be trade secrets (including chemical identity, processes, or formulation) that could damage a company's competitive position if they became publically known.

Any business being inspected has the right to claim all or any part of the information gathered during that inspection, other than effluent data, as confidential. See CWA section 308(b); 40 C.F.R. § 2.302(e). In fact, as a mater of policy, EPA notifies the business of its right to assert a claim of confidentiality at the time of 308 letter Frequently, the 308 letter is used for this notification. After the business has responded to the 308 letter and, in that response, has asserted whatever claims of business confidentiality for eligible information it intends to make, EPA generally will be aware of any potential confidentiality problems.

The affected business may assert a claim of confidentiality at any time, according to 40 CFR 2.203(c). The business can make such a claim at the time of the inspection or at any time subsequent to the inspection. This claim must be in writing and signed by a responsible company official. While the business is entitled to make a claim of confidentiality on all information which an inspector requests or has access to while onsite (other than effluent data), claims of confidentiality are subject to review by the EPA's Office of General Counsel or Office of Regional Counsel and the business may be asked to substantiate its claims. See 40 C.F.R. § 2.204(e). If a claim of confidentiality for certain information is received by EPA after the information itself is received by EPA, EPA will make such efforts as are administratively practicable to associate the late claim with copies of the previously submitted information in EPA's files. See 40 C.F.R. § 2.203(c). However, EPA cannot assure that such efforts will be effective, in light of the possibility of prior disclosure or widespread prior dissemination of the information.

When a business makes the confidentiality claim, the Regional office normally will not determine the validity of that claim under 40 CFR Part 2 until there is a request for the information from a third party or if EPA believes that the information should be included in the public record in connection with a proceeding. The exact procedures for making and handling CBI determinations are contained in 40 CFR Part 2. Until such a time as that determination is made, the information shall be treated as confidential information.

In some cases, entry to a facility may be denied based on the claim by a permittee that there is confidential information at the facility. In such cases, the inspector should recite the relevant subsections of 308 so they are clearly understood by all parties involved. The inspector should then explain the provisions of 40 CFR Part 2 concerning confidentiality. For example, the inspector could suggest that the protected material or process be segregated from other disclosable information or processes. The inspector should also have in his/her possession a copy of both the 308 letter which was sent to the business and the business' response. If the facility representative still refuses entry, the inspector should not contest the issue but should treat the matter in the same manner as any denial of entry and immediately notify the appropriate EPA enforcement office for instructions.

Types of Information Excluded from Confidential Treatment

In order to understand claims of confidentiality, an inspector should know the types of information considered confidential. These types of information are defined in 40 CFR Part 2. The regulations specifically exclude certain types of information from confidential treatment. In particular, this "public information" includes the NPDES permit application and all "effluent data" as defined in 40 CFR 2.302(a)(2)(i). According to this definition, effluent data include all information necessary to determine the identity, amount, frequency, concentration, temperature, and other characteristics (to the extent related to water quality) of:

- Any pollutant which has been discharged by the source (or any pollutant resulting from any discharge from the source) or any combination of the foregoing

- The pollutant which, under an applicable standard or limitation, the source was authorized to discharge (including, to the extent necessary for such purpose, a description of the manner or rate of operation of the source).

Effluent data may also include a general description of the location and/or nature of the source to the extent necessary to distinguish it from other sources (e.g., a description of the device, installation, or operation constituting the source). For additional clarification about confidentiality, EPA Regional policy on the issue should be consulted.

Secrecy Agreements and Nondisclosure

Inspectors, whether EPA, the State, or EPA contractors conducting NPDES compliance inspections, shall not sign any pledge of secrecy or confidentiality agreements or any agreement which would limit the Agency*s ability to disclose information received while inspecting a facility. Section 308 does not specify that a secrecy agreement must be executed as a condition of entry. Unauthorized disclosure of confidential information by EPA or State employees and authorized contractors is prohibited by law [33 U.S.C. 1318(b)]. In addition, all contractor inspectors must sign a statement that they will be personally bound by 40 CFR Part 2 and not disclose trade secrets.

It is not appropriate for the compliance inspector to determine whether a permittee's claim of confidentiality is justified. Once such a claim is made, the information must not be disclosed and must be kept confidential until a determination is made by the appropriate EPA legal office. EPA employees who violate these requirements may be subject to dismissal,

suspension, or fines. Criminal action may be taken against EPA employees and authorized contractors who disclose confidential business information.

Trade Secrets and Confidential Business Information Section 308(b)(2) of the CWA in Title 40, *Code of Federal Regulations*, Part 2 (40 *CFR* Part 2) protects and defines trade secrets and confidential business information from public disclosure.

Section 308(a)(4) of the CWA states that an inspector may sample an effluent, request information, have access to the location of the effluent, and inspect any monitoring equipment. The information that is collected is available to the public. If a permittee does not want inspection information to be available to the public, he or she must request that EPA consider the information confidential. Confidential information includes trade secrets, such as chemical identity, processes, or formulae. The permittee must show that the information, if made available, would divulge trade secrets. The information then may be classified confidential, but still may be disclosed to authorized representatives of EPA.

Therefore, a business is entitled to a claim of confidentiality for all information that an inspector requests or has access to; however, a business may not refuse to release information requested by the inspector under the authority of Section 308 of the Act on the grounds that the information is considered confidential or a trade secret. The claim of confidentiality relates only to the public availability of such data and cannot be used to deny facility access to inspectors performing duties under Section 308 of the Act. A claim of confidentiality may be made at the time of the inspection or at any time subsequent to the inspection. Claims must be made in writing and signed by a responsible company official. Information claimed as confidential can be later reviewed to determine whether the claim is valid.

Handling Confidential Business Information

Routine security measures will help ensure that reasonable precautions are taken to prevent unauthorized persons from viewing confidential information. When practical circumstances prohibit the inspector from following the procedures exactly, he or she should take steps to protect the information. He or she should mark all confidential information received as such and placed in a locked filing cabinet or a safe immediately after the inspection is completed. Maintain a chain-of-custody record for all confidential information. Since confidential information requires special handling procedures, it may be useful to keep it in a separate notebook in a secure/locked location. By doing this, only the confidential material, and not the entire notebook of inspection findings, would have to be kept in a locked filing cabinet.

While Traveling. The inspector may be on the road for several days while conducting inspections. The inspector is responsible for ensuring that the information collected is handled securely.

- Documents and field notes are considered secure if they are in the physical possession of the inspector and are not visible to others while in use.

- Keep inspection documents which contain sensitive information in a locked briefcase. If it is impractical to carry the briefcase store the briefcase in a locked area, such as the trunk of a motor vehicle.

- Place physical samples in locked containers and store in a locked portion of a motor vehicle. The chain-of-custody procedures provide further protection for ensuring the integrity of the sample.

In the Office. Indicate who is authorized to have access, only personnel authorized by the Regional Administrator, Division Director, or Branch Chief. An access log should be maintained for all transactions. Do not copy information marked "trade secret" and/or "confidential" unless there is written authority from the Regional Administrator, Division Director, or Branch Chief. Requests for access to confidential information by any member of the public, or by an employee of a Federal, State, or local agency, must be handled according to the procedures contained in the Freedom of Information Act regulations (40 *CFR* Part 2). All such requests should be referred to the responsible Regional organizational unit.

This page intentionally left blank.

2. F. Closing Conference

To achieve the most effective results from compliance inspections, the inspector should communicate results promptly to the facility management and/or operating personnel. The inspector should limit the discussion to preliminary findings of inspection. If appropriate, the inspector may compare findings with the permittee's NPDES permit requirements, consent decrees, administrative orders, and other enforcement actions.

Facility officials are usually anxious to discuss the findings of an inspection before the inspector(s) leave. Inspectors should hold a closing meeting or conference for the presentation and discussion of preliminary inspection findings. The closing conference provides an opportunity to describe deficiencies found and identify areas of concern (e.g., unpermitted discharge, parts of a SWPPP missing; inspections not being done; silt fence not installed; discharge to a storm drain, etc...). During this meeting or conference, inspectors can answer final questions, prepare necessary receipts, provide information about the NPDES program, and request the compilation of data that were not available at the time of the inspection. It also presents an opportunity to deliver compliance assistance materials and/or information in accordance with the National Policy on the Role of the EPA Inspector in Providing Compliance Assistance During Inspections, June, 2003. Inspectors should be prepared to discuss follow-up procedures, such as how results of the inspection will be used and what further communications the region, state, tribe, or locality may have with the facility. Inspectors should conduct closing conferences in accordance with any applicable guidelines or SOPs established by the EPA Regional Administrator, State Commissioner, Tribal Official or Local Director.

Precautions and Guidelines

Although a discussion of the inspection results is important, certain precautions are essential:

- The inspector should follow the guidelines described in the National Policy on the Role of the EPA Inspector in Providing Compliance Assistance During Inspections, June, 2003.

These guidelines are subject to standard operating procedures developed by the Administrator/delegated party or State Director regarding permittee contacts in the Region/State.

Deficiency Notice

The inspector may issue a Deficiency Notice that specifies existing or potential problems in a permittee's self-monitoring program. Issuing a Deficiency Notice onsite or after the site inspection provides a swift and simple method for improving the quality of data from NPDES self-monitoring activities. An example Deficiency Notice and EPA's Memorandum on Deficiency Notice Guidance are provided in Appendix I. Notices allow the inspector to formally assign responsibility to the permittee and to track each step of the compliance/enforcement process. The Deficiency Notice also helps the permittee to comply with the self-monitoring requirements of the permit.

This tool should be used in conjunction with any type of NPDES compliance inspection during which the inspector identifies problems with the permittee's self-monitoring activities. It is to be used by the inspector only to alert permittees to deficiencies in their self-monitoring activities. The enforcement office of the regulatory authority, not the inspector, handles effluent violations.

Inspectors can issue the Deficiency Notice to a permittee immediately following a compliance inspection, or after the site visit is completed, if they discover any permit deficiencies in the following seven categories that the Notice addresses:

- Monitoring location
- Flow measurement
- Sample collection/holding time
- Sample preservation
- Test procedures, Section 304(h), 40 *CFR* Part 136
- Recordkeeping
- Other self-monitoring deficiencies.

2. G. Inspection Report

The adequacy of compliance follow-up to correct problems or deficiencies noted during the inspection greatly depends on the report prepared by the inspector. The sections of this chapter detail procedures for collecting and substantiating the information used to prepare this report. Once collected, however, the inspector should organize and arrange the material so that compliance personnel can make maximum use of the evidence or inspection information. The information presented in this section provides general guidelines for organizing evidence and preparing an inspection report.

Objective of the NPDES Inspection Report

The objective of a NPDES inspection report is to organize and coordinate all inspection information and evidence into a comprehensive, usable document. To meet this objective, information in an inspection report must be presented in a clear, well-organized manner. The information should be objective and factual; the report must not speculate on the ultimate result of the inspection findings. Of particular importance are the following:

- Include only accurate information in the report. It should be factual and based on sound inspection practices. Observations should be the verifiable result of firsthand knowledge. Compliance personnel must be able to depend on the accuracy of all information.

- Information in an inspection report should be relevant to the subject of the report. Irrelevant facts and data will clutter a report and may reduce its clarity and usefulness. Avoid personal comments and opinions.

- Substantiated suspected violation(s) be by as much factual, relevant information as is feasible to gather. Organize all information pertinent to the subject into a complete package. Reference documentary support (e.g., photographs, statements, sample documentation) accompanying the report should be referenced clearly so that anyone reading the report will get a complete, clear overview of the situation. The more comprehensive the evidence is, the better and easier to determine compliance or noncompliance.

Effectively Communicate and Document an Alleged Violation in the Inspection Report

This is especially critical when the findings and observations support that a potential violation occurred. The following includes procedures and examples of how to effectively communicate potential violations.

1. First, state the requirement in the actual language of the statute, permit, or regulation and then describe and present the evidence that shows how the facility failed to meet the requirement. Each potential violation should be made obvious to the reader by thoroughly and clearly describing all documents, photographs, statements, and other evidence in the inspection report. This should include the inspector's own observations. For example:

I. ***Failure to Meet Missouri State Operating Permit (MSOP) Conditions -*** *The Missouri MSOP, MO0023456, issued to the City of Pollutionville, at Section C. Special Conditions, Subsection 6. General Criteria, contains the following requirement: "a) Waters shall be free from substances in sufficient amounts to cause formation of putrescent, unsightly or harmful bottom deposits or prevent full maintenance of beneficial uses." On January 5, 2002, at the WWTP's outfall 32 (see map - attachments 3), I observed the receiving water body, Greenfoot Stream, to have approximately 4-5 inches of sludge deposit on the bottom 9 (see photos #10-14, approximation of depth made with 12" ruler) as well as significant blood worm populations (photos #15-16, estimate of blood worm population based on counting the number of blood worms per square foot of water surface to a depth of about one foot). Greenfoot Stream is on the Missouri 303(d) list for nutrient content. Mr. Smith, the plant operator, signed a statement that the plant had been losing solids to the stream for four months due to an increased organic load from Acme Meat Packing Co. (see attachment 5)....*

II. ***NOV #4 - Failure to Close Hazardous Waste Satellite Accumulation Container -*** *While in the aerosol fill area (see map - attachment 3), I observed one full 55-gallon satellite accumulation container that was open (photo 1). I verified that the drum was full by looking inside of it. Mr. Helpful, the Aerosol Can Fill Operator, said that he used the container to collect spent line flushing solvent. He said the solvent consisted of Mecos laquer thinner and that the thinner was used to wash the paint out of the fill equipment (MSDS - attachment 9). I asked Mr. Helpful if he considered the spent laquer thinner a hazardous waste. He said yes, that he managed it as F003/F005 hazardous waste. Containers holding hazardous waste are required to be closed per 40 CFR 262.34(a)(1(I) ref. 40 CFR 265.173(a).*

2. Use a separate, indented paragraph to highlight each violation along with an obvious font change. As in the above example, each violation was in **bold face type** and *italicized*. Other formats may be used as long as each violation is made clearly obvious to the reader.

3. The inspector should write the report as soon as possible after returning from the field. As noted earlier, excessive delays or reports not written "near-in-time" to the inspection can seriously compromise EPA's ability to conduct timely enforcement.

Each inspector should use the following techniques to ensure a well-documented inspection report:

1. Write the report as soon as possible upon return from the field.
2. Write the report in the first person and in a "compare and contrast" style, i.e., each violation identified should be stated in a manner where the facts are presented and then compared, against the statute, permit or regulatory requirement.
3. Use simple, direct language, and short sentences.
4. Identify, by name and relationship to the facility, who said what and when.
5. Clearly identify all potential violations observed during the inspection or evaluated prior to the report write-up.
6. Reference the applicable statute, permit, or regulation for each potential violation identified. If the inspection is conducted in a state that is authorized to implement the regulation, then the applicable state law or regulation should be co-referenced.

7. Provide a complete and detailed description of all materials gathered to support the alleged violation, e.g., all photographs, maps, diagrams, etc.
8. Identify, number, and reference all attachments in the text of the field report.
9. Use consistent word choice, e.g., if a particular device is called a "Waste-o-matic," use the term "Waste-o-Matic" throughout the report to describe that particular device.
10. Do not use negative inferences. For example, avoid saying "...the only drums found were...," which is not first person and implies that no other drums were at the facility. Simply state what was observed, e.g., "During the inspection, I observed five drums which were..."
11. Do not use vague and ambiguous terms or statements. For example, avoid using words like *indicated, implied, suggested, several, many, some,* or *it was determined*.
12. Do not use absolute terms like *all, always,* or *every,* unless the findings and observations have been fully verified and documented (be as precise and accurate as possible.
13. Do not repeat or use information obtained from previous inspection reports that was not verified during the inspection.
14. Describe all actions (including time frames) that the facility said they would complete as a result of the inspection.

Elements of a Report

Although specific information requirements for an inspection report will vary, most reports will contain the same basic elements:

- NPDES Compliance Inspection Report Form
- Supplementary narrative information
- Copies of completed checklists
- Documentary support
- Inspection Conclusion Data Sheet

NPDES Compliance Inspection Report Form

The inspector is responsible for reporting all compliance inspection activities by completing the current NPDES Compliance Inspection Report Form 3560-3 as soon as possible after the inspection. A copy of the form is included as Appendix J. The EPA should forward the inspection report form (Form 3560-3) to the regulatory authority no later than 30 days after completion of the inspection. Copies should be sent to the permittee in a timely manner (generally within 30 days of inspection date) except when formal enforcement procedures are underway. In this instance, the case attorney will direct any disclosure of data.

Supplementary Narrative Information

Supplementary narrative information could be a memorandum in the case of routine inspections or a narrative report when major violations are detected. When a narrative report is necessary to fully describe a compliance inspection, the contents of the report should focus on supporting or explaining the information provided in the Compliance Inspection Report Form.

The narrative report should be a concise, factual summary of observations and activities, organized logically and legibly, and supported by specific references to accompanying documentary support.

A work plan will simplify preparation and will help ensure that information is organized in a usable form. Basic steps in writing the narrative report include the following:

Reviewing the Information

The first step in preparing the narrative is to collect all information gathered during the inspection. Review the inspector's field notebook in detail. Review all evidence for relevance and completeness. A telephone call or, in unusual circumstances, a follow-up visit may be needed to obtain additional or supplementary information. Record any phone call relating to the inspection in the inspector's log book with date and time.

Organizing the Material

Organize the information according to need, present it logically and comprehensively. Organize the narrative so that it is easily understood.

Referencing Accompanying Material

Reference all documentary support accompanying a narrative report clearly so that the reader will be able to easily locate the items. The "Documentation" section in this chapter provides details on document identification. The inspector should check all documentary support for clarity before writing the report.

Writing the Narrative Report.

Once all the material is collected the reviewing, organizing, and referencing, the narrative can be written. The purpose of the narrative is to factually record the procedures used in, and findings resulting from, the evidence-gathering process. The inspector should refer to routine procedures and practices used during the inspection, but should detail facts relating to potential violations and discrepancies. The field notebook is a guide for preparing the narrative report.

If the inspector has followed the steps presented in this manual, the report will develop logically from the organizational framework of the inspection. In preparing the narrative, the inspector should make simplicity paramount.

- Write simply; avoid stilted language.
- Use the active, not passive, voice: (e.g., "He said that . . ." rather than "It was said that...").
- Keep paragraphs brief and to the point.
- Avoid repetition.

- Proofread the narrative carefully.

Copies of Completed Checklists

Refer to comprehensive checklists in the technical chapters of this manual and in the appendices. When appropriate use these checklists to collect information during the inspection, the Region may modify these to specific concerns. Include copies of all completed checklists in the inspection report.

Documentary Support

Include all documentation produced or collected by the inspector to provide evidence of suspected violations in the inspection report. The "Documentation" section in this chapter provides details on obtaining and organizing this material.

The Permit Compliance System (PCS)/Integrated Compliance Information System (ICIS)

The inspection office should ensure that all data listed in Section A of the NPDES Compliance Inspection Report Form 3560-3 are entered into the PCS, which is used for national tracking of NPDES permit information. EPA does not credit the inspection until it is coded/entered into PCS. Therefore, timely completion of reports and data entry into PCS is essential to effectively follow up a compliance inspection. Make every effort to ensure that data are entered no later than 30 days after the inspection is completed.

Inspection Conclusion Data Sheet (ICDS)

In FY 2002, EPA began collecting information on EPA NPDES compliance inspection outcomes using a manual ICDS form. Regional inspectors completed these forms and sent to Headquarters. The information on the forms was then entered into a national ICDS database. In FY 2003, Office of Enforcement and Compliance Assurance (OECA) launched the Integrated Compliance Information System (ICIS) Phase I to electronically capture compliance and enforcement information, including ICDS data. ICIS Phase I includes data fields for entering both general inspection information (for example, facility name, address, SIC code, media) and ICDS information (for example, deficiencies, actions taken, and compliance assistance provided). Appendix BB contains the Compliance Monitoring Screens required and directions to follow to enter both types of information. Regions must decide whether EPA inspectors or central data entry personnel will be responsible for entering the data into ICIS. If EPA inspectors enter the data, no manual ICDS form will be needed since the information to fill out the form should be included in the inspector's notes. If central data entry personnel enter the data, EPA inspectors will have to complete the manual ICDS form and forward it to their first-line supervisor for review prior to data entry into ICIS.

Integrated Compliance Information System (ICIS)

The Integrated Compliance Information System (ICIS) supports the information needs of the National Enforcement and Compliance program as well as the unique needs of the NPDES program. ICIS will integrate data that is currently located in more than a dozen separate data systems. The web-based system will eventually enable individuals from states, communities, facilities, and EPA to access integrated enforcement and compliance data from any desktop connected to the Internet. EPA's ability to target the most critical environmental problems will improve as the system integrates data from all media.

ICIS features include:

- Desktop access
- Internet access
- Integrated data
- Real time entry and retrieval of data
- Powerful reporting capabilities
- User friendly.

3. DOCUMENTATION/ RECORDKEEPING AND REPORTING

Contents Page

A. Inspection Authority and Objectives 3-1
Authority and Objectives 3-1

B. Evaluation Procedures 3-3
Verification, Recordkeeping, and Reporting Evaluation Procedures 3-3
Compliance Schedule Status Review 3-5
POTW Pretreatment Requirements Review 3-7
In-depth Investigations 3-8

C. Verification, Recordkeeping, and Reporting Evaluation Checklist 3-11

D. Digitized Video Clip - Records & Reports . . . . . (CD-Rom Insert in binder)

Associated Appendices

K. Sample Discharge Monitoring Report Form

This page intentionally left blank.

3. A. Inspection Authority and Objectives

Authority and Objectives

Statutory Recordkeeping Authority:	Clean Water Act (CWA) §308 and §402
Regulatory Requirements:	40 *Code of Federal Regulations (CFR)* Parts 122, 136, 401, 403, 405-471, and 503, as applicable
Inspection Authority:	CWA §308

The National Pollutant Discharge Elimination System (NPDES) permit system requires permittees to maintain records and report periodically on the amount and nature of discharged effluent waste components. The permit stipulates recordkeeping and reporting conditions. Evaluations are conducted at selected permitted facilities to determine compliance with permit requirements. The procedures listed below should be used for these routine inspections. If suspected violations are disclosed during the routine evaluation, a more intensive investigation should be conducted.

A review of facility records should determine that recordkeeping requirements are being met. The following questions should be answered in particular:

- Is facility verifying data being collected as required by the permit?
- Is all required information available?
- Is the information current?
- Is the information being maintained for the required time period?
- Do the records reviewed indicate areas needing further investigation?
- Are the records organized?
- Do the records show compliance?

This page intentionally left blank.

3. B. Evaluation Procedures

Verification, Recordkeeping, and Reporting Evaluation Procedures

During the facility site inspection, the inspector should verify the following requirements of the permit:

- That the number and location of discharges are as described in the permit

- That all discharges, if permitted are in accordance with the general provisions of the permit, such as no noxious odors, no visible entrained solids in discharge, no deposits at or downstream of the outfall, no color change in the receiving stream, and no fish or vegetation kills near the outfalls.

The inspector should review the permit to determine recordkeeping and reporting requirements. Throughout the inspection, the inspector should compare facility's operations with the permit to verify that required permit activities are correct, current, and complete. Obtain some of the information needed to verify the permit during the opening conference and compare with the facility permit. This information includes:

- Correct name and address of facility
- Correct name and location of receiving waters
- Number and location of discharge points, if any
- Principal products and production rates (where appropriate).

The inspector should check for records that will verify that notification has been made to the Environmental Protection Agency (EPA) or to the State when: (1) discharges differ from those stated in the permit, (2) a discharge violates the permit, and (3) a bypass has occurred. The inspector should also check to ensure that the facility maintains the appropriate records for a minimum of 3 years (or 5 years for sewage sludge). These records may include the following:

- Sampling and Analysis Data

  - Dates, times, and locations of sampling
  - Sample types collected
  - Analytical methods and techniques
  - Results of analyses
  - Dates and times of analyses
  - Name(s) of analytical and sampling personnel.

- Monitoring Records

  - Discharge Monitoring Reports (DMRs), including information on flow, pH, Dissolved Oxygen (DO), etc., as required by permit. A blank DMR form is included in Appendix K.
  - Original charts from continuous monitoring instrumentation.
  - It is important for the inspector to verify the validity of the data on the DMRs. Provide this verification by tracking the raw data from the laboratory bench sheets or other

databases to the final reported DMR entries.

- Laboratory Records

  - Calibration and maintenance of equipment
  - Calculations (i.e., on bench sheets or books)
  - Quality Assurance/Quality Control (QA/QC) analysis data
  - Laboratory Standard Operating Procedures (SOPs)
  - Results of DMRQA studies.

- Facility Operating Records

  - Daily operating log
  - Summary of all laboratory tests run and other required measurements, including reference test method used (general reference to Standard Methods or 40 *CFR* Part 136 methods is not adequate)
  - Chemicals used (pounds of chlorine per day, etc.)
  - Weather conditions (temperature, precipitation, etc.)
  - Equipment maintenance completed and scheduled
  - Spare parts inventory
  - Flowmeter and pH meter calibration records.

- Treatment Plant Records (required as part of the Federal Construction Grants program)

  - Plant Operations and Maintenance (O&M) Manual
  - Percent removal records
  - "As built" engineering drawings
  - Copy of construction specifications
  - Equipment supplier manual
  - Data cards on all equipment.

- Management Records

  - Average monthly operating records
  - Annual reports
  - Emergency conditions (power failures, bypass, and chlorine failure reports, etc.).

- Pretreatment Records

  - Publicly Owned Treatment Works (POTW) and industrial monitoring and reporting requirements
  - Industrial user discharge data
  - Compliance status records
  - POTW enforcement initiatives.

- Risk Management Plan (RMP)
- Storm Water Pollution Prevention Plan (SWPPP)
- Spill Prevention Control and Countermeasure (SPCC) Plan

  When required, a properly completed RMP, SWPPP, and/or SPCC Plan should be available. The inspector also may gather information on the SPCC and forward this information to the appropriate program office for follow-up action plans.

- Best Management Practices (where required)

  Two types of Best Management Practice (BMP) plans are included in NPDES permits:

  - BMP plans to minimize or prevent release of significant amounts of any toxic or hazardous pollutants to public waters. The plans may discuss general operations and maintenance of the plant, good housekeeping procedures on the facility grounds, and other plans and procedures specific to best management of the facility.
  - Site-specific BMP plans to address particular toxic or hazardous chemicals or other conditions particular to the facility. Site-specific BMP may include procedures, monitoring requirements, construction of barriers such as dikes and berms, or other appropriate measures for solving specific problems.

In addition, inspectors should ensure that sludge records to verify compliance with 40 *CFR* Part 503 are maintained for a minimum of 5 years. Facility needs to keep records to be reviewed (such as sludge records and laboratory records) onsite for the inspector.

The inspector should document all inspection activities (see Chapter Two, Section D). Inadequacies, discrepancies, or other problems disclosed during this review may warrant more intensive investigation.

The inspector should validate (or obtain) accurate outfall locational data during the inspection. Locational data includes the precise latitude and longitude of each outfall (including metadata such as source, datum, precision, etc.). This EPA requires the information as part of the EPA permit applications, for all outfalls in modernized PCS. Locational data are becoming increasingly critical for Agency-wide geospatical applications, including everything from mapping to prioritizing enforcement and permitting efforts.

Compliance Schedule Status Review

If the permit contains a compliance schedule or if the facility is under an enforcement action with a compliance schedule, the inspector should determine:

- Whether the permittee is conforming to the compliance schedule and, if not, whether final requirements will be achieved on time

- The accuracy of reports relating to compliance schedules

- The length of delay associated with a particular construction violation

- Whether any schedule violations are beyond the control of the discharger
- Whether requests for permit modifications are valid.

If the permit contains a compliance schedule address the schedule in detail only if the need becomes apparent during records review and preparation of the inspection plan. Actions to look at should included beginning new construction, contract and equipment orders, authorization and financing arrangements, and/or attainment of operational status. The specific compliance schedule actions are described below.

Construction Progress

The inspector must know whether contracts for labor and material have been fulfilled and whether the permittee or the permittee's engineering consultant is monitoring progress. These aspects are extremely important, particularly in plants where numerous contracts are likely for labor and equipment.

If the permittee or the engineering consultant reports that construction or acquisition of equipment is behind schedule, the inspector should:

- Ask to see the permittee's or the resident engineer's progress report and determine whether the report indicates that the final compliance schedule required by the permit can be met.
- If the report indicates that the final date will not be met, advise the permittee that the compliance schedule of the NPDES permit requires the permittee to notify the permit-issuing authority promptly of any possible delay in achieving compliance and of measures taken to minimize the delay.
- Inquire whether the facility superintendent or chief operator and operating personnel are receiving adequate training concerning the operational aspects of the new treatment unit while construction is under way. They must be prepared to perform the essential operating functions when the facility is placed in service.

Construction Contracts and Equipment Orders

The inspector should review the appropriate documents to determine whether the permittee has obtained the necessary approval to begin construction. The inspector should note the start and completion dates (or scheduled delivery dates in service or equipment contracts).

Authorization and Financing

If construction is incomplete, the inspector should determine whether the permittee has the authority and financial capability (mortgage commitments, corporate resolution, etc.) to complete the required structures.

Attainment of Operational Status

If construction has been completed but the facility is not yet operational, the inspector should determine whether the facility is using appropriate procedures to ensure attainment of working status at the earliest possible time. The inspector should verify the following:

- Adequate self-monitoring procedures that the facility has initiated. It is especially important that the result of operational and effluent quality monitoring be reviewed to determine whether progress is being made toward optimum efficiency in each treatment unit and in the entire plant.
- Adequate recordkeeping procedures.
- Adequate work schedules and assignments. (For municipal facilities, the O&M Manual should provide essential guidance.)

POTW Pretreatment Requirements Review

The inspector must collect specific information to evaluate compliance with pretreatment requirements. A summary using the following procedures below and for more detail see Chapter Nine, "Pretreatment."

As part of the inspection, the inspector must collect information about the POTW's compliance with its approved pretreatment program and applicable regulations as well as the compliance status of its industrial users with categorical pretreatment standards or locally developed discharge limitations. The inspector should review POTW records to determine the following:

- Whether all the contributing industries, including the number of significant industrial users are accounted.
- Whether all industries are properly identified and classified.
- Whether industries have submitted required reports and notifications to the POTW. These include baseline monitoring reports, 90-day compliance reports, periodic compliance reports, notifications of changed discharge, potential problem discharges, violation and resampling, and hazardous waste discharge.
- Whether the number of contributing industries are in compliance with applicable standards.
- Whether permits containing all required elements have been issued to significant industrial users in a timely manner.
- Whether inspections and sampling (including evaluation of the need for slug control plans) of significant industrial users are conducted at the required frequency.
- Whether the POTW has notified all affected users of classification and applicable

standards and requirements, including Resource Conservation and Recovery Act (RCRA) obligations.

- Whether appropriate enforcement actions have been taken against all noncompliant industries and whether the names of all users in significant noncompliance are published at least annually.

- Whether contributing industries with compliance schedules are meeting applicable schedule deadlines and compliance schedule reporting requirements.

In-depth Investigations

When necessary conduct an in-depth inspection of a permittee's records and reports to substantiate a suspected violation, to verify self-monitoring data to use as corroborative evidence in an enforcement action, or to confirm apparent sampling, analysis, or reporting discrepancies discovered during the limited inspection. Discrepancies warrant an in-depth review if, for example:

- Suspect the discharge does not meet required standards and no definite operational problems have been established.

- Suspect grossly inaccurate self-reporting data with recordkeeping procedures and/or the filing of reports.

- Suspect the cursory review indicates omissions or laxity in the preparation of records.

- Suspect evidence of falsification of records

- Suspect laboratory review of analytical data indicates errors in QC or data management.

Confer with supervisor for more guidance and assistance as needed in performing an in-depth investigation.

In-depth Investigation Procedures

The following procedures should guide the inspector in conducting an in-depth investigation:

- Determine Investigation Objective. What is the specific purpose of the investigation?

- Determine Information Needed. What specific data will substantiate a violation or respond to the investigation objective?

- Determine Data Source. What records will contain these required data?

- Review Inspection Authority. Authority to inspect under Section 308 is limited to those records required by the permit/regulations.

- Inspect Direct and Indirect Data Sources. Examine records likely to provide the required data directly. In the absence of direct data, use indirect sources of information can be used to develop a network of information relevant to the data being sought.

- Take Statements From Qualified Facility Personnel. See Chapter Two, Section D, for procedures.

- Prepare Documentation. Copy and identify all records relevant to the information being sought; see Chapter Two, Section D, for specific procedures.

- Follow Confidentiality Procedures. Any record inspected may be claimed by the facility as confidential. Treated such records in accordance with EPA procedures; see Chapter Two, Section D, the discussion on Confidential Business Information.

This page intentionally left blank.

3. C. Verification, Recordkeeping, and Reporting Evaluation Checklist

VERIFICATION, RECORDKEEPING, AND REPORTING EVALUATION CHECKLIST

A. PERMIT VERIFICATION

Mailing Address:

_____

_____

_____

_____

Brief Facility Description:

_____

_____

_____

Yes	No	N/A	1.	Inspection observations verify information contained in permit.
Yes	No	N/A	2.	Current copy of permit is onsite.
Yes	No	N/A	3.	Name and mailing address of permittee are correct.
Yes	No	N/A	4.	Facility is as described in permit.
Yes	No	N/A	5.	Notification was given to EPA/State of new, different, or increased discharges.
Yes	No	N/A	6.	Facility maintains accurate records of influent volume, when appropriate.
Yes	No	N/A	7.	Number and location of discharge points are as described in permit.
Yes	No	N/A	8.	Records accurately identify name and location of receiving waters.
Yes	No	N/A	9.	All discharges are permitted.
Yes	No	N/A	10.	The facility used Federal Construction Grant funds to build the plant.

VERIFICATION, RECORDKEEPING, AND REPORTING EVALUATION CHECKLIST (Continued)

B. RECORDKEEPING AND REPORTING EVALUATION

Yes	No	N/A	1. Maintain records and reports as required by permit.
Yes	No	N/A	2. All required information is available, complete, and current.
Yes	No	N/A	3. Information is maintained for 3 years (or 5 years for sewage sludge).
Yes	No	N/A	4. If the facility monitors more frequently than required by permit (using approved methods), these are results reported.
			5. Analytical results are consistent with data reported on DMRs.
Yes	No	N/A	a. The data moves accurately from the bench sheets to the DMRs
Yes	No	N/A	b. The calculations are performed properly (including loading, averages, etc.)
			6. Sampling and analyses data are adequate and include:
Yes	No	N/A	a. Dates, times, and location of sampling
Yes	No	N/A	b. Name of individual performing sampling
Yes	No	N/A	c. Analytical methods and techniques
Yes	No	N/A	d. Results of analyses and calibration
Yes	No	N/A	e. Dates of analyses
Yes	No	N/A	f. Name of person performing analyses
Yes	No	N/A	g. Instantaneous flow at grab sample stations.
			7. Monitoring records are adequate and include:
Yes	No	N/A	a. Flow, pH, DO, etc., as required by permit
Yes	No	N/A	b. Monitoring charts kept for 3 years (or 5 years for sewage sludge)
Yes	No	N/A	c. Flowmeter calibration records kept.
Yes	No	N/A	d. Locational data (latitude and longitude of each outfall)
Yes	No	N/A	8. Laboratory equipment calibration and maintenance records are adequate.
Yes	No	N/A	9. Plant records* are adequate and include:
Yes	No	N/A	a. O&M Manual
Yes	No	N/A	b. "As-built" engineering drawings
Yes	No	N/A	c. Schedules and dates of equipment maintenance repairs
Yes	No	N/A	d. Equipment supplies manual
Yes	No	N/A	e. Equipment data cards.
Yes	No	N/A	* Required only for facilities built with Federal Construction Grant funds.
			10. Pretreatment records are adequate and contain inventory of industrial waste contributors, including:
Yes	No	N/A	a. Monitoring data
Yes	No	N/A	b. Inspection reports
Yes	No	N/A	c. Compliance status records
Yes	No	N/A	d. Enforcement actions.

VERIFICATION, RECORDKEEPING, AND REPORTING EVALUATION CHECKLIST (Continued)

C. COMPLIANCE SCHEDULE STATUS REVIEW

Yes	No	N/A	1. Permittee is meeting compliance schedule.
Yes	No	N/A	2. Permittee has obtained necessary approvals to begin construction.
Yes	No	N/A	3. Financing arrangements are complete.
Yes	No	N/A	4. Executed contracts for engineering services.
Yes	No	N/A	5. Completed design plans and specifications.
Yes	No	N/A	6. Construction has begun.
Yes	No	N/A	7. Construction is on schedule.
Yes	No	N/A	8. Equipment acquisition is on schedule.
Yes	No	N/A	9. Facility has completed construction.
Yes	No	N/A	10. Startup has begun.
Yes	No	N/A	11. Permittee has requested an extension of time.
Yes	No	N/A	12. Permittee has met compliance schedule.

D. POTW PRETREATMENT REQUIREMENTS REVIEW

Yes	No	N/A	THE FACILITY IS SUBJECT TO PRETREATMENT REQUIREMENTS
			1. Status of POTW pretreatment program
Yes	No	N/A	a. EPA approved the POTW pretreatment program. (If not, is approval in progress?)
Yes	No	N/A	b. The POTW is in compliance with the pretreatment program compliance schedule. (If not, note why, what is due, and intent of the POTW to remedy.)
			2. Status of Compliance with Categorical Pretreatment Standards.
			a. Number POTW industrial users, Federal or State, subject to pretreatment standards?
Yes	No	N/A	b. Are these industries aware of their responsibility to comply with applicable standards?
Yes	No	N/A	c. Has the facility submitted baseline monitoring reports (403.12) for these industries?
Yes	No	N/A	i. Have categorical industries in noncompliance (on BMR reports) submitted compliance schedules?
			ii. How many categorical industries on compliance schedules are meeting the schedule deadlines?
Yes	No	N/A	d. If the compliance deadline has passed, have all industries submitted 90-day compliance reports?
Yes	No	N/A	e. Are all categorical industries submitting the required semiannual report?

VERIFICATION, RECORDKEEPING, AND REPORTING EVALUATION CHECKLIST (Continued)

Yes	No	N/A	f.	Are all new industrial discharges in compliance with new source pretreatment standards?
Yes	No	N/A	g.	Has the POTW submitted an annual pretreatment report?
Yes	No	N/A	h.	Has the POTW taken enforcement action against noncomplying industrial users?
Yes	No	N/A	i.	Is the POTW conducting inspections of industrial contributors?
Yes	No	N/A	3.	Are the industrial users subject to Prohibited Limits (403.5) and Local Limits more stringent than EPA in compliance? (If not, explain why, including need for revision of limits.)

4. FACILITY SITE REVIEW

Contents Page

A. Objectives 4-1

B. Physical Inspection of the Facility 4-3
General Conditions in Overall Plant 4-4
Preliminary Treatment at the Headquarters 4-5
Primary Clarifier 4-6
Secondary Biological Treatment Units 4-6
Secondary Clarifier 4-7
Advanced Physical Treatment Units 4-8
Disinfection 4-9
Sludge Handling 4-10
Polishing Ponds or Tanks 4-13
Plant Effluent 4-13
Flow Measurement 4-13
Chemical Treatment Units 4-13
Standby Power and Alarms 4-14
General Housekeeping 4-14
Production Changes 4-14

C. Operation and Maintenance Evaluation 4-17
Operation Evaluation 4-17
Maintenance Evaluation 4-25

D. References and Facility Site Review Checklist 4-27
References 4-27
Facility Site Review Checklist 4-29

List of Tables

4-1. Operation and Maintenance Function Evaluation Questions 4-18

List of Figures

4-1. General Waste Water Treatment Plant Flow Diagram 4-32

This page left intentionally blank.

4. A. Objectives

In performing a facility site review, an inspector examines process treatment units, sampling and flow monitoring equipment, outfalls, and the receiving stream. In particular, the inspector focuses on areas of the permittee's premises where pollutants are generated, pumped, conveyed, treated, stored, or disposed of. The proper conduct of a facility site review requires that the inspector understand fully the wastewater treatment processes used at the facility and how each process fits into the overall treatment scheme. A General Wastewater Treatment Plant Flow Diagram is included at the end of this chapter. (See Figure 4-1.)

The objectives of a facility site review are to:

- Assess the conditions of the facility's current treatment processes and operations
- Evaluate the permittee's operation and maintenance activities
- Check the completeness and accuracy of the permittee's performance/compliance records
- Determine whether the treatment units are achieving the required treatment efficiencies.

During the overall review of the facility, the compliance inspector becomes more knowledgeable about the facility being inspected, reviews areas that may indicate problems with effluent limitations, and evaluates overall performance of the treatment facility. The information in this chapter is comprehensive and is based on performing an inspection at a Publicly Owned Treatment Works (POTW). Inspectors should use only the information applicable to a particular situation. This chapter includes a Facility Site Review Checklist for the inspector's use at the end of this chapter.

This page left intentionally blank.

4. B. Physical Inspection of the Facility

During the "walk-through" of the facility, the inspector should pay attention to the operational factors listed below. The inspector needs to carefully document the physical inspection. The inspector should look at and record the following:

- Influent characteristics, including:
  - Appearance (color, odor, etc.)
  - Combined sewer loads
  - Infiltration/inflow
  - Industrial contributions
  - Diurnal/seasonal loading variations
- Process control
- Unit operations including supply of treatment chemicals
- Equipment condition
- Maintenance and operation staff
- Safety controls and equipment
- Effluent characteristics, including:
  - Appearance of discharge
  - Receiving stream appearance including any staining. deposits, or eutrophication
  - Evidence of toxicity of the discharge
- Other conditions particular to the plant.

The Environmental Protection Agency's (EPA's) *Field Manual for Performance Evaluation and Trouble Shooting at Municipal Wastewater Facilities* (USEPA 1978), published by the Municipal Operations Branch of EPA, is a good reference for operational characteristics of plants.

The physical inspection may lead the inspector to determine:

- Whether a major facility design problem may require an engineering solution

- Whether problems can be solved through proper operation and maintenance of the treatment facilities

- Whether periodic equipment malfunctions the facility needs to address by complete overhaul or replacement of equipment.

If a facility design problem exists, one of the recommendations will be that the facility develop engineering solutions. The inspector may evaluate the operation and maintenance procedures from the viewpoint of what can be done to simplify the solution. When the inspection findings indicate that specific practices of the facility contribute to or cause problems, the inspector should detail the problems. When possible, the inspector should use the information to evaluate the operation and maintenance procedures.

When conducting the walk-through, the inspector should be aware of and look for physical conditions that indicate past, existing, or potential problems. The presence of these conditions will give the inspector an idea of the types of problems present, the parts of the treatment

process causing the problems, and the potential solution to existing problems. Conditions to look for in the plant generally and in specific processes are listed in the following sections.

General Conditions in Overall Plant

General Indicators

- Excessive scum buildup; grease, foam, or floating sludge in clarifiers
- Hydraulic overload caused by storms, discharges of cooling water, or undersized facility or process
- Noxious odors in wet wells and grit chambers and around aerobic and anaerobic biological units, scum removal devices, and sludge handling and treatment facilities
- Evidence of severe corrosion at the treatment plant and in the collection system
- Discoloration of the ground or a strong chemical smell may indicate past spills at the plant; further investigation of spills may be warranted
- Vital treatment units out of service for repairs. Determine when the units went out of service, the type of failure, and when they will be put back in service
- Excessive noise from process or treatment equipment
- Any unusual equipment intended to correct operation problems (e.g., special pumps, floating aerators in diffused air systems, chemical feeders, temporary construction or structures, or any improvised system)
- Ruptures in chemical feed lines.

Flow Indicators

- Surcharging of influent lines, overflow weirs, and other structures
- Hydraulicly overloaded process or equipment
- Flow through bypass channels
- Overflows at alternative discharge points, channels, or other areas
- Excessive septage dumping by septic tank pumpers
- Flow from unknown source or origin
- Open-ended pipes that appear to originate in a process or storage area and periodically contain flows to the ground or to surface water. Although these pipes have been disconnected from a closed system or otherwise removed from service, they can still be connected to a discharge source
- Flow charts indicating acute Infiltration and Inflow (I/I) problems following rain events.

Unusual Wastes Indicators

- Collected screenings, slurries, sludges, waste piles, or by-products of treatment. Their disposal, including runoff of any water, must be such that none enters navigable waters or their tributaries.
- Improper or lack of recycling of filtrates and supernatants from sludge dewatering and treatment.
- Improper storage of chemicals and hazardous substances with particular attention to the proper diking of chemicals and hazardous substances and segregation of incompatible chemicals. Generally, spill containment should be such that the dike could contain the contents of the largest tank.
- Spills or mishandling of chemicals.

Preliminary Treatment at the Headquarters

Screening

- Excessive screen clogging
- Excessive buildup of debris against screen
- Oil and grease buildup
- Improper disposal of screenings
- Excessive odors
- Pass thru of grease and debris that shows up in the final effluent or “pass through.”

Shredding/Grinding

- Bypass of shredding/grinding equipment
- Equipment removed or inoperable.

Grit Removal

- Grit chamber clogged or subject to odors
- Less than typical grit accumulation
- Excessive organic content of grit
- Wear of grit removal/handling equipment
- Excessive odors in grit removal area.

Influent Pumping

- Inadequate pumping capacity during periods of high influent flow
- Not operable pumps.

Flow Equalization

- Equalization tank never empty
- Excessive odors
- Inoperable aerators, if aerated
- Ability to bypass directly to surface water.

Primary Clarifier

General Indicators

- Excessive gas bubbles or grease on surface
- Black and odorous wastewater
- Poor removal of suspended solids in primary clarifier
- Excessive buildup of solids in center well of circular clarifier
- Unlevel discharge weirs
- Fouling of overflow weirs
- Evidence of short circuiting
- Ineffective scum rake
- Scum overflow or lack of adequate scum disposal, full scum pit
- Excessive floating sludge and/or scum
- Excessive sludge on bottom, inadequate sludge removal
- Noisy sludge scraper drive
- Broken sludge scraper equipment
- Poor maintenance of sludge pumps (leaking) or pump gallery.

Secondary Biological Treatment Units

Trickling Filter/Activated Biofilters

- Filter ponding (indicating clogged media)
- Collapsed media
- Leak at center column of filter's distribution arms
- Uneven distribution of flow on filter surface
- Uneven or discolored growth
- Excessive sloughing of growth
- Odor
- Clogging of trickling filter's distribution arm orifices
- Restricted rotation of distribution arms
- Filter flies, worms, or snails
- Ice buildup on trickling filter media or distribution arms
- Inappropriate recirculation rate.

Rotating Biological Contactors

- Odor
- Development of white biomass on rotating biological contactor (RBC) media
- Excessive sloughing of growth
- Excessive breakage of rotating disks or shafts in RBC units
- Shaft, bearing, drive gear, or motor failure
- Solids accumulation in RBC units.

Activated Sludge Tanks

- Excessive breakage of paddles on brush aerators
- Shaft, bearing, drive gear, or motor failure on disk or brush aerators
- Dead spots in aeration tanks
- Failure of surface aerators
- Inoperative air compressors
- Air rising unevenly
- Excessive air leaks in compressed air piping
- Dark mixed liquor in aeration tank (grey or black)
- Dark foam or bad odor on aeration tanks
- Stable dark tan foam on aeration tanks that sprays cannot break up
- Thick billows of white, sudsy foam on aeration tank
- Low Dissolved Oxygen (DO, < 1.0 mg/l) in aeration tank (except in areas used for denitrification)
- Inadequate amount of return activated sludge rates
- Improper MLSS concentration (not using basin to hold excess solids inventory).

Stabilization Ponds/Lagoons

- Trees growing on the bank, or within the root zone distance from the bank.
- Erosion of stabilization pond bank or dike
- Excessive foliage or animal burrows in pond bank or dike
- Excessive weeds in stabilization ponds
- Foaming and spray in aerated lagoon
- Dead fish or aquatic organisms
- Buildup of solids around influent pipe
- Excessive scum on surface.

Secondary Clarifier

General Indicators

- Excessive gas bubbles on surface
- Fouling of overflow weirs
- Unlevel overflow weirs
- Evidence of short circuiting

- Excessive buildup of solids in center well of circular clarifier
- Deflocculation in clarifier
- Pin floc in overflow
- Ineffective scum rake
- Floating sludge on surface; rising sludge or bulking sludge
- Billowing sludge
- Excessively high sludge blanket
- Clogged sludge withdrawal ports on secondary clarifier for either sludge wasting or sludge return
- Unequal sludge blanket levels in parallel units
- Inappropriate return and wasting rates
- Poor maintenance of sludge pumps (leaking) or pump gallery.

Advanced Physical Treatment Units

Filtration

- Filter surface clogging
- Short filter run
- Air displacement of gravel media
- Formation of mud balls in filter media
- Air binding of filter media
- Loss of filter media during backwashing
- Recycled filter backwash water in excess of 5 percent
- Excessive effluent turbidity.

Microscreening

- Erratic rotation of microscreen drums
- Plugging
- Drive system noisy or overheating
- Backwash in excess of 5% of flow treated.

Activated Carbon Adsorption

- Excessive biological growth resulting in strong odor
- pH above 9.0 Standard Units (S.U.)
- Plugged carbon pores
- Presence of carbon fines (dust) in effluent
- Excessive carbon regeneration.

Nitrification

- Hydraulic overload
- Inadequate pH control/chemical addition

- Pin floc in final effluent
- Sludge rising because of gasification in secondary clarifier.

Denitrification

- Temperature below 15°C
- pH below 6.0 S.U. or above 8.0 S.U.
- Excessive methanol or other chemical additions
- Septic sludge conditions.

Ammonia Stripping

- Excessive hydraulic loading rate
- Tower packing coated with calcium carbonate
- pH below 10.8 S.U.
- Inadequate tower packing depth
- Air temperature below 65°F.

Disinfection

Chlorination

- Sludge buildup in contact chamber
- Gas bubbles
- Inadequate retention time
- Floating scum and/or solids
- Evidence of short circuiting
- Inadequate ventilation of chlorine feeding room and storage area
- High temperatures in chlorination rooms
- Improper operation of automatic feed or feedback control
- Excessive foaming downstream
- Evidence of toxicity downstream (dead fish, other dead organisms)
- Improper chlorine feed, storage, and reserve supply
- Leak detection equipment is tied into the plant alarm system
- SCBAs available on-site
- Proper training in use of SCBA
- Lack emergency SOP and/or RMP (Risk Management Plan)
- No chlorine repair kit available.

Dechlorination

- Improper storage of sulfur dioxide cylinders
- Inadequate ventilation of sulfur dioxide feeding room
- Automatic sulfur dioxide feed or feedback control not operating properly
- Depressed DO after dechlorination

- Improper storage and mixture of sodium metabisulfite containers
- Reduced efficiency of activated carbon dechlorination units because of organic and inorganic compound interference
- No SCBAs available on-site
- Improper training in use of SCBA
- No emergency SOP and/or RMP.

Ultraviolet (UV)

- Quartz sleeves not kept clean
- Bulbs are not all operational
- Effluent has high turbidity
- Fecal coliform tests show inadequate bacterial kill.

Sludge Handling

General Indicators

- The facility does not waste sludge
- Inadequate sludge removal from clarifiers or thickeners
- Poor dewatering characteristics of thermal treated sludge
- Thickened sludge too thin
- Fouling of overflow weirs on gravity thickeners
- Air flotation skimmer blade binding on beaching plate
- Substantial down time of sludge treatment units
- Sludge disposal inadequate to keep treatment system in balance - storing excess sludge inventory within other treatment units such as activated sludge basin, or clarifiers due to inadequate sludge wasting capabilities
- Mass balance inappropriate (ratio of sludge wasted should be 0.65-0.85 lbs of sludge per lb of Biochemical Oxygen Demand (BOD) removed)
- Sludge decant or return flows high in solids
- Odors
- Improper loading rates
- Lack of adequate process control (unit removal efficiencies, DO, sludge age, F/M ratio, etc.).

Sludge Anaerobic Digestion

- Inoperative mechanical or gas mixers
- Inoperative sludge heater or low temperature
- Floating cover of digester tilting
- Inadequate gas production
- Inoperative gas burner
- Supernatant exuding a sour odor from either primary or secondary digester
- Excessive suspended solids in supernatant
- Supernatant recycle overloading the Wastewater Treatment Plant (WWTP)
- pH problems.

Sludge Aerobic Digestion

- Excessive foaming in tank
- Objectionable odor in aerobically digested sludge
- Insufficient dissolved oxygen in digester
- Digester overloaded
- Clogging of diffusers in digester
- Mechanical aerator failure in digester
- Inadequate supernatant removal from sludge lagoons
- Solids accumulation in tank.

Sludge Dewatering

Drying beds

- Poor sludge distribution on drying beds
- Vegetation in drying beds (unless reed design)
- Dry sludge remaining in drying beds (storage)
- Inadequate drying time on drying beds
- Some unused drying beds
- Dry sludge stacked around drying beds where runoff may enter navigable waters
- Filtrate from sludge drying beds returned to front of plant
- Inadequate sludge wasting capabilities as indicated by all beds being full, and maintaining a high solids inventory within the treatment units.

Centrifuge

- Excessive solids in fluid phase of sample after centrifugation
- Inadequate dryness of centrifugal sludge cake
- Excessive vibration or other mechanical problems.

Filter Press

- High level of solids in filtrate from filter presses or vacuum filters
- Thin filter cake caused by poor dewatering
- Vacuum filter cloth binding
- Low vacuum on filter
- Improperly cleaned vacuum filter media
- Sludge buildup on belts and/or rollers of filter press
- Excessive moisture in belt filter press sludge cake
- Difficult cake discharge from filter presses
- Filter cake sticks to solids-conveying equipment of filter press
- Frequent media binding of plate filter press
- Sludge blowing out of filter press
- Insufficient run time of sludge dewatering equipment.

Sludge Stabilization

Lagoon

- Objectionable odor from sludge lagoon
- Damage to dikes around sludge drying lagoons
- Unlined sludge lagoons
- Sludge lagoons full, overflowing sludge back to plant or to natural drainage
- Deep rooted vegetation on dikes or berms.

Composting

- Piles that give off foul odor
- Inoperable blower
- Temperature does not reach 122-140°F (50-60°C)
- Uncontrolled storm water runoff.

Heat Drying/Pelletizing

- Excess moisture in sludge feed
- Insufficient air flow or drying temperature achieved
- Inadequate drying of final product (excess moisture in final product)
- Excess odors associated with treatment area
- Excess odors associated with treated product.

Alkaline Stabilization

- Insufficient amount of lime (or other alkaline additive) used to ensure pH is raised sufficiently
- Inadequate mixing provided to ensure good contact of lime (or other alkaline additive) with sludge solids
- pH problems
- Excess odors associated with treatment area
- Excess odors associated with treated product
- Excessive lime dust around treatment equipment.

Incineration

- Objectionable odors associated with treatment area
- Evidence of excessive dust (ash) around unit
- Visible smoke or dust exhaust from unit
- Lack of compliance with air permit parameters
- Spilling or leaking sludge from dewatered sludge transfer equipment.

Sludge Disposal

- Sludge constituents not analyzed before disposal
- Sludge not transported in appropriate and approved vehicle
- Surface runoff of sludge at land application site
- Liquid sludge (i.e., less than 10 percent solids) applied to landfill site
- Sludge fails paint filter test
- Inadequate coverage of sludge in subsurface plow injection system
- Objectionable odors generated at land application site

- Slow drying of soil-sludge mixture in subsurface injection system
- Sludge pooling at land application sites
- Flies breeding, vectors, and/or odors at landfill site
- Inadequate burial of sludge at landfill site
- Excessive erosion at sludge sites
- Sludge disposed of in nonpermitted sites
- Disposal not in accordance with Federal, State, or local regulations
- Sludge lagoons full and overflowing
- Inadequate runoff control at landfill or land application sites.

Polishing Ponds or Tanks

- Objectionable odor, excessive foam, floating solids, or oil sheens in polishing ponds or tanks
- Solids or scum accumulations in tank or at side of pond
- Evidence of bypassed polishing ponds or tanks.

Plant Effluent

- Excessive suspended solids, turbidity, foam, grease, scum, color, and other macroscopic particulate matter present
- Potential toxicity (dead fish, dead plants at discharge)
- Stained sediments in receiving waters
- Sludge in the receiving water, anaerobic sediments, and blood worms
- Low dissolved oxygen content
- Eutrophication.

Flow Measurement

- Improper placement of flow measurement device
- Flow totalizer not calibrated
- Buildup of solids in flume or weir
- Broken or cracked flume or weir
- Improperly functioning magnetic flowmeter
- Clogged or broken stilling wells
- Weir plate edge corroded or damaged, not sharp edged (< 1/8"), or not level
- System not capable of measuring maximum flow
- Sizing of system adequate to handle flow range
- Flow measurement error greater than ± 10%
- Flow measurement that includes all wastewater discharged and does not include wastestreams that are recirculated back to the treatment plant.

Chemical Treatment Units

- Evident heavy corrosion
- No portion-measuring device at feed unit
- pH measuring not evident at pH adjustment tank
- Chemicals left open when they should be closed
- Chemicals outdated
- Chemical containers stored improperly or hazardously
- Inappropriately stored, moved, or handled chemical tank cars (trucks or train)
- Spilled dry chemicals on floor between storage area and feed units
- Improperly disposed of empty chemical containers
- Large containers handled improperly, container transfer equipment not maintained
- No appropriate sized berms or dikes at liquid chemical feed units
- Inadequate supply of chemicals
- Chemical dust covering feed unit area or storage and transfer areas
- Use of an inappropriate coagulant
- Improperly stored or handled glass carboys (acid storage).

Standby Power and Alarms

- Emergency generator with no automatic switch-over
- Generator not regularly checked and exercised
- No separate electrical substation feed line
- Portable generators with quick connects
- Portion of plant operated by the standby power
- Treatment units and headworks equipped with alarms to notify operations staff of unit failure or loss of power
- SCADA (Supervisory Control and Data Available)
  - Only large facilities tend to have this equipment
  - SCADA to monitor and operate lift station in the collection system.

General Housekeeping

- Facility control panel in disrepair or not in use
- Wastewater pipelines not clearly distinguished from product pipelines
- Spills or leaks in dry areas not remediated in a timely manner.

Production Changes

Industries frequently make production changes because of advances in technology and availability of new products. Therefore, during the tour of an industrial facility, the inspector also should inquire about the following:

- Whether a permittee has last made any changes to:
  - Production processes
  - Raw materials
  - Amount of intermediate and/or finished product
  - Water use
  - Water reuse or recycling
  - Waste treatment processes
  - Other such changes
- Whether the permittee has modified any production process that would change the pollutant types or loadings
- Whether the regulatory agency (EPA, State, or local municipality as appropriate) was notified of such changes
- What changes will need to be reflected in any National Pollutant Discharge Elimination System (NPDES) or local permit modifications.

The inspector should verify any changes and include the results of the findings and other pertinent information in the Compliance Inspection Report. Changes in the loading to Publicly Owned Treatment Works (POTWs) by the addition of a significant industrial discharger or large population growth also should be ascertained and reported.

This page intentionally left blank.

4. C. Operation and Maintenance Evaluation

Operation Evaluation

Operating factors affecting plant performance range from qualitative factors such as the skills and aptitudes of operators (e.g., process knowledge and general aptitude), to physical deficiencies in laboratory equipment or a lack of flexibility in process equipment. The evaluation of operation functions must focus on wastewater treatment, sludge treatment/ disposal, and laboratory analysis. The evaluation should be based on the following topics:

- Policies and procedures
- Organization
- Staffing and training
- Planning
- Management controls.

Table 4-1 presents the basic review questions that an inspector should ask in evaluating operation functions. Although each of the preceding evaluation topics must be covered in the review of operation functions, the four areas discussed in the following paragraphs should particularly concern the inspector:

Policies and Procedures

Written operating procedures and standard reference texts enable the operator to achieve efficient plant operation. The operations manual prepared for the facility is the most important reference that an inspector should review when evaluating plant policies and procedures. Other reference materials relating to operations that should be available to the operator include manufacturers' literature, publications by professional organizations (e.g., the Water Environment Federation), and EPA publications.

Staffing and Training

Even the best engineered facility cannot perform to its potential without a sufficient number of capable and qualified staff. The inspector must consider the abilities and limitations of the operating staff. Most States have some type of certification program for operators. The inspector may inquire about how many of the staff have been trained and to what degree staff are certified. Staff interviews may include the individual in charge of the overall operation, the chief operator, specific unit process operators, and laboratory staff. The inspector should ascertain the hours the facility is manned and unmanned. If the facility is regularly unmanned, the inspector should inquire about unit alarms, in the event of equipment failure or loss of power, alarm telemerty or autodialers, facility response procedures and whether there have been any unit bypasses as a result of the plant being unmanned.

Table 4-1

Operation and Maintenance Function Evaluation Questions

Policies and Procedures

- Is there a formal or informal set of policies for facility operations?
- Do policies address:
  - Compliance with permit?
  - Maintaining process controls?
  - Quality control?
  - Preventive maintenance?
- Is there a set of standard procedures to implement these policies?
- Are the procedures written or informal?
- Do the procedures consider the following areas?
  - Safety
  - Emergency
  - Laboratory
  - Process control
  - Operating procedures
  - Monitoring
  - Labor relations
  - Energy conservation
  - Treatment chemical supply
  - Collection system
  - Pumping stations
  - Treatment process
  - Sludge disposal
  - Equipment record system
  - Maintenance planning and scheduling
  - Work orders
  - Inventory management
- Are the procedures followed?

Organization

- Is there an Organizational Plan (or Chart) for operations?
- Does the Plan include:
  - Delegation of responsibility and authority
  - Job descriptions
  - Interaction with other functions (such as maintenance)?
- Is the Plan formal or informal?
- Does staff have access to and understand the Plan?
- Does the facility follow the Plan?
- Is the Plan consistent with policies and procedures?
- Is the Plan flexible? Can it handle emergency situations?

Table 4-1

Operations and Maintenance Function Evaluation Questions (Continued)

- Does the Plan clearly define lines of authority and responsibility in the following subfunctional areas?

- Laboratory
- Process control
- Instruments
- Sludge disposal
- Collection system
- Pumping stations
- Monitoring practices
- Mechanical
- Electrical
- Buildings and grounds
- Automotive
- Supplies and spare parts

Staffing

- Is there an adequate number of staff to achieve policies and procedures?
- Are staff members adequately qualified for their duties and responsibilities by demonstrating the following:

  - Certification
  - Qualifications
  - Ability
  - Job performance
  - Understanding of treatment processes

- Is staff used effectively to support plant activities?
- Has the potential for borrowing personnel been considered?
- Are training procedures followed for:

  - Orientation of new staff?
  - Training new operators?
  - Training new supervisors?
  - Continuing training of existing staff?
  - Cross training staff between plant jobs needing more staff/support?

- Which of the following training procedures are used?

  - Formal classroom
  - Home study
  - On-the-job training
  - Participation in professional organization

Table 4-1

Operations and Maintenance Function Evaluation Questions (Continued)

- Does the training program provide specific instruction for the following operations and maintenance activities?

  - Safety
  - Laboratory procedures
  - Treatment processes
  - Instrumentation
  - Equipment troubleshooting
  - Handling personnel problems
  - Monitoring practices
  - Emergency procedures
  - Mechanical
  - Electrical
  - Automotive
  - Building maintenance
  - Inventory control

- Does management encourage staff motivation?

- Does management support its first-line supervisors?

- Is staff motivation maintained through any of the following tools?

  - Encouragement for training
  - Job recognition
  - Promotional opportunities
  - Salary incentives
  - Job security
  - Working environment

Operations

- How does the facility establish operating schedules?

- Do schedules attempt to attain optimum staff utilization?

- Are line supervisors included in manpower scheduling?

- Are staff involved in and/or informed of manpower planning?

- Is there sufficient long-term planning for staff replacement and system changes?

- Are there procedures in manpower staffing for emergency situations?

- How are process control changes initiated?

- How do process control changes interact with management controls?

- How are laboratory results used in process control?

- Are there emergency plans for treatment control?

- Is there an effective energy management plan? Is the plan used?

- To what extent are operations personnel involved in the budget process?

Table 4-1

Operations and Maintenance Function Evaluation Questions (Continued)

- Do budgets adequately identify and justify the cost components of operations?
- Are future budgets based on current and anticipated operating conditions?
- Do operating and capital budget limits constrain operations?
- Can budget line items be adjusted to reflect actual operating conditions?

Maintenance

- Are maintenance activities planned? Is the planning formal or informal?
- Does the facility have sufficient management controls to affect realistic planning and scheduling? If the controls exist, are they used?
- Are operating variables exploited to simplify maintenance efforts?
- To what extent are the supply and spare part inventories planned in conjunction with maintenance activities?
- Have minimum and maximum levels been established for all inventory items?
- Does the facility have a maintenance emergency plan?
- Is the maintenance emergency plan current? Is the staff knowledgeable about emergency procedures?
- Does a plan exist for returning to the preventive maintenance mode following an emergency?
- Are preventive maintenance tasks scheduled in accordance with manufacturers' recommendations?
- Is adequate time allowed for corrective maintenance?
- Are basic maintenance practices (preventive and corrective) and frequencies reviewed for cost-effectiveness?
- Do the management controls provide sufficient information for accurate budget preparation?
- Does the maintenance department receive feedback on cost performance to facilitate future budget preparation?
- To what extent are maintenance personnel involved in the budget process?

Table 4-1

Operations and Maintenance Function Evaluation Questions (Continued)

- Do budgets adequately identify and justify the cost components of maintenance?
- Are future budgets based on current and anticipated operating and maintenance conditions?
- Do maintenance and capital budget limits constrain preventive maintenance (equipment replacement and improvements)?
- Does the maintenance department receive adequate feedback on cost performance?
- Can budget line items be adjusted to reflect actual maintenance conditions?

Management Controls

- Are current versions of the following documents maintained?

  - Operating reports
  - Work schedules
  - Activity reports
  - Performance reports (labor, supplies, energy)
  - Expenditure reports (labor, supplies, energy)
  - Cost analysis reports
  - Emergency and complaint calls
  - Process control data, including effluent quality

- Do the reports contain sufficient information to support their intended purpose?
- Are the reports usable and accepted by the staff?
- Are the reports being completed as required?
- Are the reports consistent among themselves?
- Are the reports used directly in process control?
- Are the reports reviewed and discussed with operating staff?
- What type of summary reports are required?
- To whom are reports distributed and when?

Table 4-1

Operations and Maintenance Function Evaluation Questions (Continued)

Management Controls (Maintenance)

- Does a maintenance record system exist? Does it include the following?

  - As-built drawings
  - Shop drawings
  - Construction specifications
  - Capital and equipment inventory
  - Maintenance history (preventive and corrective)
  - Maintenance costs
  - Equipment manuals

- Does the facility keep a current base record system kept current as part of daily maintenance practices?

- Does the facility have a work order system for scheduling maintenance? Is it explicit or implicit?

- Which of the following do work orders contain?

  - Date

  - Location

  - Work requirements

  - Assigned personnel

  - Work order number

  - Nature of problem

  - Time requirements

  - Space for reporting work performed, required parts and supplies, time required, and cost summary

  - Responsible staff member and supervisory signature requirements

- When emergency work must be performed without a work order, is one completed afterward?

- Are work orders usable and acceptable by staff as essential to the maintenance program? Are they actually completed?

- Is work order information transferred to a maintenance record system?

- Does a catalog or index system exist for controlling items in inventory?

- Are withdrawal tickets used for obtaining supplies from inventory?

Table 4-1

Operations and Maintenance Function Evaluation Questions (Continued)

- Do the tickets contain cost information and interact well with inventory controls and the work order system?
- Is the cost and activity information from work orders aggregated to provide management reports? Is this information also used for budget preparation?
- Is the maintenance performance discussed regularly with staff?
- How is the cost of contract maintenance or the use of specialized assistance recorded?
- Are safeguards and penalties adequate to prevent maintenance cards from being returned without the work being done?
- Is the preventive maintenance record checked after an emergency equipment failure?

Health and Safety

At all times, the facility should follow safe operating procedures. Employees must be trained in emergency shut-down, fire control, and spill response procedures, as well as in the use of safety equipment, safe sampling techniques, and safe handling of chemicals and wastes. Employees should not enter confined spaces unless properly trained and equipped. Managers must be aware of the Occupational Safety and Health Administration (OSHA) Right-to-Know laws regarding potentially dangerous chemicals in the workplace. This law specifically requires a written hazard communication program, labeling of chemicals, and the availability of material safety data sheets to employees upon request.

Management Controls

Monitoring practices are a good indicator of both the emphasis placed on operations and the operator's understanding of process controls. Factors affecting a facility's monitoring capabilities are:

- The sampling program
- Performance testing
- Analytical capabilities
- Recordkeeping practices.

An effective process control program is essential to a treatment facility's optimal performance. However, process control cannot be easily quantified by the inspector. In most cases, the inspector must rely on discussions with the plant superintendent and/or operators to supplement available records and the technical evaluation. The key considerations for effective process controls are:

- Process control data
- Process knowledge of the operators
- The basis for the control practices
- Implementation of the control practices

- Past performance
- Operator emphasis on controls
- Recordkeeping.

Maintenance Evaluation

Facility maintenance directly affects the ability of the facility to run efficiently and to comply with its NPDES permit. The two types of facility maintenance are preventive maintenance and corrective maintenance:

- Preventive maintenance
  - Reduces facility operating costs by eliminating breakdowns and the need for corrective maintenance
  - Improves the facility's reliability by minimizing the time equipment is out of service
  - Increases the useful life of equipment, thus avoiding costly premature replacement
  - Avoids possible compliance violations.
- Corrective maintenance
  - Returns malfunctioning equipment to operation
  - Avoids or minimizes possible violations.

Evaluation of the maintenance function must focus on the ability to maintain process equipment, supply of treatment chemicals, vehicles, and building and grounds. Although each of the five evaluation topics (policies and procedures, organization, staffing, planning, and management controls) must be covered for each facility inspected, the principal areas of concern in the operations evaluation are the same in the maintenance function:

- Staffing and training
- Planning and scheduling
- Management control—records systems and inventory control.

Only well-trained, competent plant staff can be expected to perform adequate physical inspections, repairs, and preventive maintenance. Wastewater facility maintenance is complex and requires a variety of skills. An ongoing training program is essential because many of these skills are not readily available.

Maintenance planning and scheduling are essential to effective corrective and preventive maintenance. The maintenance supervisor must prepare work schedules listing job priorities, work assignments, available personnel, and timing.

A detailed records system is the basis of any maintenance program. Records are used to establish maintenance histories on equipment, diagnose problems, and anticipate—and thereby avoid—equipment failure, making records an effective tool for preventive maintenance.

A central inventory of spare parts, equipment, and supplies must be maintained and controlled. The basis for the inventory should be the equipment manufacturer's recommendations, supplemented by specific, historical experience with maintenance problems and requirements. Inventoried supplies must be kept at levels sufficient to avoid process interruptions.

A maintenance cost control system should be an integral part of every wastewater facility. Budgets must be developed from past cost records and usually are categorized according to preventive maintenance, corrective maintenance, and projected and actual major repair requirements. Annual costs must be compared to the budget periodically to control maintenance expenditures. Evaluating costs this way serves to control expenditures and provides a baseline for future budgets.

The basic concerns that need to be addressed and evaluated during the inspector's maintenance program review are presented in Table 4-1. These questions may help identify the causes of a facility's operation and maintenance problems.

4. D. References and Facility Site Review Checklist

References

U.S. Environmental Protection Agency. 1973. *Maintenance Management Systems for Municipal Wastewater Facilities*. EPA 430/9-74-004.

U.S. Environmental Protection Agency. 1978. *Field Manual for Performance Evaluation and Troubleshooting at Municipal Wastewater Treatment Facilities*. MO No. 16, EPA 430/9-78-001.

U.S. Environmental Protection Agency. 1979. *Inspector's Guide for Evaluation of Municipal Wastewater Treatment Plants*. EPA 430/9-79-010.

U.S. Environmental Protection Agency. 1982. *Comprehensive Diagnostic Evaluation and Selected Management Issues*. EPA 430/9-82-003.

U.S. Environmental Protection Agency. September 1999. *Wastewater Technology Fact Sheet Ozone Disinfection*. EPA 832-F-99-063.

U.S. Environmental Protection Agency. September 1999. *Wastewater Technology Fact Sheet Ultravioldet Disinfection*. EPA 832-F-99-064.

U.S. Environmental Protection Agency. September 2000. *Biosolids Technology Fact Sheet Centrifuge Thickening and Dewatering*. EPA 832-F-00-053.

U.S. Environmental Protection Agency. September 2000. *Biosolids Technology Fact Sheet Belt Filter Press*. EPA 832-F-00-057.

U.S. Environmental Protection Agency. September 2000. *Decentralized Systems Technology Fact Sheet Aerobic Treatment*. EPA 832-F-00-031.

U.S. Environmental Protection Agency. September 2000. *Decentralized Systems Technology Fact Sheet* Evapotranspiration. EPA 832-F-00-033.

U.S. Environmental Protection Agency. September 2000. *Guide for Evaluating Capacity, Management, Operation, and Maintenance Programs at Wastewater Treatment Plants*. EPA 300-B-00-015.

U.S. Environmental Protection Agency. September 2000. *Wastewater Technology Fact Sheet Ammonia Stripping*. EPA 832-F-00-019.

U.S. Environmental Protection Agency. September 2000. *Wastewater Technology Fact Sheet Chemical Precipitation*. EPA 832-F-00-018.

U.S. Environmental Protection Agency. September 2000. *Wastewater Technology Fact Sheet*

Dechlorination. EPA 832-F-00-022.

U.S. Environmental Protection Agency. September 2000. *Wastewater Technology Fact Sheet Force Main Sewers*. EPA 832-F-00-071.

U.S. Environmental Protection Agency. September 2000. *Wastewater Technology Fact Sheet Granular Activated Carbon Adsorption and Regeneration*. EPA 832-F-00-017.

Water Environment Federation (WEF). 1992. *Wastewater Treatment Plant Design*. MOP No. 8, WEF, 1992.

Water Pollution Control Federation (WPCF). 1990. *Operation of Wastewater Treatment Plants*. MOP No. 11, WPCF, 1990.

FACILITY SITE REVIEW CHECKLIST

A. OPERATION AND MAINTENANCE EVALUATION

Yes No N/A	1. Facility properly operates and maintains treatment units
Yes No N/A	2. Facility has standby power or other equivalent provision.
Yes No N/A	3. Adequate alarm system for power or equipment failures is available.
Yes No N/A Yes No N/A	4. Sludge disposal procedures are appropriate: a. Disposal of sludge according to regulations b. State approval for sludge disposal received.
Yes No N/A	5. All treatment units, other than backup units, are in service.
Yes No N/A	6. Facility follows procedures for facility operation and maintenance.
Yes No N/A	7. Sufficient sludge is disposed of to maintain treatment process equilibrium.
Yes No N/A	8. Organizational Plan (chart) for operation and maintenance is provided.
Yes No N/A	9. Plan establishes operating schedules.
Yes No N/A	10. Facility has written emergency plan for treatment control.
Yes No N/A Yes No N/A Yes No N/A Yes No N/A Yes No N/A Yes No N/A Yes No N/A	11. Maintenance record system exists and includes: a. As-built drawings b. Shop drawings c. Construction specifications d. Maintenance history e. Maintenance costs f. Repair history g. Records of equipment repair and timely return to service.
Yes No N/A	12. Adequate number of qualified operators on-hand.
Yes No N/A	13. Facility has established procedures for training new operators.
Yes No N/A	14. Facility maintains adequate spare parts and supplies inventory.
Yes No N/A	15. Facility keeps instruction files for operation and maintenance of each item of major equipment.
Yes No N/A	16. Operation and maintenance manual is available.
Yes No N/A	17. Regulatory agency is notified of any bypassing. (Dates _____)
Yes No N/A Yes No N/A Yes No N/A Yes No N/A Yes No N/A Yes No N/A	18. a. Hydraulic overflows and/or organic overloads are experienced. b. Untreated bypass discharge occurs during power failure. c. Untreated overflows occurred since last inspection. Reason: _____ d. Flows were observed in overflow or bypass channels. e. Checking for overflows is performed routinely. f. Overflows are reported to EPA or to the appropriate State agency as specified in the permit.

FACILITY SITE REVIEW CHECKLIST
(Continued)

B. SAFETY EVALUATION

Yes No N/A	1. Facility uses undiked/unbermed oil/chemical storage tanks.
Yes No N/A	2. Facility maintains up-to-date equipment repair records.
Yes No N/A	3. Dated tags show out-of-service equipment a. Proper facility/unit lock-out and tag-out procedures are being followed.
Yes No N/A	4. Facility schedules/performs routine and preventive maintenance on time.
Yes No N/A	5. Facility provides personal protective clothing (safety helmets, ear protectors, goggles, gloves, rubber boots with steel toes, eye washes in labs).
Yes No N/A Yes No N/A Yes No N/A Yes No N/A Yes No N/A Yes No N/A Yes No N/A Yes No N/A Yes No N/A Yes No N/A Yes No N/A	6. Safety devices are readily available: a. Fire extinguishers b. Oxygen deficiency/explosive gas indicator c. Self-contained breathing apparatus near entrance to chlorine room d. Safety harness e. First aid kits f. Ladders to enter manholes or wetwells (fiberglass or wooden for electrical work) g. Traffic control cones h. Safety buoy at activated sludge plants i. Life preservers for lagoons j. Fiberglass or wooden ladder for electrical work k. Portable crane/hoist.
Yes No N/A	7. Plant has general safety structures such as rails around or covers over tanks, pits, or wells.
Yes No N/A	8. Emergency phone numbers are listed, including EPA and State.
Yes No N/A	9. Plant is generally clean, free from open trash areas.
Yes No N/A	10. Facility has available portable hoists, for equipment removal.
Yes No N/A	11. All plant personnel are immunized for typhoid, tetanus, and hepatitis B.
Yes No N/A	12. No cross connections exist between a potable water supply and nonpotable source.
Yes No N/A	13. Gas/explosion controls such as pressure-vacuum relief values, no smoking signs, explosimeters, and drip traps are present near anaerobic digesters, enclosed screening or degritting chambers, and sludge-piping or gas-piping structures.
Yes No N/A	14. Facility has enclosed and identified all electrical circuitry.

FACILITY SITE REVIEW CHECKLIST
(Continued)

B. SAFETY EVALUATION (Continued)

Yes No N/A	15. Personnel are trained in electrical work to be performed as well as safety procedures.
	16. Chlorine safety precautions are followed:
Yes No N/A	a. NIOSH-approved 30-minute air pack
Yes No N/A	b. All standing chlorine cylinders chained in place
Yes No N/A	c. All personnel trained in the use of chlorine
Yes No N/A	d. Chlorine repair kit available
Yes No N/A	e. Chlorine leak detector tied into plant alarm system
Yes No N/A	f. Chlorine cylinders stored in adequately ventilated areas?
Yes No N/A	g. Ventilation fan with an outside switch
Yes No N/A	h. Posted safety precautions
Yes No N/A	i. Existing emergency SOP and/or RMP or SPCC?
Yes No N/A	17. Facility has complied with the six employer responsibilities for the Worker Right-to-Know Law (P.A. 83-240)
Yes No N/A	18. Emergency Action Plan on file with local fire department and appropriate emergency agency.
Yes No N/A	19. Laboratory safety devices (eyewash and shower, fume hood, proper labeling and storage, pipette suction bulbs) available.
Yes No N/A	20. Facility post warning signs (no smoking, high voltage, non potable water, chlorine hazard, watch-your-step, and exit).

Figure 4-1

General Wastewater Treatment Flow Diagram

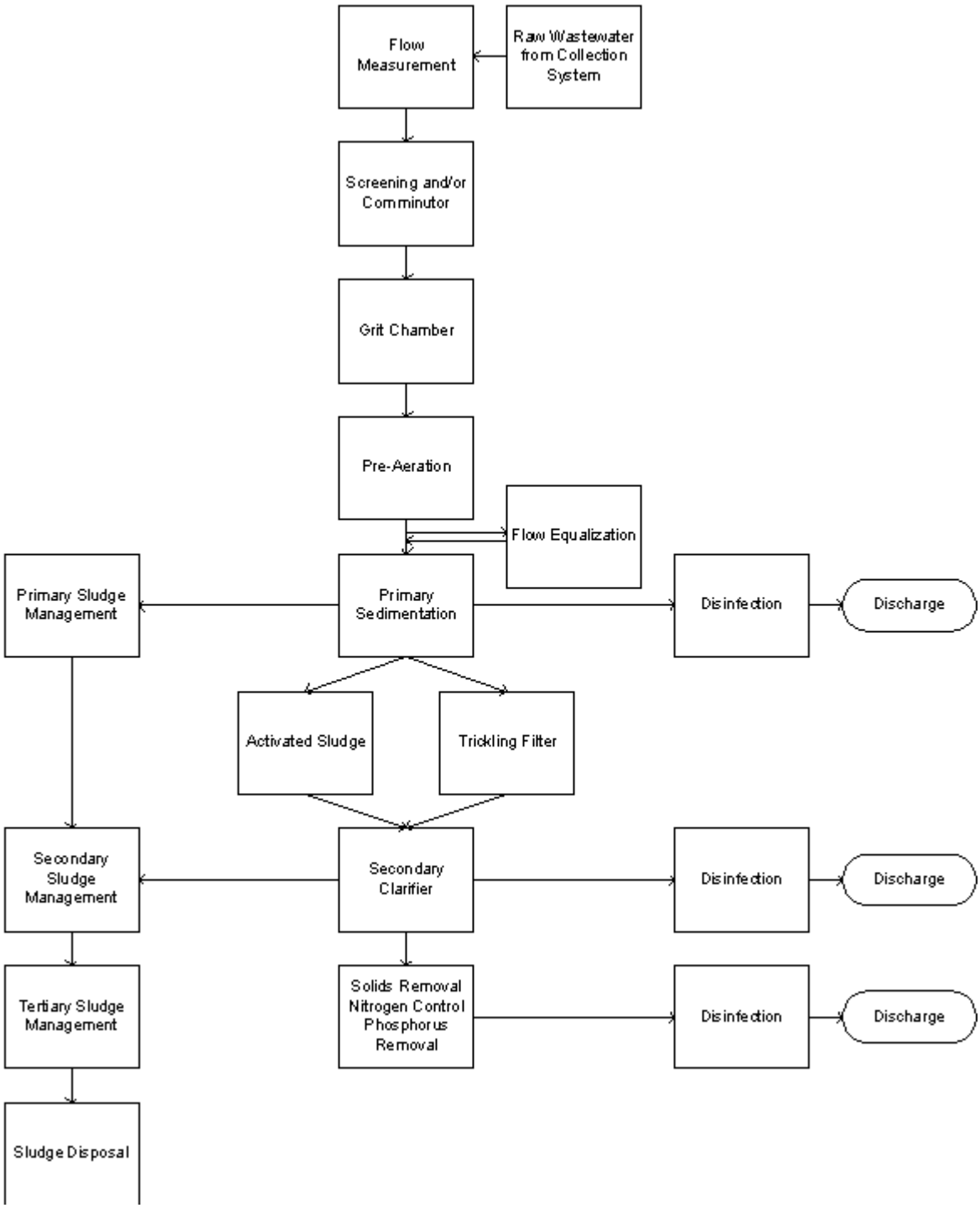

5. SAMPLING

Contents Page

A. Evaluation of Permittee Sampling Program and Compliance Sampling 5-1
Objectives and Requirements 5-1
Significant Industrial User Monitoring Program 5-2
Biosolids Monitoring Program 5-2
Toxicity Testing Program 5-2
Storm Water Program 5-2

B. Sampling Procedures and Techniques 5-3
Wastewater Sample Collection Techniques 5-3
EPA Sample Identification Methods 5-16
Wastewater Sample Preservation and Holding Time 5-16
Transfer of Custody and Shipment of Samples 5-17
Quality Control 5-18
Quality Assurance Project Plan 5-24
Data Handling and Reporting 5-24

C. References and Permittee Sampling Inspection Checklist 5-25
References 5-25
Permittee Sampling Inspection Checklist 5-27

D. Digitized Video Clip - CD-Rom . . . . . (CD-Rom Insert in binder)

List of Tables

5-1. Volume of Sample Required for Determination of the Various Constituents of Industrial Wastewater 5-5
5-2. Compositing Methods 5-8
5-3. Required Containers, Preservation Techniques, and Holding Times 5-11
5-4. Quality Control Procedures for Field Analysis and Equipment 5-20

Associated Appendices

L. Approved Methods for the Analysis of Sewage Sludge (40 *CFR* Part 503)
M. Example Chain-of-Custody Form
N. Updated Fact Sheet: Department of Transportation Hazardous Materials Training

Related Websites

Agency-wide Quality System Documents: http://www.epa.gov/quality/qa_docs.html

This page intentionally left blank.

5. A. Evaluation of Permittee Sampling Program and Compliance Sampling

Wastewater sampling/analysis is an integral part of the National Pollutant Discharge Elimination System (NPDES) Compliance Monitoring Program. NPDES permits contain specific and legally enforceable effluent limitations and monitoring requirements.

Objectives and Requirements

When evaluating the permittee sampling program, the inspector should:

- Verify that the permittee's sampling program complies with the permit

- Verify that the permittee's sampling program complies with:
  - 40 *Code of Federal Regulations (CFR)* 136.1 to 136.5 and Appendices A, B, and C (Guidelines for Establishing Test Procedures for the Analysis of Pollutants) for wastewater samples and
  - 40 *CFR* Part 503 which requires that for biosolids samples, metal analyses be done in accordance with SW-846 methods (in Test Methods for Evaluating Solid Waste Physical/Chemical Methods) and Standard Methods for the Examination of Water and Wastewater.

- Document violations to support enforcement action.

In addition, specific objectives of the sampling conducted by inspectors include the following:

- Verify compliance with effluent limitations
- Verify accuracy of reports and program self-monitoring
- Support enforcement action
- Support permit development reissuance and/or revision
- Determine the quantity and quality of effluent.

Sampling, analysis, preservation technique, sample holding time, and sample container requirements are provided under 40 *CFR* Part 136 as authorized by Section 304(h) of the Clean Water Act (CWA). Chapter Seven contains more information on required analytical procedures "Laboratory Analyses Techniques Evaluation." See the checklist for use in evaluating the permittee's sampling program at the end of this chapter.

For all NPDES permittees the inspector should include a review of sampling procedures and quality control measures the facility uses to ensure the integrity of sample data.

To evaluate sampling procedures, assess the following seven areas:

- Sample collection techniques

- Field measurements
- Sample labeling (including location(s)) and documentation
- Sample preservation and holding time
- Transfer of custody and shipment of samples
- Quality control
- Data handling and reporting.

Significant Industrial User Monitoring Program

It is the responsibility of the permitted Publicly Owned Treatment Works (POTW) with a pretreatment program to oversee sampling procedures of industrial users and to conduct compliance monitoring of its own. Therefore, during a Pretreatment Compliance Inspection (PCI) or audit, the inspector may also need to evaluate POTW sampling procedures for significant industrial users who discharge to the POTW in addition to evaluating the sampling procedures of any permitted POTW. According to the General Pretreatment Regulations, 40 *CFR* 403.12(o), industrial users and POTWs subject to 40 *CFR* 403.12 reporting requirements must maintain the following monitoring records:

- Date, exact place, method and time of sampling, and name of sampler
- Date of analysis
- Name of analyst
- Analytical techniques/methods used
- Analytical results.

During a PCI or an audit, the inspector evaluates the POTW industrial user monitoring program with respect to the criteria specified in the POTW pretreatment program. Elements of the sampling scheme will include the seven areas addressed above and any other areas specifically addressed in the particular pretreatment program. Chapter Nine, "Pretreatment," discusses the focus of this evaluation in greater detail.

Biosolids Monitoring Program

Chapter Ten discusses evaluation of a permittee's biosolids monitoring program. In addition, Appendix L lists approved analytical methods, sample containers, preservation techniques, and holding times for biosolids samples.

Toxicity Testing Program

Chapter Eight discusses evaluation of a permittee's whole effluent toxicity testing program. In addition, for methods manuals for Whole Effluent Toxicity testing go to http://www.epa.gov/owm, as well as http://www.epa.gov/waterscience/WET.

Storm Water Program

Chapter Eleven provides considerations for performing storm water sampling.

5. B. Sampling Procedures and Techniques

Whether an inspector is evaluating a permittee's sampling program or conducting compliance sampling on the permittee's effluent, that inspector must be familiar with the procedures and techniques necessary for accurate sampling of wastewaters. The following discussion details the procedures for sample collection, preservation, transfer, quality control, and data handling.

Wastewater Sample Collection Techniques

Sample collection is an important part of the compliance monitoring program. Without proper sample collection procedures, the results of such monitoring programs are neither useful nor valid, even with the most precise and accurate analytical measurements.

Selection of Representative Sampling Sites

Normally, samples should be collected at the location specified in the permit. In some instances, the sampling location specified in the permit or the location chosen by the permittee may not be adequate for the collection of a representative sample. In that case, the inspector should determine the most representative sampling point available and collect a sample at both locations. If the facility disagrees the reason for the conflict must be documented for later resolution by the permitting authority.

Influent Samples. Document and take these samples at points of high turbulence flow to ensure good mixing. In some instances, the most desirable location may not be accessible. Ensure sampling equipment sampling points are above plant return lines, and sampling equipment should be placed so that it does not interfere with flow measuring devices. The preferred sampling points for raw wastewater are:

- Waste flowing from last process in a manufacturing operation
- Pump wet well (if turbulent)
- Upstream collection lines, tank, or distribution box following pumping from the wet well or sump
- Flume throat
- Aerated grit chamber
- Upstream siphon following the comminutor (in absence of grit chamber).

If it is not possible to sample at a preferred point, choose an alternative location and document the basis for choosing that location.

Effluent Samples. Collect these samples at the site the permit specifies or, if the permit does not specify a site then the inspector should select the most representative site after final treatment and downstream from all entering wastestreams before they enter the receiving waters. Occasionally, municipal plant permits may specify sampling prior to chlorination. For these plants, monitor all parameters at the upstream location except fecal coliforms, pH, and total residual chlorine. Collect wastewater for use in bioassays at the location specified in the facility's NPDES permit.

Collect samples either manually (grab or composite) or with automatic samplers (continuous or composite). The following general guidelines apply when taking samples:

- Take samples at a site specified in the NPDES permit and/or at a site selected to yield a representative sample.
- Use a sampling method (grab, composite, continuous) as required in the permit. Some parameters that are not to be collected by automatic samplers, but must be hand collected are dissolved oxygen, total residual chlorine, oil and grease, coliforms, purgeable organics, sulfides, cyanide, and total phenols.
- Avoid collecting large nonhomogeneous particles and objects.
- Collect the sample facing upstream to avoid contamination.
- Do not rinse sample container with sample when collecting oil and grease and microbiological samples, but fill it directly to within 2.5 to 5 cm from the top.
- Fill the container completely if the sample is to be analyzed for purgeable organics, oxygen, ammonia, hydrogen sulfide, free chlorine, pH, hardness, sulfite, ammonium, ferrous iron, acidity, or alkalinity.
- Collect sufficient volume to allow for quality assurance testing. (Table 5-1 provides a guide to numerous sample volumes, but additional volumes may be necessary for quality assurance testing.)

The following general guidelines apply when using automatic samplers:

- Collect samples where the wastewater is well mixed. Collect the sample near the center of the flow channel at 0.4 to 0.6 depth (mid-depth).
- Obtain a sufficient volume of sample to perform all required analyses plus any additional amount for quality control. Individual portions of a composite sample should be at least 100 milliliters in order to minimize sampler solids bias.
- For automatic samplers which use a peristaltic pump, obtain adequate flow rates in the sampler tubing to effectively transport the suspended solids. To avoid solids bias, the velocity of the wastewater in sample tubing should be at least 2 fps and the tubing diameter should be at least 0.25 inch.
- Time of sample collection begins when the last aliquot is dispensed into the composite sample container.

Table 5-1

Volume of Sample Required for Determination of the Various Constituents of Industrial Wastewater (Associated Water and Air Resource Engineers, Inc. 1973 *Handbook for Monitoring Industrial Wastewater*. USEPA Technology Transfer.)

Tests	Volume of Sample, (1) ml
PHYSICAL	
Color and Odor(2)	100 to 500
Corrosivity(2)	Flowing sample
Electrical conductivity(2)	100
pH, electrometric(2)	100
Radioactivity	100 to 1,000
Specific gravity(2)	100
Temperature(2)	Flowing sample
Toxicity(2)	1,000 to 20,000
Turbidity(2)	100 to 1,000
CHEMICAL	
Dissolved Gases:	
Ammonia,(3) NH(3)	500
Carbon dioxide,(3) free $C0_2$	200
Chlorine,(3) free Cl_2	200
Hydrogen,(3) H_2	1,000
Hydrogen sulfide,(3) H_2S	500
Oxygen,(3) O_2	500 to 1,000
Sulfur dioxide,(3) free SO_2	100
Miscellaneous:	
Acidity and alkalinity	100
Bacteria, iron	500
Bacteria, sulfate-reducing	100
Biochemical oxygen demand (BOD)	100 to 500
Carbon dioxide, total $C0_2$ (including $C0_3^{--}$, $HC0_3^{-}$, and free)	200
Chemical oxygen demand (dichromate)	50 to 100
Chlorine requirement	2,000 to 4,000
Chlorine, total residual Cl_2 (including OCl^{-}, HOCl, NH_2Cl, $NHCl_2$, and free)	200
Chloroform-extractable matter	1,000
Detergents	100 to 200
Hardness	50 to 100
Hydrazine	50 to 100
Microorganisms	100 to 200
Volatile and filming amines	500 to 1,000
Oily matter	3,000 to 5,000
Organic nitrogen	500 to 1,000
Phenolic compounds	800 to 4,000
pH, colorimetric	10 to 20
Polyphosphates	100 to 200
Silica	50 to 1,000
Solids, dissolved	100 to 20,000
Solids, suspended	50 to 1,000
Tannin and lignin	100 to 200

Table 5-1

Volume of Sample Required for Determination of the Various Constituents of Industrial Wastewater (Continued)

Tests	Volume of Sample, (1) ml
Cations:	
Aluminum, Al^{+++}	100 to 1,000
Ammonium,(3) $NH4^{+}$	500
Antimony, Sb^{+++} to Sb^{+++++}	100 to 1,000
Arsenic, As^{+++} to As^{+++++}	100 to 1,000
Barium, Ba^{++}	100 to 1,000
Cadmium, Cd^{++}	100 to 1,000
Calcium, Ca^{++}	100 to 1,000
Chromium, Cr^{+++} to Cr^{++++++}	100 to 1,000
Copper, Cu^{++}	200 to 4,000
Iron,(3) Fe^{++} and Fe^{+++}	100 to 1,000
Lead, Pb^{++}	100 to 4,000
Magnesium, Mg^{++}	100 to 1,000
Manganese, Mn^{++} to $Mn^{+++++++}$	100 to 1,000
Mercury, Hg^{+} and Hg^{++}	100 to 1,000
Potassium, K^{+}	100 to 1,000
Nickel, Ni^{++}	100 to 1,000
Silver, Ag^{+}	100 to 1,000
Sodium, Na^{+}	100 to 1,000
Strontium, Sr^{++}	100 to 1,000
Tin, Sn^{++} and Sn^{++++}	100 to 1,000
Zinc, Zn^{++}	100 to 1,000
Anions:	
Bicarbonate, HCO_3^{-}	100 to 200
Bromide, Br^{-}	100
Carbonate, CO_3^{--}	100 to 200
Chloride, Cl^{--}	25 to 100
Cyanide, CN^{-}	25 to 100
Fluoride, Fl^{-}	200
Hydroxide, OH^{-}	50 to 100
Iodide, I^{-}	100
Nitrate, NO_3^{-}	10 to 100
Nitrite, NO_2^{--}	50 to 100
Phosphate, ortho, PO_4^{--}, HPO_4^{--}, $H_2PO_4^{-}$	50 to 100
Sulfate, SO_4^{--}, HSO_4	100 to 1,000
Sulfide, S^{--}, HS^{-}	100 to 500
Sulfite, SO_3^{--}, HSO_3^{-}	50 to 100

(1) Consider volumes specified in this table as guides for the approximate quantity of sample necessary for a particular analysis. The exact quantity used should be consistent with the volume prescribed in the standard method of analysis, whenever a volume is specified.
(2) Use aliquots for other determinations.
(3) Obtain samples for unstable constituents in separate containers, preserved as prescribed; containers must be completely filled and sealed against air exposure.

Sample Types

Two types of sample techniques are used: grab and composite. For many monitoring procedures, 40 *CFR* Part 136 does not specify sampling type. For these procedures, the NPDES permit writer determines the appropriate sample type and specifies them in the NPDES permit.

Grab Samples. Grab samples are individual samples collected over a period of time not exceeding 15 minutes and are representative of conditions at the time the sample is collected. The sample volume depends on the type and number of analyses to be performed. The collection of a grab sample is appropriate when a sample is needed to:

- Sample an effluent that does not discharge on a continuous basis
- Provide information about instantaneous concentrations of pollutants at a specific time
- Allow collection of a variable sample volume
- Corroborate composite samples
- Monitor parameters not amenable to compositing (e.g., pH, temperature, dissolved oxygen, chlorine, purgeable organics, oil and grease, coliform bacteria, and others specified by the NPDES permit, which may include phenols, sulfites, and hexavalent chromium). Volatile organics, sulfides, phenols, and phosphorus samples can be composited. If you composite use special handling procedures.

Composite Samples. Collect these samples over time, either by continuous sampling or by mixing discrete samples, and represent the average characteristics of the wastestream during the compositing period use. Composite samples are used when stipulated in a permit and when:

- Average pollutant concentration during the compositing period is determined
- Mass per unit time loadings is calculated
- Wastewater characteristics are highly variable.

Various methods for compositing samples are available, select one based on either time or flow proportioning. Table 5-2 lists the advantages and disadvantages of various methods. The permit may specify which type of composite sample to use. Collect composite samples either manually or with automatic samplers. Inspectors should consider variability in wastestream flow rate and parameter concentrations carefully when choosing compositing methods, sampling equipment (tubing and containers), and quality assurance procedures. The compositing methods are as follows:

- Time Composite Sample—This method requires discrete sample aliquots collected in one container at constant time intervals. This method is appropriate when the flow of the sampled stream is constant (flow rate does not vary more than ±10 percent of the average flow rate) or when flow monitoring equipment is not available.

Table 5-2

Compositing Methods

Method	Advantages	Disadvantages	Comments
Time Composite			
Constant sample volume, constant time interval between samples	Minimal instrumentation and manual effort; requires no flow measurement	May lack representativeness, especially for highly variable flows	Widely used in both automatic samplers and manual handling
Flow-Proportional Composite			
Constant sample volume, time interval between samples proportional to stream flow	Minimal manual effort	Requires accurate flow measurement reading equipment; manual compositing from flowchart	Widely used in automatic as well as manual sampling
Constant time interval between samples, sample volume proportional to total stream flow at time of sampling	Minimal instrumentation	Manual compositing from flowchart in absence of prior information on the ratio of minimum to maximum flow; chance of collecting too small or too large individual discrete samples for a given composite volume	Used in automatic samplers and widely used as manual method
Constant time interval between samples, sample volume proportional to total stream flow since last sample	Minimal instrumentation	Manual compositing from flow chart in absence of prior information on the ratio of minimum to maximum flow; chance of collecting either too small or too large individual discrete samples for a given composite volume	Not widely used in automatic samplers but may be done manually
Sequential Composite			
Series of short period composites, constant time intervals between samples	Useful if fluctuations occur and time history is desired	Requires manual compositing of aliquots based on flow	Commonly used; however, manual compositing is labor intensive
Series of short period composites, aliquots taken at constant discharge increments	Useful if fluctuations occur and the time history is desired	Requires flow totalizer; requires manual compositing of aliquots based on flow	Manual compositing is labor intensive
Continuous Composite			
Constant sample volume	Minimal manual effort, requires no flow measurement highly variable flows	Requires large sample capacity; may lack representativeness for highly variable flows	Practical but not widely used
Sample volume proportional to stream flow	Minimal manual effort, most representative especially for highly variable sample volume, variable pumping capacity and power	Requires accurate flow measurement equipment, large sample volume, variable pumping capacity, and power	Not widely used

- Flow-Proportional Composite Sample—There are two methods used for this type of sample. One method collects a constant sample volume at varying time intervals proportional to stream flow (e.g., 200 milliliters sample collected for every 5,000 gallons of flow). In the other method, collect the sample by increasing the volume of each aliquot as the flow increases, while maintaining a constant time interval between the aliquots.

- Sequential Composite Sample—This method requires discrete samples collected in individual containers at constant time intervals or discharge increments—for example, samples collected every 15 minutes, composited into separate containers each hour. The discrete samples can then be manually flow-proportioned to form the composite sample. Alternatively, take a constant sample volume at constant discharge increments, as measured with a totalizer.

- Continuous Composite Sample— Collect this sample continuously from the wastestream. The sample may be constant volume, or the volume may vary in proportion to the flow rate of the wastestream.

Sample Volume

The volume of samples collected depends on the type and number of analyses needed, as reflected in the parameters to be measured. Obtain the volume of the sample sufficient for all the required analyses plus an additional amount to provide for any split samples or repeat analyses. Table 5-1 provides a guide to sample volumes required for determining the constituents in wastewater. Consult the laboratory receiving the sample for any specific volume required. EPA's *Methods for Chemical Analysis of Water and Wastes* (USEPA 1979b) and *Handbook for Sampling and Sample Preservation of Water and Wastewater* (USEPA 1982), and the current Environmental Protection Agency (EPA)-approved edition of *Standard Methods for the Examination of Water and Wastewater* [American Public Health Association (APHA), American Water Works Association (AWWA), and Water Environment Federation (WEF)] contain specific recommended minimum sample volumes for different pollutant parameters.

Sample Containers

The 40 *CFR* Part 136 describes required sample containers, sample preservation, and sample holding time. Table 5-3 includes this material. It is essential that the sample containers be made of chemically resistant material unaffected by the concentrations of the pollutants measured. In addition, sample containers must have a closure that will protect the sample from contamination. Collect wastewater samples for chemical analysis in plastic (polyethylene) containers. Exceptions to this general rule are oil and grease samples, pesticides, phenols, polychlorinated biphenyls (PCBs), and other organic pollutant samples. Collect these in properly cleaned glass jars or bottles and sealed. Collect bacteriological samples in properly sterilized plastic or glass containers. Collect samples that contain constituents that will oxidize when exposed to sunlight (such as iron cyanide complexes) in dark containers.

Ensure sample containers are clean and uncontaminated. Check analytical procedures to determine if they specify container cleaning procedures. Use precleaned and sterilized disposable containers (e.g., polyethylene cubitainers). If these are not used or if the analytical method does not specify procedures, use the following procedures for cleaning sample containers:

- Wash with hot water and detergent.
- Rinse with acid (e.g., nitric for metals).
- Rinse with tap water, then rinse three or more times with organic-free water.
- Rinse glass containers with an interference-free, redistilled solvent (such as acetone or methylene chloride for extractable organics).
- Dry in contaminant-free area.

Table 5-3

Required Containers, Preservation Techniques, and Holding Times (Excerpt from 40 *CFR* Part 136, Table II)

Parameter	Container[1]	Preservative[2,3]	Maximum Holding Time[4]
BACTERIAL TESTS			
Coliform, fecal and total	P,G	Cool, 4°C 0.008% $Na_2S_2O_3$[5]	6 hours
Fecal streptococci	P,G	Cool, 4°C 0.008% $Na_2S_2O_3$[5]	6 hours
INORGANIC TESTS			
Acidity	P,G	Cool, 4°C	14 days
Alkalinity	P,G	Cool, 4°C	14 days
Ammonia	P,G	Cool, 4°C H_2SO_4 to pH<2	28 days
Biochemical oxygen demand	P,G	Cool, 4°C	48 hours
Biochemical oxygen demand, carbonaceous	P,G	Cool, 4°C	48 hours
Bromide	P,G	None required	28 days
Chemical oxygen demand	P,G	Cool, 4°C H_2SO_4 to pH<2	28 days
Chloride	P,G	None required	28 days
Chlorine, total residual	P,G	None required	Analyze immediately
Color	P,G	Cool, 4°C	48 hours
Cyanide, total and amenable to chlorination	P,G	Cool, 4°C NaOH to pH>12 0.6 g ascorbic acid[5]	14 days[6]
Fluoride	P	None required	28 days
Hardness	P,G	HNO_3 to pH<2, H_2SO_4 to pH<2	6 months
Hydrogen ion (pH)	P,G	None required	Analyze immediately
Kjeldahl and organic nitrogen	P,G	Cool, 4°C H_2SO_4 to pH<2	28 days
METALS[7]			
Chromium VI	P,G	Cool, 4°C	24 hours
Mercury	P,G	HNO_3 to pH<2	28 days
Metals except above	P,G	HNO_3 to pH<2	6 months

Table 5-3

Required Containers, Preservation Techniques, and Holding Times
(Excerpt from 40 *CFR* Part 136, Table II)
(Continued)

Parameter	Container[1]	Preservative[2,3]	Maximum Holding Time[4]
INORGANIC TESTS (Continued)			
Nitrate	P,G	Cool, 4°C	48 hours
Nitrate-nitrite	P,G	Cool, 4°C H_2SO_4 to pH<2	28 days
Nitrite	P,G	Cool, 4°C	48 hours
Oil and grease	G	Cool, 4°C HCl, H_2SO_4 to pH<2	28 days
Organic carbon	P,G	Cool, 4°C HCl, H_2SO_4 to pH<2	28 days
Orthophosphate phosphorus	P,G	Filter immediately Cool, 4°C	48 hours
Dissolved oxygen Probe Winkler	 G bottle & top G bottle & top	 None required Fix onsite and store in the dark	 Analyze immediately 8 hours
Phenols	G	Cool, 4°C H_2SO_4 to pH<2	28 days
Phosphorus (elemental)	G	Cool, 4°C	48 hours
Phosphorus, total	P,G	Cool, 4°C H_2SO_4 to pH<2	28 days
Residue, total	P,G	Cool, 4°C	7 days
Residue, filterable	P,G	Cool, 4°C	7 days
Residue, nonfilterable (TSS)	P,G	Cool, 4°C	7 days
Residue, settleable	P,G	Cool, 4°C	48 hours
Residue, volatile	P,G	Cool, 4°C	7 days
Silica	P	Cool, 4°C	28 days
Specific conductance	P,G	Cool, 4°C	28 days

Table 5-3

Required Containers, Preservation Techniques, and Holding Times (Excerpt from 40 *CFR* Part 136, Table II) (Continued)

Parameter	Container[1]	Preservative[2,3]	Maximum Holding Time[4]
INORGANIC TESTS (Continued)			
Sulfate	P,G	Cool, 4°C	28 days
Sulfide	P,G	Cool, 4°C, add zinc acetate plus sodium hydroxide to pH >9	7 days
Sulfite	P,G	None required	Analyze immediately
Surfactants	P,G	Cool, 4°C	48 hours
Temperature	P,G	None required	Analyze immediately
Turbidity	P,G	Cool, 4°C	48 hours
ORGANIC TESTS[8]			
Purgeable halocarbons	G, teflon-lined septum	Cool, 4°C 0.008% $Na_2S_2O_3$[5]	14 days
Purgeable aromatic hydrocarbons	G, teflon-lined septum	Cool, 4°C 0.008% $Na_2S_2O_3$[5] HCl to pH 2[9]	14 days
Acrolein and acrylonitrile	G, teflon-lined septum	Cool, 4°C 0.008% $Na_2S_2O_3$[5] Adjust pH to 4-5[10]	14 days
Phenols[11]	G, teflon-lined cap	Cool, 4°C 0.008% $Na_2S_2O_3$[5]	7 days until extraction 40 days after extraction
Benzidenes[11]	G, teflon-lined cap	Cool, 4°C 0.008% $Na_2S_2O_3$[5]	7 days until extraction[13]
Phthalate esters[11]	G, teflon-lined cap	Cool, 4°C	7 days until extraction; 40 days after extraction
Nitrosamines[11,14]	G, teflon-lined cap	Cool, 4°C 0.008% $Na_2S_2O_3$[5] Store in the dark	7 days until extraction; 40 days after extraction
Polychlorinated biphenyls (PCBs)[11]	G, teflon-lined cap	Cool, 4°C	7 days until extraction; 40 days after extraction
Nitroaromatics and isophorone[11]	G, teflon-lined cap	Cool, 4°C 0.008% $Na_2S_2O_3$[5] Store in the dark	7 days until extraction; 40 days after extraction

Table 5-3

Required Containers, Preservation Techniques, and Holding Times (Excerpt from 40 *CFR* Part 136, Table II) (Continued)

Parameter	Container[1]	Preservative[2,3]	Maximum Holding Time[4]
ORGANIC TESTS[8] (Continued)			
Polynuclear aromatic hydrocarbons[11]	G, teflon-lined cap	Cool, 4°C 0.008% $Na_2S_2O_3$[5] Store in the dark	7 days until extraction; 40 days after extraction
Haloethers[11]	G, teflon-lined cap	Cool, 4°C 0.008% $Na_2S_2O_3$[5]	7 days until extraction; 40 days after extraction
Chlorinated hydrocarbons[11]	G, teflon-lined cap	Cool, 4°C	7 days until extraction; 40 days after extraction
2,3,7,8-tetrachlorodibenzo-p-dioxin[11]	G, teflon-lined cap	Cool, 4°C 0.008% $Na_2S_2O_3$[5]	7 days until extraction; 40 days after extraction
PESTICIDES TEST			
Organochlorine pesticides[11]	G, teflon-lined cap	Cool, 4°C pH 5-9[15]	7 days until extraction; 40 days after extraction
RADIOLOGICAL TEST			
Alpha, beta, and radium	P,G	HNO_3 to pH<2	6 months
WHOLE EFFLUENT TOXICITY TESTS			
Acute and Chronic, for NPDES Compliance	P,G	Cool, 0-6°C NO ADDITIONS	36 Hours to test initiation

[1] Polyethylene (P) or glass (G).

[2] Perform sample preservation steps immediately upon sample collection. For composite chemical samples, preserve each aliquot at the time of collection. When use of an automatic sampler makes it impossible to preserve each aliquot, then preserve chemical samples by maintaining at 4°C until compositing and sample splitting are completed.

[3] When shipping any sample by common carrier or sent through the United States mail, comply with the Department of Transportation Hazardous Materials Regulations (49 *CFR* Part 172). See fact sheet in Appendix N. The person offering such material for transportation is responsible for ensuring such compliance. For the preservation requirements of this Table, the Office of Hazardous Materials, Materials Transportation Bureau, Department of Transportation has determined that the Hazardous Materials Regulations do not apply to the following materials: hydrochloric acid (HCl) in water solutions at concentrations of 0.04% by weight or less (pH about 1.96 or greater); nitric acid (HNO_3) in water solutions at concentrations of 0.15% by weight or less (pH about 1.62 or greater); sulfuric acid (H_2SO_4) in water solutions at concentrations of 0.35% by weight or less (pH about 1.15 or greater); and sodium hydroxide (NaOH) in water solutions at concentrations of 0.08% by weight or less (pH about 12.3 or less).

Table 5-3

Required Containers, Preservation Techniques, and Holding Times
(Excerpt from 40 *CFR* Part 136, Table II)
(Continued)

[4] Analyze samples as soon as possible after collection. The times listed are the maximum times that samples may be held before analysis and still be considered valid. Samples may be held for longer periods only if the permittee, or monitoring laboratory, has data on file to show that the specific types of samples under study are stable for the longer time and has received a variance from the Regional Administrator under § 136.3(e). Some samples may not be stable for the maximum time period given in the table. A permittee, or monitoring laboratory, is obligated to hold the sample for a shorter time if knowledge exists to show that this is necessary to maintain sample stability.

[5] Used only in the presence of residual chlorine.

[6] Maximum holding time is 24 hours when sulfide is present. Optionally, test all samples with lead acetate paper before pH adjustments to determine whether sulfide is present. If sulfide is present, remove by the addition of cadmium nitrate powder until a negative spot test is obtained. Filter the sample then NaOH is added to pH 12.

[7] Filter samples should be filtered immediately onsite before adding preservative for dissolved metals.

[8] Guidance applies to samples to be analyzed by GC, LC, or GC/MS for specific organic compounds.

[9] Analyze samples receiving no pH adjustment within 7 days of sampling.

[10] pH adjustment is if not needed if not measuring acrolein. Analyze samples for acrolein receiving no pH adjustment within 3 days of sampling.

[11] When the extractable analytes of concern fall within a single chemical category, observe the specified preservation and maximum holding times for optimum safeguarding of sample integrity. When the analytes of concern fall within two or more chemical categories, preserve the sample by cooling to 4°C, reducing residual chlorine with 0.008% sodium thiosulfate, storing in the dark, and adjusting the pH to between 6 and 9; hold samples preserved in this manner for 7 days before extraction and for 40 days after extraction. Exceptions to this optional preservation and holding time procedure are noted in footnote 5 (re: the requirement for thiosulfate reduction of residual chlorine) and footnotes 12 and 13 (re: the analysis of benzidine).

[12] If 1,2-diphenylhydrazine is likely to be present, adjust the pH of the sample to 4.0 ± 0.2 to prevent rearrangement to benzidine.

[13] Store extracts up to 7 days before analysis if storage is conducted under an inert (oxidant-free) atmosphere.

[14] For the analysis of diphenylnitrosamine, add 0.008% $Na_2S_2O_3$ and adjust pH to between 7 and 10 with NaOH within 24 hours of sampling.

[15] Perform the pH adjustment upon receipt at the laboratory and omit if the samples are extracted within 72 hours of collection. For the analysis of aldrin, add 0.008% $Na_2S_2O_3$.

EPA Sample Identification Methods

Identify each sample accurately and completely. Use labels or tags to identify the samples that are moisture-resistant and able to withstand field conditions. Use a waterproof pen to complete the labels or tags. A numbered label or tag associated with a field sample data sheet containing detailed information on the sample is preferable to using only a label or tag for information[1]. The information for each sample should include the following:

- Facility name/location
- Sample site location
- Sample number
- Name of sample collector
- Date and time of collection
- Indication of grab or composite sample with appropriate time and volume information
- Identification of parameter to be analyzed
- Preservative used.

Wastewater Sample Preservation and Holding Time

In most cases, wastewater samples contain one or more unstable pollutants that require immediate (e.g., within 15 minutes) preservation and/or analysis. Provide appropriate chemical preservation before transferring samples to the laboratory. Procedures used to preserve samples include cooling, pH adjustment, and chemical treatment. For some parameters such as cyanide and phenols, add preservatives to sample bottles prior to or immediately following sample collection. For many samples, if preservatives are not appropriately used, bacteria can quickly degrade certain constituents (such as phenols and phosphorus). Other constituents may volatilize (such as volatile organics and sulfides) or may react to form different chemical species (hexavalent chromium, for example). Proper preservation and holding times are essential to ensure sample integrity. (See Table 5-3 and refer to 40 *CFR* Part 136.)

Analysis of samples within one day ensures against error from sample deterioration. However, such prompt analysis is not feasible for composite samples in which portions may be stored for as long as 24 hours. Where possible, provide sample preservation during compositing, usually by refrigeration to 4°C (or icing). If using an automatic sampler with ice, replace the ice as necessary to maintain low temperatures. This is a particular limitation of automatic samplers used during the summer when ice must be frequently replaced.

The 40 *CFR* Part 136 indicates maximum sample holding times. Times listed are the maximum holding times between sample collection and analysis that are allowed for the sample to be considered valid. Typically, the holding time limitations begin upon combination of the last aliquot in a sample. When use of an automatic sampler makes it impossible to preserve each aliquot, the preservation (chemical) should be done immediately following the composite (40 *CFR* 136.3).

[1]Note: Preprinted labels, data sheets, chain-of-custody forms, etc., can be done in the field using software developed by the Superfund Program.

Transfer of Custody and Shipment of Samples

To ensure the validity of the permit compliance sampling data in court, written records must accurately trace the custody of each sample through all phases of the monitoring program. The primary objective of this chain-of-custody is to create an accurate written record (see an example chain-of-custody form in Appendix M) that can be used to trace the possession and handling of the sample from the moment of its collection through its analysis and introduction as evidence.

- Use sample seals to protect the sample's integrity from the time of collection to the time it is opened in the laboratory. The seal should indicate the collector's name, the date and time of sample collection, and sample identification number.

- Pack samples properly to prevent breakage. Seal or lock the shipping container to readily detect any evidence of tampering can be readily detected. Use of tamper proof evidence tape is recommended.

- Place samples on ice or synthetic ice substitute that will maintain sample temperature at 4°C throughout shipment.

- Accompany every sample with a sample tag and a chain-of-custody record that has been completed, signed, and dated. The chain-of-custody record should include the names of sample collectors, sample identification numbers, date and time of sample collection, location of sample collection, and names and signatures of all persons handling the sample in the field and in the laboratory.

- The responsibility for proper packaging, labeling, and transferring of possession of the sample lies with the inspector.

- Accompany all sample shipments with the chain-of-custody record and other pertinent forms. The originator retains a copy of these forms. Also, the originator must retain all receipts associated with the shipment.

- EPA Inspectors with the responsibility of working with hazardous materials that are placed in commerce (transporting/shipping) must have hazardous materials training as required by the Department of Transportation (See Appendix N).

- When transferring possession of samples, the transferee must sign and record the date and time on the chain-of-custody record (use the currently approved record). In general, make custody transfers for each sample, although samples may be transferred as a group, if desired. Each person who takes custody must fill in the appropriate section of the chain-of-custody record.

- Pack and ship samples in accordance with applicable International Air Transportation Association (IATA) and/or DOT regulations. See Table 5-3, footnote 3.

Quality Control

Conduct control checks during the actual sample collection to determine the performance of sample collection techniques. In general, the most common monitoring errors usually are improper sampling methodology, improper preservation, inadequate mixing during compositing and splitting, and excessive sample holding time. In addition, collect and analyze the following samples to check sample collection techniques:

Blanks

- **Trip Blank**. This is a sample vial(s) filled at the laboratory with deionized water. The blank(s) follows the same handling and transport procedures as the samples collected during the event. The blank(s) functions as a check on sample contamination originating from sample transport, shipping and from site conditions.

  Note: Expose the trip blank vial(s), to the same environmental conditions (i.e., light, temperature, etc.) of the sample vial(s) but do not open until it is time for analysis.

- **Field Blank/Field Reagent Blank**. These are similar to the trip blanks except they are prepared in the field with deionized water exactly as the sample(s) that are collected. Field blanks are used to check for analytical artifacts and/or background introduced by sampling and analytical procedures.

- **Equipment/Rinsate Blank**. Collect a blank when using an automatic sampler or other non-dedicated equipment during the sampling process. The blank is a check of the equipment cleanliness. For automatic samplers, prepare blanks prior to collecting samples, by pumping deionized organic free water through the sampler and collecting the discharge purge water in a sample container for analysis for the constituents of concern.

Field Duplicate. Collect this sample simultaneously from the same source at selected stations on a random time frame by grab samples or from two sets of field equipment installed at the site. Duplicate samples check analytical precision as well as evaluate the “representativeness” of the sample aliquot.

Split Samples. These are samples that have been divided into two containers for analysis by separate laboratories. These samples provide an excellent means of identifying discrepancies in the permittee’s analytical techniques and procedures. When filling split samples from a single composite jug, shake the composited sample well and half fill the EPA sample container, then shake the composite again and fill half of the permittee’s container. Repeat the procedure for each parameter collected.

The laboratories performing the sample analyses should also use the following control measures:

Prep/Reagent Blank. A sample consisting of reagent(s), without the target analyte or sample matrix, introduced into the analytical procedure at the appropriate point and carried through all subsequent steps to determine the contribution of the reagents and of the involved analytical steps to error in the observed value.

Quality Control Sample. This is an uncontaminated sample matrix spiked with known amounts of analytes from a source independent from the calibration standards. Use this sample to establish intra laboratory or analyst specific precision and bias or to assess the performance of all or a portion of the measurements' system.

Matrix Spike/Matrix Spike Duplicate (MS/MSD). This sample is three times the normal volume required for a specific chemical analysis to which a known quantity of analyte has been added prior to all sample preparation. The laboratory utilizes the MS/MSD samples as part of their Quality Assurance/Quality Control Program.

- Use a matrix spike to verify accuracy of the analytical procedures.

- A matrix spike duplicate is a duplicate of a matrix spike sample. It measures the precision of the analysis in terms of relative percent difference.

Table 5-4 indicates quality control procedures for field analyses and equipment. Quality control is discussed in greater detail in Chapter Seven of this manual and EPA's *NPDES Compliance Inspector Training Laboratory Analyses Manual*, April 1990.

Table 5-4

Quality Control Procedures for Field Analysis and Equipment

Parameter	General	Daily	Frequency
Dissolved Oxygen			
Membrane Electrode	• Enter the make, model, and serial and/or ID number for each meter in a logbook. • Report data to nearest 0.1 mg/l.	• Calibrate meter using manufacturer's instructions or Winkler-Azide method. • Check membrane for air bubbles and holes. Change membrane and KCl if necessary. • Check leads, switch contacts, etc., for corrosion and shorts if meter pointer remains off-scale.	• Quarterly, check instrument calibration and linearity using a series of at least three dissolved oxygen standards. • Quarterly, take all meters to the laboratory for maintenance, calibration, and quality control checks.
Winkler-Azide method	• Record data to nearest 0.1 mg/l.	• Duplicate analysis should be run as a precision check. Duplicate values should agree within ±0.2 mg/l.	
pH			
Electrode Method	• Enter the make, model, and serial and/or ID number for each meter in a logbook.	• Calibrate the system against traceable standard buffer solutions of known pH value which closely bracket the actual sample pH (e.g., 4, 7, and 10 at the start of a sampling run). • Periodically check the buffers during the sample run and record the data in the logbook. • Be on the alert for erratic meter response arising from weak batteries, cracked electrodes, fouling, etc. • Check response and linearity following highly acidic or alkaline samples. Allow additional time for equilibration. • Check against the closest reference solution each time a violation is found. • Rinse electrodes thoroughly between samples and after calibration. Blot dry.	

Table 5-4

Quality Control Procedures for Field Analysis and Equipment (Continued)

Parameter	General	Daily	Frequency
Conductivity			
	• Enter the make, model, and serial and/or ID number for each meter in a logbook.	• Standardize with KCl standards having similar specific conductance values to those anticipated in the samples. Calculate the cell constant using two different standards. • Rinse cell after each sample to prevent carryover.	• Quarterly, take all meters to lab for maintenance, calibration, and quality control checks. • Quarterly, check temperature compensation. • Quarterly, check date of last platinizing, if necessary. • Quarterly, analyze NIST or EPA reference standard, and record actual vs. observed readings in the logbook.
Residual Chlorine			
Amperometric Titration	• Enter the make, model, and ID and/or serial number of each titration apparatus in a logbook. Report results to nearest 0.01 mg/l.	• Refer to instrument manufacturer's instructions for proper operation and calibration procedures.	• Biweekly, return instrument to lab for maintenance and addition of fresh, standardized reagents.

Table 5-4

Quality Control Procedures for Field Analysis and Equipment (Continued)

Parameter	General	Daily	Frequency
Manual Thermometer	• Enter the make, model, and serial and/or ID number and temperature range. • All standardization should be against a traceable NIST or NIST calibrated thermometer. Reading should agree within ±1°C. If enforcement action is anticipated, calibrate the thermometer before and after analysis. All data should be read to the nearest 1°C. Report data between 10° and 99°C to two significant figures.	• Check for air spaces of bubbles in the column, cracks, etc. Compare with a known source if available.	• Biweekly, check at two temperatures against a NIST or equivalent thermometer. Enter data in logbook. • Temperature readings should agree within ±1°C or the thermometer should be replaced or recalibrated. • Initially and biannually, determine accuracy throughout the expected working range of 0°C to 50°C. A minimum of three temperatures within the range should be used to verify accuracy. Preferable ranges are 5-10°C, 15-25°C, and 35-45°C.
Thermistors, Thermographs	• Enter the make, model, and serial and/or ID number of the instrument in a logbook. All standardization shall be against a NIST or NIST calibrated thermometer. Reading should agree within ±1°C. If enforcement action is anticipated, refer to the procedure listed above.	• Check thermistor and sensing device for response and operation according to the manufacturer's instruction. Record actual vs. standard temperature in logbook.	• Initially and biannually, determine accuracy throughout the expected working range of 0°C to 50°C. A minimum of three temperatures within the range should be used to verify accuracy. Preferable ranges are 5-10°C, 15-25°C, and 35-45°C.
Flow Measurement			
	• Enter the make, model, and serial and/or ID number of each flow measurement instrument in a logbook.	• Install the device in accordance with the manufacturer's instructions and with the procedures given in owner's manual.	• Annually affix record of calibration (NIST, manufacturer) to the instrument log.

Table 5-4

Quality Control Procedures for Field Analysis and Equipment (Continued)

Parameter	General	Daily	Frequency
Automatic Samplers			
	• Enter the make, model, and serial and/or ID number of each sampler in a logbook.		• Check intake velocity vs. head (minimum of three samples), and clock time setting vs. actual time interval.

Quality Assurance Project Plan

The EPA has developed the Quality Assurance Project Plan (QAPP) as a tool for project managers and planners to document the type and quality of data needed for the agency to make environmental decisions and to describe the methods for collecting and assessing those data. The QAPP is required for all EPA projects resulting in the generation, collection, and use of environmental data. The development, review, approval and implementation of the QAPP is an integral part of an Agency-wide Quality System, which is required per the authority of EPA Order 5360.1 A2.

If the EPA is to have confidence in the quality of data used to support environmental decisions, there must be a systematic planning process in place. A product of the systematic planning process is the QAPP. An example of the systematic planning process endorsed by the EPA is the Data Quality Objectives (DQO) Process. The QAPP ensures that the needed management and technical practices are in place so that environmental data used to support agency decisions are of adequate quality and usability for their intended purpose.

Prior to the start of data collection, a QAPP defining the goals and scope of the project, the need for sample collection, a description of the data quality objectives and QA/QC activities to ensure data validity and usability must be developed by the project officer. Thereafter, a review by all parties to the sampling effort, such as a Quality Assurance (QA) Officer, must be conducted. Also, EPA laboratories will require a copy of an approved QAPP prior to conducting any sample analysis. This QAPP requirement applies to both EPA staff and outside contractors. The process for approval of the QAPP and other documents related to the data collection activity should be outlined in the lead organization's Quality Management Plan (QMP).

For further information on the QAPP's please visit the Office of Environmental Information (OEI) web page at: www.epa.gov/quality. Then click on the radio button for "documents" which contains valuable information. There is also a section on Guidance on the same web-site.

Data Handling and Reporting

Verified analytical results are normally entered into a laboratory data management system of some type. The system should contain the sampling data, including time and exact location, analysis dates and times, names of analysts, analytical methods/techniques used, and analytical results. Data are then reported to the project officer (inspector) for inclusion into the compliance report. The quality assurance manual by EPA (*Handbook for Analytical Quality Control in Water and Wastewater Laboratories*, USEPA 1979) and the article by J.J. Delfino ("Quality Assurance In Water and Wastewater Analysis Laboratories," Delfino 1977) provide useful information to the inspector on a number of data management techniques.

5. C. References and Permittee Sampling Inspection Checklist

References

APHA, AWWA, and WEF. *Standard Methods for the Examination of Water and Wastewater*. (Use the most current, accepted edition.)

Associated Water and Air Resources Engineers, Inc. 1973. *Handbook for Industrial Wastewater Monitoring*, USEPA Technology Transfer.

Code of Federal Regulations. 1985. Title 40, Part 136.3. Office of the *Federal Register*.

Delfino, J.J. 1977. "Quality Assurance in Water and Wastewater Analysis Laboratories." *Water and Sewage Works*, 124(7): 79-84.

Federal Register, Vol. 49, No. 209, October 26, 1984. *Guidelines Establishing Test Procedures for the Analysis of Pollutants Under the Clean Water Act; Final Rule and Interim Final Rule and Proposed Rule*.

Harris, D.J., and Keffer, W.J. 1974. *Wastewater Sampling Methodologies and Flow Measurement Techniques*. U.S. Environmental Protection Agency Region VII, EPA-907/9-74-005, Kansas City, Missouri.

Lauch, R.P. 1975. *Performance of ISCO Model 1391 Water and Wastewater Sampler*. U.S. Environmental Protection Agency, EPA-670/4-75-003, Cincinnati, Ohio.

Lauch, R.P. 1976. *A Survey of Commercially Available Automatic Wastewater Samplers*. U.S. Environmental Protection Agency, EPA-600/4-76-051, Cincinnati, Ohio.

Shelley, P.E. 1975. *Design and Testing of a Prototype Automatic Sewer Sampling System*. Office of Research and Development, U.S. Environmental Protection Agency, EPA 600/2-76-006, Washington, D.C.

Shelley, P.E., and Kirkpatrick, G.A. 1975. *An Assessment of Automatic Sewer Flow Samplers*. Office of Research and Development, U.S. Environmental Protection Agency, EPA-600/2-75-065, Washington, D.C.

U.S. Environmental Protection Agency. 1978. *Methods for Benzidine, Chlorinated Organic Compounds, Pentachlorophenol and Pesticides in Water and Wastewater*. Environmental Monitoring and Support Laboratory, Cincinnati, Ohio.

U.S. Environmental Protection Agency. 1979. *NPDES Compliance Sampling Inspection Manual*. MCD-51.

U.S. Environmental Protection Agency. 1979a. *Handbook for Analytical Quality Control in Water and Wastewater Laboratories*. EPA-600/4-79-019.

U.S. Environmental Protection Agency. 1979b. *Methods for Chemical Analysis of Water and Wastes*. EPA-600/4-79-020.

U.S. Environmental Protection Agency. 1981. *Methods for Organic Chemical Analysis of*

Water and Wastes by GC, HPLC and GC/MS. Environmental Monitoring Support Laboratory, Cincinnati, Ohio.

U.S. Environmental Protection Agency. 1982. *Handbook for Sampling and Sample Preservation of Water and Wastewater*. EPA-600/4-82-029.

U.S. Environmental Protection Agency. 1990. *NPDES Compliance Inspector Training Laboratory Analyses Manual*.

U.S. Environmental Protection Agency. May 2000. *EPA Order 5360.1 A2.*

U.S. Environmental Protection Agency. August 2000. Guidance for the Data Quality Objectives Process (G-4). EPA-600/R-96/055.

U.S. Environmental Protection Agency. March 2001. EPA Requirements for QA Project Plans (QA/R-5). EPA-240/B-01/003.

Wood, L.B., and Stanbridge, H.H. 1968. "Automatic Samplers," *Water Pollution Control*, 67(5): 495-520.

PERMITTEE SAMPLING INSPECTION CHECKLIST

A. PERMITTEE SAMPLING EVALUATION

Yes No N/A	1. Take samples at sites specified in permit.
Yes No N/A	2. Locations adequate for representative samples.
Yes No N/A	3. Flow proportioned samples obtained when required by permit.
Yes No N/A	4. Complete sampling and analysis on parameters specified by permit.
Yes No N/A	5. Conduct sampling and analysis in frequency specified by permit.
Yes No N/A	6. Permittee uses method of sample collection required by permit. Required method:_____ If not, method being used is: ( ) Grab ( ) Manual composite ( ) Automatic Composite
Yes No N/A Yes No N/A Yes No N/A Yes No N/A	7. Sample collection procedures adequate: a. Samples refrigerated during compositing. b. Proper preservation techniques used. c. Containers and sample holding times before analyses conform to 40 *CFR* 136.3. d. Samples analyzed in time frame needed.
Yes No N/A	8. Facility performs monitoring and analyses more often than required by permit; if so, results reported in permittee's self-monitoring report.
Yes No N/A	9. Samples contain chlorine.
Y es No N/A	10. Use contract laboratory for sample analysis.
Yes No N/A	11. POTW collects samples from industrial users in pretreatment program.

B. SAMPLING INSPECTION PROCEDURES AND OBSERVATIONS

Yes No N/A	1. Obtain grab samples.
Yes No N/A	2. Obtain composite sample. Compositing Frequency: ___ Preservation: _____
Yes No N/A	3. Refrigerate sample during compositing.
Yes No N/A	4. Obtain flow proportioned sample.
Yes No N/A	5. Obtain sample from facility sampling device.
Yes No N/A	6. Sample representative of volume and nature of discharge.
Yes No N/A	7. Sample split with permittee.
Yes No N/A	8. Employ chain-of-custody procedures.
Yes No N/A	9. Samples collected in accordance with permit.
Yes No N/A	10. Observe excessive foam, grease, floating solids at the outfall.

C. AUTOMATIC SAMPLER PROCEDURES AND OBSERVATIONS

Yes No N/A	1. Sample intake tubing place in a well mixed, representative location (0.4 to 0.6 depth).
Yes No N/A	2. Individual aliquot volume checked and at least 100ml.

PERMITTEE SAMPLING INSPECTION CHECKLIST (Continued)

C. AUTOMATIC SAMPLER PROCEDURES AND OBSERVATIONS (Continued)

Yes No N/A	3.	Proper sample tubing (teflon for organics, otherwise tygon) and tubing at ID at least 0.25 inch.
Yes No N/A	4.	Proper composite sample container (glass for organics, otherwise plastic.
Yes No N/A	5.	Proper refrigeration (4^0C or ice), with required documentation.
Yes No N/A	6.	Proper wastewater velocity in the sample tubing (at least 2 fps).

6. FLOW MEASUREMENT

Contents **Page**

A. Evaluation of Permittee's Flow Measurement 6-1
Objectives and Requirements 6-1
Evaluation of Facility-Installed Flow Devices and Data 6-1
Evaluation of Permittee Data Handling and Reporting 6-3
Evaluation of Permittee Quality Control 6-4

B. Flow Measurement Compliance 6-5
Objectives 6-5
Flow Measurement System Evaluation 6-5
Primary Device Inspection Procedures 6-6
Secondary Device Inspection Procedures 6-10

C. References and Flow Measurement Inspection Checklist 6-14
References 6-14
Flow Measurement Inspection Checklist 6-16

D. Digitized Video Clip – Parshall Flume . . . . . (CD-Rom Insert in binder)

Associated Appendices

O. Supplemental Flow Measurement Information

This page left intentionally blank.

6. A. Evaluation of Permittee's Flow Measurement

Objectives and Requirements

To comply with the permit requirements established under the National Pollutant Discharge Elimination System (NPDES), the permittee must accurately determine the quantity of wastewater being discharged. Discharge flow an measurement is an integral part of the NPDES program, it is important that the inspector evaluate the accuracy of the measurement.

In addition to providing usable information for enforcement purposes, flow measurement serves to:

- Provide data for pollutant mass loading calculations
- Provide operating and performance data on the wastewater treatment plant
- Compute treatment costs, based on wastewater volume
- Obtain data for long-term planning of plant capacity, versus capacity used
- Provide information on Infiltration and Inflow (I/I) conditions, and the need for cost-effective I/I correction

A Flow Measurement Inspection Checklist for the inspector's use appears at the end of this chapter.

Evaluation of Facility-Installed Flow Devices and Data

There are two types of wastewater flow: closed channel flow and open channel flow. Closed channel flow occurs under pressure in a liquid-full conduit (usually a pipe). The facility will usually have a metering device inserted into the conduit which measure flow. Examples of closed channel flow measuring devices are the Venturi meter, the Pitot tube, the paddle wheel, the electromagnetic flowmeter, Doppler, and the transit-time flowmeter. In practice, closed channel flow is normally encountered between treatment units in a wastewater treatment plant, where liquids and/or sludges are pumped under pressure.

Open channel flow occurs in conduits that are not liquid-full. Open channel flow are partially full pipes not under pressure. Open channel flow is the most prevalent type of flow at NPDES-regulated discharge points.

Measure open channel flow using primary and secondary devices. Primary devices are standard hydraulic structures, such as flumes and weirs, that are inserted in the open channel. Inspectors can obtain accurate flow measurements merely by measuring the depth of liquid (head) at the specific point in the primary device. In a weir application, for example, the flow rate is a function of the head of liquid above the weir crest.

Facilities use secondary devices in conjunction with primary devices to automate the flow

measuring process. Typically, secondary devices measure the liquid depth in the primary device and convert the depth measurement to a corresponding flow, using established mathematical relationships. Examples of secondary devices are floats, ultrasonic transducers, bubblers, and transit-time flowmeters. A recorder generally measures the output of the secondary device transmitted to a recorder and/or totalizer to provide instantaneous and historical flow data to the operator. Outputs may also be transmitted to sampling systems to facilitate flow proportioning. Appendix O contains further information on flow measurement devices.

The inspector must assure the permittee obtains accurate wastewater flow data to calculate mass loading (quantity) from measured concentrations of pollutants discharged as required by many NPDES permits. The permittee must produce data that meet requirements in terms of precision and accuracy. Precision refers to data reproducibility or the ability to obtain consistent data from repeated measurements of the same quantity. Accuracy refers to the agreement between the amount of a component measured by the test and the amount actually present.

The accuracy of flow measurement (including both primary and secondary devices) varies widely with the device, its location, environmental conditions, and other factors such as maintenance and calibration. Faulty fabrication, construction, and installation of primary devices are common sources of errors. Improper calibration, misreading, and variation in the speed of totalizer drive motors are major errors related to secondary devices. See Appendix O - “Supplement Flow Measurement Information.” When evaluating facility installed devices, the inspector should do the following:

- Verify that the facility has installed primary and secondary devices according to manufacturer's manual instructions.

- Inspect the primary device for evidence of corrosion, scale formation, or solids accumulation that may bias the flow measurement.

- Verify that weirs are level, plumb, and perpendicular to the flow direction.

- Verify that flumes are level, the throat walls (narrowed section of flume) are plumb, and the throat width is the standard size intended.

- Inspect historical records (i.e., strip charts and logs) for evidence of continuous flow measurements. Compare periods of missing data with maintenance logs for explanations of measuring system problems.

- Observe the flow patterns near the primary device for excessive turbulence or velocity. The flow lines should be straight.

- Ensure that the flow measurement system or technique being used measures the entire wastewater discharge as required by the NPDES permit. Inspect carefully the piping to determine whether there are any wastewater diversions, return lines, or bypasses around the system. Make sure the system meets the permit requirement, such as instantaneous or continuous, daily, or other time interval measures. Noted anomalies in the inspection report.

- Verify that the site chosen for flow measurement by the facility is appropriate and is in

accordance with permit requirements.

- Verify that the site chosen by the facility for flow measurement is suitable for type of discharge, flow range, suspended solids concentration, and other relevant factors.

- Verify that the facility has closed channel flow measuring devices where the pipe is always full. If these devices are used, then there must be also a means for the permittee and regulatory agencies/inspector to verify the accuracy of these meters. Primary flow measuring devices such as weirs and flumes are ideal for this purpose.

- Verify that the facility uses appropriate tables, curves, and formulas to calculate flow rates.

- Review and evaluate calibration and maintenance programs for the discharger's flow measurement system. The permit normally requires the facility to check the calibration regularly by the permittee. The facility must ensure that their flow measurement systems are calibrated by a qualified source at least once a year to ensure their accuracy. Lack of such a program is considered unacceptable for NPDES compliance purposes.

- Verify that the facility calibrates flowmeters across the full range of expected flow.

- Verify that primary and secondary devices are adequate for normal flow as well as maximum expected flow. Note whether the flow measurement system can measure the expected range of flow.

- Collect accurate flow data during inspection to validate self monitoring data collected by the permittee.

- The facility must install a flow measuring system that has the capability of routine flow verification by the permittee or appropriate regulatory personnel.

Evaluation of Permittee Data Handling and Reporting

The permittee or facility must keep flow measurement records for a minimum period of three years as the permit requires. Many flow measuring devices produce a continuous flowchart for plant records. Flow records should contain date, flow, time of reading, and operator's name, if applicable the facility must also record. The facility should record maintenance, inspection dates, and calibration data.

The inspector should review the permittee's records and note the presence or absence of data such as:

- Frequency of routine operational inspections

- Frequency of maintenance inspections

- Frequency of flowmeter calibration (should be as specified in permit, generally at least once per year)

- Irregularity or uniformity of flow.

Evaluation of Permittee Quality Control

The inspection should evaluate following quality control issues during a compliance inspection to ensure:

- Proper operation and maintenance of equipment
- Accurate records
- Sufficient inventory of spare parts
- Valid flow measurement techniques
- Precise flow data
- Adequate frequency of calibration checks.

Evaluate precision of float driven flow meters when flows are stable. Push the float gently downward, hold for 30 seconds, then allowed to return normally. The recorded flow rate should be the same before and after the float was moved. Evaluate accuracy by measuring the instantaneous flow rate at the primary device used at the facility and comparing the value against the value on the meter, graph, integrator, or company record. The difference between two stable totalizer readings (flow is steady for 10 minutes or more) should not exceed ±10 percent of the instantaneous flow measured at the primary device. Note that most flow measurement systems have both an instantaneous meter readout as well as a totalizer. Both of these devices should be in agreement but that is not always the case due to electrical and other various malfunctions in the flow measuring system. In most cases, the totalizer reading will be what is reported by the permittee. If this is the case, then that device should be checked for accuracy and the permittee's flow measuring system rated accordingly.

In addition, the inspector can evaluate accuracy by installing a second flow measurement system, sometimes referred to as a reference system. Agreement in measured flow rates between the two systems should be within ±10 percent of the reference rate if all conditions are as recommended for the systems.

6. B. Flow Measurement Compliance

Objectives

The current NPDES program depends heavily on the permittee's submittal of self-monitoring data. The flow discharge measured during the NPDES compliance inspection should verify the flow measurement data collected by the permittee, support any enforcement action that may be necessary, and provide a basis for reissuing or revising the NPDES permit.

Flow Measurement System Evaluation

The responsibility of the inspector includes collecting accurate flow data during the inspection and validating data collected during the permittee's self-monitoring.

The NPDES inspector must check both the permittee's flow data and the flow measurement system to verify the permittee's compliance with NPDES permit requirements. When evaluating a flow measurement system, the inspector should consider and record findings on the following:

- Whether the system measures the entire discharge flow.
- The system's accuracy and good working order. This will include a thorough physical inspection of the system and comparison of system readings to actual flow or those obtained with calibrated portable instruments.
- The need for new system equipment.
- The existence or absence of a routine calibration and maintenance program for flow measurement equipment.

If the permittee's flow measurement system is accurate within ±10 percent, the inspector should use the installed system. If the flow sensor or recorder is found to be inaccurate, the inspector should determine whether the equipment can be corrected in time for use during the inspection. If the equipment cannot be repaired in a timely manner, use the portable flow sensor and recorder used to assess the accuracy of the permittee's system for the duration of the inspection. If nonstandard primary flow devices are being used, request the permittee to supply data on the accuracy and precision of the method being employed.

For flow measurement in pipelines, the inspector may use a portable flowmeter. The inspector should select a flowmeter with an operating range wide enough to cover the anticipated flow to be measured. The inspector should test and calibrate the selected flowmeter before use. The inspector should select the site for flow measurement according to permit requirements and install the selected flowmeter according to the manufacturer's specifications. The inspector should use the proper tables, charts, and formulas as specified by the manufacturer to calculate flow rates.

Four basic steps are involved in evaluating the permittee's flow measurement system:

- Physical inspection of the primary device
- Physical inspection of the secondary device and ancillary equipment
- Flow measurement using the primary/secondary device combination of the permittee
- Certification of the system using a calibrated, portable instrument.

The following sections present, procedures for inspecting the more common types of primary and secondary devices, for measuring flow using common permanent and portable systems, and for evaluating flow data. Please note that the number of primary/secondary device permutations is limitless; therefore, it is not feasible to provide procedures for all systems. When encountering systems other than those discussed here the inspector should consult the manufacturers manual/personnel for advice before preparing a written inspection procedure.

Primary Device Inspection Procedures

The two most common open channel primary devices are sharp-crested weirs and Parshall flumes. Common sources of error when using them include the following:

- Faulty fabrication—weirs may be too narrow or not "sharp" enough. Flume surfaces may be rough, critical dimensions may exceed tolerances, or throat walls may not be vertical.

- Improper installation—the facility may install weirs and flumes too near pipe elbows, valves, or other sources of turbulence. The devices may be out of level or plumb.

- Sizing errors—the primary device's recommended applications may not include the actual flow range.

- Poor maintenance—primary devices corrode and deteriorate. Debris and solids may accumulate in them.

Specific inspection procedures for the sharp-crested weir, the Parshall flume, and the Palmer-Bowlus flume devices follow.

Sharp-Crested Weir Inspection Procedures

- Inspect the upstream approach to the weir.

  - Verify that the weir is perpendicular to the flow direction.

  - Verify that the approach is a straight section of conduit with a length at least 20 times the maximum expected head of liquid above the weir crest.

  - Observe the flow pattern in the approach channel. The flow should occur in smooth stream lines without velocity gradients and turbulence.

  - Check the approach, particularly in the vicinity of the weir, for accumulated solids,

debris, or oil and grease. The approach must have no accumulated matter.

- Inspect the sharp-crested weir.
  - Verify that the crest of the weir is level across the entire conduit traverse.
  - Measure the width of the weir crest. The edge of the weir crest should be no more than 1/8-inch thick.
  - Make certain the weir crest corresponds to zero gauge elevation (zero output on the secondary device).
  - Measure the angle formed by the top of the crest and the upstream face of the weir. This angle must be 90 degrees.
  - Measure the chamfer (beveled edge) on the downstream side of the crest. The chamfer should be approximately 45 degrees.
  - Visually survey the weir-bulkhead connection for evidence of leaks or cracks which permit bypass.
  - Measure the height of the weir crests above the channel floor. The height should be at least twice the maximum expected head (2H) of liquid above the crest.
  - Measure the width of the end contraction. The width should be at least twice the maximum expected head (2H) of the liquid above the crest.
  - Inspect the weir for evidence of corrosion, scale formation, or clinging matter. The weir must be clean and smooth.
  - Observe flow patterns on the downstream side of the weir. Check for the existence of an air gap (ventilation) immediately adjacent to the downstream face of the weir. Ventilation is necessary to prevent a vacuum that can induce errors in head measurements. Also ensure that the crest is higher than the maximum downstream level of water in the conduit.
  - Verify that the nappe is not submerged and that it springs free of the weir plate.
  - If the weir contains a V-notch, measure the apex angle. The apex should range from 22.5 degrees to 90 degrees. Verify that the head is between 0.2 and 2.0 feet. The weir should not be operated with a head of less than 0.2 feet since the nappe may not spring clear of the crest.

King's *Handbook of Hydraulics*, 1963, frequently referenced throughout this chapter, provides a detailed discussion on weirs.

Parshall Flume Inspection Procedures

- Inspect the flume approach.
  - The flow pattern should be smooth with straight stream lines, be free of turbulence, and have a uniform velocity across the channel.
  - The upstream channel should be free of accumulated matter.
- Inspect the flume.
  - The flume should be located in a straight section of the conduit.
  - Flow at the entrance should be free of "white" water.
  - The flume should be level in the transverse and translational directions.
  - Measure the dimensions of the flume. Dimensions are strictly prescribed as a function of throat width (see Figure I-5 in Appendix O for critical dimensions).
  - Measure the head of liquid in the flume and compare with the acceptable ranges in Table I-4 in Appendix O.
- Inspect the flume discharge.
  - Verify that the head of water in the discharge is not restricting flow through the flume. The existence of a "standard wave" is good evidence of free flow and verifies that there is no submergence present.
  - Verify whether submergence occurs at near maximum flow (e.g., look for water marks on the wall).

Palmer-Bowlus Flume Inspection Procedures

- Inspect the flume approach as outlined above (these flumes are seldom used for effluent flow measurement).
- Inspect the flume.
  - The flume should be located in a straight section of the conduit.
  - Flow at the entrance should be free of "white" water.
  - Observe the flow in the flume. The profile should approximate that depicted in Figure I-8 in Appendix O.
  - The flume should be level in the transverse direction and should not exceed the translational slope in Table I-6 in Appendix O.

- Measure the head of water in the flume. Head should be within the ranges specified in Table I-6 in Appendix O.

- Inspect the flume discharge.

  - Verify that free flow exists. Look for the characteristic "standing wave" in the divergent section of the flume.

Venturi Meter Inspection Procedures

- Verify that the facility installed the Venturi meter according to manufacturer's instructions.

- Verify that the facility installed the Venturi meter downstream from a straight and uniform section of pipe, at least 5 to 20 diameters, depending on the ratio of pipe to throat diameter and whether straightening vanes are installed upstream. (Installation of straightening vanes upstream will reduce the upstream piping requirements.)

- Verify that the pressure measuring taps are free of debris and are not plugged.

- Calibrate the Venturi meter in place by either the volumetric method or the comparative dye dilution method to check the manufacturer's calibration curve or to develop a new calibration curve.

Secondary Device Inspection Procedures

The following are common sources of error in the use of secondary devices:

- Improper location—gauge is located in the wrong position relative to the primary device.
- Inadequate maintenance—gauge is not serviced regularly.
- Incorrect zero setting—zero setting of gauge is not the zero point of the primary device.
- Operator error—human error exists in the reading.

Specific inspection procedures follow.

Flow Measurement in Weir Applications

- Determine that the head measurement device is positioned 3 to 4 head lengths upstream of a weir.

- Verify that the zero or other point of the gauge is equal to that of the primary device.

The inspector should use an independent method of measuring head, such as with a yardstick or carpenter's rule (be sure to take your measurement at least four times the maximum head upstream and from the weir and convert to nearest hundredth of a foot). To determine flow

rate, use the appropriate head discharge relationship formula (see Table I-1 in Appendix O).

Flow Measurement in Parshall Flume Applications

Flow Measurement—Free-Flow Conditions.

- Determine upstream head (H_a) using staff gauge.
  - Verify that staff gauge is set to zero head. Use either a yardstick or carpenter's rule.
  - Verify that staff gauge is at proper location (two-thirds the length of the converging section back from the beginning of the throat).
  - Read to nearest division the gauge division at which liquid surface intersects gauge.
  - Read H_a in feet from staff gauge.
- To determine flow rate, use Figure I-6 in Appendix O in the unit desired, use tables published in flow measurement standard references, or calculate using the coefficients in Table I-5 in Appendix O.

Flow Measurement—Submerged-Flow Condition.

Generally it is difficult to make field measurements with submerged-flow conditions. In cases when measurements can be obtained (using a staff or float gauge), the procedures listed below should be followed:

- Determine upstream head using staff or float gauge.
  - Read to nearest division and, at the same time as for H_b, the gauge division at which liquid surface intersects gauge.
  - Calculate H_a from gauge reading.
- Determine downstream head (H_b) using staff or float gauge.
  - H_b refers to a measurement at the crest.
  - Read to nearest division, and at the same time as for H_a, the gauge division at which liquid surface intersects gauge.
  - Calculate H_b from staff reading.

- Determine flow rate.
  - Calculate percent submergence:

$$\left[\frac{H_b}{H_a}\right] \times 100.$$

  - Consult Table I-6 in Appendix O.
  - When a correction factor is obtained, use H_a and find free-flow from Figure I-6.
  - Multiply this free-flow value by the correction factor to obtain the submerged flow.

The inspector may use an independent method of measuring head, such as a yardstick or carpenter's rule at the proper head measurement point. Because of the sloping water surface in the converging section of a flume, it is essential that the proper head measurement point be used.

Flow Measurement in Palmer-Bowlus Flume Applications

- Obtain head measurements as in the Parshall Flume application, using the secondary device. The head is the height of water above the step. The total depth upstream of the step is not the head.
- Refer to manufacturer-supplied discharge tables to convert head measurements to flow data. Palmer-Bowlus flumes, unlike Parshall flumes, are not constructed to standard dimensional standards. The inspector must not use discharge tables supplied by other manufacturers.

Verification

Most flow measurement errors result from inadequate calibration of the flow totalizer, and recorder. If the inspector has determined that the primary device has been installed properly, verification of the permittee's system is relatively simple. Compare the flow determined from the inspector's independent measurement to the flow of the permittee's totalizer or recorder. The inspector's flow measurements should be within 10 percent of the permittee's measurements to certify accurate flow measurement. Optimally, flow comparisons should be made at various flow rates to check system accuracy.

When the permit requires that the daily average flow be measured by a totalizing meter, the inspector should verify that the totalizer is accurate, i.e., properly calibrated. This can be done during a period of steady flow by reading the totalizer and at the same time starting a stopwatch. Start the stopwatch just as a new digit starts to appear on the totalizer. After 10 to 30 minutes, the totalizer should be read again; just as a new digit begins to appear, the stop watch is read. Subtract the two totalizer readings to determine, the total flow over the measured time period. Calculate the flow rate in gallons per minute by using the time from the stop watch. Compare this flow rate to the flow determined by actual measurement of the head

made at the primary device at the time interval. Consider the calibration of the totalizer satisfactory if the two flows are within 10 percent of each other, when the actual measured flow is used as the known value, or divisor, in the percent calculation.

6. C. References and Flow Measurement Inspection Checklist

References

Associated Water and Air Resource Engineers, Inc. 1973. *Handbook for Industrial Wastewater Monitoring*. USEPA, Technology Transfer.

Blasso, L. 1975. "Flow Measurement Under Any Conditions," *Instruments and Control Systems*, 48(2): 45-50.

Bos, M.G. 1976. *Discharge Measurement Structures*, Working Group on Small Hydraulic Structures International Institute for Land Reclamation and Improvement, Wageningen, The Netherlands.

Eli, R., and H. Pederson. 1979. *Calibration of a 90° V-Notch Weir Using Parameters Other than Upstream Head*. EPA-61809A-2B.

ISCO. 1985. *Open Channel Flow Measurement Handbook*, Lincoln, Nebraska. (Contains tables of various flow measurement devices.)

King, H.W., and E.F. Brater. 1963. *Handbook of Hydraulics*. 5th ed. New York: McGraw-Hill Book Co. (contains tables of various flow measurement devices.)

Mauis, F.T. 1949. "How to Calculate Flow Over Submerged Thin-Plate Weirs." *Eng. News-Record*. p. 65.

Metcalf & Eddy, Inc. 1972. *Wastewater Engineering*. New York: McGraw Hill Book Co.

Robinson, A.R. 1965. *Simplified Flow Corrections for Parshall Flumes Under Submerged Conditions*, Civil Engineering, ASCE.

Shelley, P.E., and G.A. Kirkpatrick. 1975. *Sewer Flow Measurement; A State of the Art Assessment*, U.S. Environmental Protection Agency, EPA-600/2-75-027.

Simon, A. 1976. *Practical Hydraulics*. New York: John Wiley & Sons.

Smoot, G.F. 1974. *A Review of Velocity-Measuring Devices*. U.S. Department of the Interior (USDI), United States Geological Survey (USGS). Open File Report, Reston, Virginia.

Stevens. *Water Resources Data Book*, Beaverton, Oregon. (Contains tables of various flow measurement devices.)

Thorsen, T., and R. Oden. 1975. "How to Measure Industrial Wastewater Flow," *Chemical Engineering*, 82(4): 95-100.

U.S. Department of Commerce, National Bureau of Standards. 1975. *A Guide to Methods and Standards for the Measurement of Water Flow*. COM-75-10683.

U.S. Department of the Interior (USDI), Bureau of Reclamation. 1967. *Water Measurement Manual*, 2nd Ed. (Contains tables of various flow measurement devices.)

U.S. Environmental Protection Agency, Office of Water Enforcement and Permits Enforcement Division. September 1981. *NPDES Compliance Flow Measurement Manual*.

FLOW MEASUREMENT INSPECTION CHECKLIST

A. GENERAL

Yes No N/A	1. a.	Primary flow measuring device properly installed and maintained.
Yes No N/A	b.	Flow measured at each outfall? _____ Number of outfalls? _____
Yes No N/A	c.	Is there a straight length of pipe or channel before and after the flowmeter of at least 5 to 20 diameters?
Yes No N/A	d.	If a magnetic flowmeter is used, are there sources of electric noise in the near vicinity?
Yes No N/A	e.	Is the magnetic flowmeter properly grounded?
Yes No N/A	f.	Is the full pipe requirement met?
Yes No N/A	2. a.	Flow records properly kept.
Yes No N/A	b.	All charts maintained in a file.
Yes No N/A	c.	All calibration data entered into a log book.
Yes No N/A	3.	Actual discharged flow measured.
Yes No N/A	4.	Effluent flow measured after all return lines.
Yes No N/A	5.	Secondary instruments (totalizers, recorders, etc.) properly operated and maintained.
Yes No N/A	6.	Spare parts stocked.
Yes No N/A	7.	Effluent loadings calculated using effluent flow.

B. FLUMES

Yes No N/A	1.	Flow entering flume reasonably well-distributed across the channel and free of turbulence, boils, or other disturbances.
Yes No N/A	2.	Cross-sectional velocities at entrance relatively uniform.
Yes No N/A	3.	Flume clean and free of debris and deposits.
Yes No N/A	4.	All dimensions of flume accurate and level.
Yes No N/A	5.	Side walls of flume vertical and smooth.
Yes No N/A	6.	Sides of flume throat vertical and parallel.
Yes No N/A	7.	Flume head being measured at proper location.
Yes No N/A	8.	Measurement of flume head zeroed to flume crest.
Yes No N/A	9.	Flume properly sized to measure range of existing flow.
Yes No N/A	10.	Flume operating under free-flow conditions over existing range of flows.
Yes No N/A	11.	Flume submerged under certain flow conditions.
Yes No N/A	12.	Flume operation invariably free-flow.

FLOW MEASUREMENT INSPECTION CHECKLIST (Continued)

C. WEIRS

Yes No N/A	1. What type of weir does the facility use?
Yes No N/A	2. Weir exactly level.
Yes No N/A	3. Weir plate plumb and its top and edges sharp and clean.
Yes No N/A	4. Downstream edge of weir is chamfered at 45°.
Yes No N/A	5. Free access for air below the nappe of the weir.
Yes No N/A	6. Upstream channel of weir straight for at least four times the depth of water level and free from disturbances.
Yes No N/A	7. Distance from sides of weir to side of channel at least 2H.
Yes No N/A	8. Area of approach channel at least (8 × nappe area) for upstream distance of 15H.
Yes No N/A	9. If not, is velocity of approach too high?
Yes No N/A	10. Head measurements properly made by facility personnel.
Yes No N/A	11. Leakage does not occur around weir.
Yes No N/A	12. Use of proper flow tables by facility personnel.

D. OTHER FLOW DEVICES

	1. Type of flowmeter used:
	2. What are the most common problems that the operator has had with the flowmeter?
	3. Measured wastewater flow: _____ mgd; Recorded flow: _____; Error _____%

E. CALIBRATION AND MAINTENANCE

Yes No N/A	1. Flow totalizer properly calibrated.
	2. Frequency of routine inspection by proper operator: _____/day.
	3. Frequency of maintenance inspections by plant personnel: _____/year.
Yes No N/A	4. Flowmeter calibration records kept. Frequency of flowmeter calibration: _____/month.
Yes No N/A	5. Flow measurement equipment adequate to handle expected ranges of flow rates.
Yes No N/A	6. Calibration frequency adequate.

7. LABORATORY PROCEDURES AND QUALITY ASSURANCE

Contents Page

A. Objectives and Requirements 7-1

B. Sample Handling Procedures 7-3
Evaluation of Permittee Sample Handling Procedures 7-3

C. Laboratory Analyses Techniques Evaluation 7-5
Evaluation of Permittee Laboratory Analytical Procedures 7-5
Evaluation of Permittee Laboratory Facilities and Equipment 7-5

D. Quality Assurance and Quality Control 7-9
Evaluation of the Precision and Accuracy of the Permittee Laboratory 7-9
Evaluation of Permittee Data Handling and Reporting 7-10
Evaluation of Permittee Laboratory Personnel 7-11
Evaluation of Contract Laboratories 7-11
Overview of the Discharge Monitoring Report Quality Assurance Program and How It Relates to the Inspection Program 7-12

E. References and Laboratory Quality Assurance Checklist 7-15
References 7-15
Laboratory Quality Assurance Checklist 7-17

This page left intentionally blank.

7. A. Objectives and Requirements

The analytical laboratory provides both qualitative and quantitative information for determining the extent of permittee compliance with permit discharge requirements. To be valuable or useful, the data must be representative and accurately describe the characteristics and concentrations of constituents in the samples submitted to the laboratory. The objectives of laboratory Quality Assurance (QA) are to monitor and document the accuracy and precision of the results reported and to meet reliability requirements.

QA refers to a total program for ensuring the reliability of data by utilizing administrative and technical procedures and policies regarding personnel, resources, and facilities. QA is required for all functions bearing on environmental measurements and includes activities such as project/study definition; sample collection and tracking; laboratory analysis; data validation, analysis, reduction, and reporting; documentation; and data storage systems. Thus, the QA program is designed to evaluate and maintain the desired quality of data. Quality Control (QC), a function of QA, is the routine application of procedures for controlling the accuracy and precision of the measurement process and includes the proper calibration of instruments and the use of the appropriate analytical procedures.

The 40 *Code of Federal Regulations* (*CFR*) Section 122.41(e) (conditions applicable to all permits), requires adequate laboratory and process controls, including appropriate QA procedures. Each permittee's laboratory must have a QA/QC program. The laboratory must document the QA program in a written QA/QC manual and the lab should make it available to all personnel responsible for sample analyses. The manual must clearly identify the individuals involved in the QA program and document their responsibilities. The laboratory's standard operating procedures must meet user requirements in terms of specificity, completeness, precision, accuracy, representativeness, and comparability of the required testing procedures . The laboratory should devote approximately 10 to 20 percent of their resources to their QA/QC program.

Guidance in this chapter is broad based and may not be applicable to every laboratory. This chapter includes a Laboratory Quality Assurance Checklist for the inspector's use at the end of the chapter. For detailed information concerning laboratory QA, refer to Environmental Protection Agency's (EPA's) *Handbook for Analytical Quality Control in Water and Wastewater Laboratories* (USEPA 1979a). Further information is also available in the U.S. Environmental Protection Agency's (EPA's) *NPDES Compliance Monitoring Inspector Training Laboratory Analysis Module* (April 1990). If a more detailed assessment of a laboratory is required, personnel with more extensive knowledge of the methodologies should perform the inspection.

This page left intentionally blank.

7. B. Sample Handling Procedures

Evaluation of Permittee Sample Handling Procedures

Proper sample handling procedures are necessary in the laboratory from the sample's receipt to its discard. Sample handling procedures for small permittees may differ from procedures for larger permittees because staff organizational structures and treatment facility designs vary from one facility to the next. However, proper sample handling procedures should be standardized, utilized and documented by all permittees. In evaluating laboratory sample handling procedures, the inspector should verify the following:

- The laboratory has a sample custodian.
- The laboratory area is secure and restricts entry to authorized personnel only.
- The laboratory has a sample security area that is dry, clean, and isolated, has sufficient refrigerated space, and can be locked securely.
- A minimum number of people handle the samples.
- The custodian receives all incoming samples, signs the chain-of-custody record sheet accompanying the samples and retains the sheet as a permanent record.
- The custodian performs or analyzes checks of proper preservation, container type, and holding times and documents results.
- The custodian ensures that samples are properly stored.
- Only the custodian distributes samples to personnel who are to perform analyses.
- Transfer of samples is usually document by the sample custodian.
- Care and custody records for handling samples are accurate and up-to-date.

This page left intentionally blank.

7. C. Laboratory Analyses Techniques Evaluation

Evaluation of Permittee Laboratory Analytical Procedures

The permittee's laboratories or its contract laboratories must use uniform methods, thus, eliminating methodology as a variable when data are compared or shared among laboratories. The permittee's laboratory must select by consulting 40 *CFR* Part 136 or EPA for approval of alternative methods. A permittee may only use alternative test procedures if the procedures have EPA approval, as specified by 40 *CFR* 136.4 and 136.5, and promulgated under Public Law (PL) 92-500.

Many standardized test procedures promulgated under 40 *CFR* Part 136 are covered in *Methods for Chemical Analysis of Water and Wastes* (USEPA 1979b). Revisions and new additions to this publication are made whenever new analytical techniques or instruments are developed. These are considered accepted after final publication in the *Federal Register*. The latest accepted edition of *Standard Methods for the Examination of Water and Wastewater* [American Public Health Association (APHA), American Water Works Association (AWWA), and Water Environment Federation (WEF)]. (The most current 40 *CFR* Part 136 may supersede any method or technique cited in this manual.) Other approved methods from United States Geological Survey (USGS), American Society for Testing and Materials (ASTM), and several commercial vendor methods are also reference in 40 CFR 136.

In evaluating laboratory analytical procedures, the inspector should verify the following:

- The lab follows analytical methods specified in the most current 40 *CFR* Part 136 and properly performs any deviations allowed by 40 *CFR* Part 136.
- The lab uses a QC system that conforms to the system specified in the permit or to that detailed in published *Standard Methods* (APHA, AWWA, and WEF) (e.g., initial demonstration of capability for organic analyses).
- The lab maintains a QC record on reagent preparation, instrument calibration and maintenance, incubator temperature, and purchase of supplies.
- The lab conducts QC checks are made on materials, supplies, equipment, instrument calibration and maintenance, facilities, analyses, and standard solutions.
- The lab maintains documentation of any EPA-approved deviation from specified test procedures.

Evaluation of Permittee Laboratory Facilities and Equipment

To verify that the proper analytical procedures are being followed, the inspector should have the responsible analyst describe each of the procedures. The inspector should be alert to any

deviation from the specified analytical method. Any questions regarding the proper procedures can be resolved by referring to the cited methodology. Even simple analyses can yield invalid results if the methodology cited in 40 *CFR* Part 136 is not exactly followed. Certain required deviations from the approved method are cited in 40 CFR 136, notes.

Laboratory Services

The availability of laboratory services affects data reliability. The inspector should verify that the laboratory provides the following items:

- An adequate supply of laboratory pure water, free from chemical interferences and other undesirable contaminants. The lab should check water quality routinely and document it.
- Adequate bench, instrumentation, storage, and recordkeeping space.
- Clean and orderly work area to help avoid contamination.
- Adequate humidity and temperature control.
- Adequate lighting and ventilation.
- Dry, uncontaminated, compressed air when required.
- Efficient fume hood systems.
- Necessary equipment such as hot plate, incubator, water bath, refrigerator for samples, pH meter, thermometer, and balance.
- Electrical power for routine laboratory use and, if appropriate, voltage-regulated sources for delicate electronic instruments.
- Emergency equipment, fire extinguisher, eye wash station, shower, first aid kit, gloves, and goggles.
- Vibration-free area for accurate weighings.

The inspector should also check that the lab uses proper safety equipment (lab coats, gloves, safety glasses, goggles, and fume hoods) where necessary. The laboratory should have a fire extinguisher, eye wash station, shower, and first aid kit. The inspector should document any problems and refer to the proper authority [e.g., Occupational Safety and Health Administration (OSHA)].

Instruments and Equipment

Instrumentation is extremely important in the analytical laboratory. To a certain extent, analytical instrumentation is always developmental; manufacturers are continually redesigning and upgrading their products, striving for miniaturization, enhanced durability and sensitivity,

and improved automation. In evaluating laboratory instruments and equipment, the inspector should verify the following:

- The lab follows standard and specific procedures for cleaning glassware and containers are followed. Chapter Two of EPA's *NPDES Compliance Monitoring Inspector Training Laboratory Analysis Module* (April 1990) contains detailed information on glassware cleaning.

- The lab has written requirements (e.g., standard operating procedures) for daily operation of instruments and equipment which are easily accessible and the staff follow them.

- Standards and appropriate blanks are available from suppliers to perform standard calibration procedures. The lab should use standard concentrations that closely bracket actual sample concentrations. Sources of standards are documented and where possible, traceable to a national standard [e.g., National Institute of Standards and Technology (NIST)].

- Records of each set of analysis performed including the order in which calibration, QA and samples were analyzed (i.e., analysis run logs or instrument run logs).

- Lab has written troubleshooting procedures are available to identify common equipment malfunctions.

- Lab follows written schedules for replacement, cleaning, checking, and/or adjustment by service personnel.

- Lab maintains documentation on equipment maintenance and service checks.

Commonly used analytical instruments include analytical balances, pH meters, dissolved oxygen meters, conductivity meters, turbidimeters, spectrophotometers, atomic absorption spectrophotometers, organic carbon analyzers, selective ion analyzers, gas-liquid chromatographs, titrimetric analyses, and temperature controls. Chapter Two of EPA's *NPDES Compliance Monitoring Inspector Training Laboratory Analysis Module*. (April 1990) includes a detailed discussions on these instruments.

Maintenance of laboratory facilities and equipment is an important factor in laboratory QA. Qualified service checks should be performed and documented.

Supplies

Chemical reagents, solvents, and gases are available in many grades of purity, ranging from technical grade to various ultrapure grades. The purity of the materials required in analytical chemistry varies with the type of analysis. The parameter being measured, the analytical method, and the sensitivity and specificity of the detection system determine the purity of the reagents required. Do not use reagents of lesser purity than that specified by the method. In evaluating laboratory supplies, the inspector should verify that the laboratory:

- Uses the required reagent purity for the specific analytical method.
- Stores standard reagents and solvents according to the manufacturer's directions.
- Checks working standards frequently to determine changes in concentration or composition.
- Verifies concentrations of stock solutions before being used to prepare new working standards.
- Date supplies with limited shelf life upon receipt and observe shelf-life recommendations, including the discard date on the container and the storage requirements.
- Prepare and standardize reagents against reliable primary standards.
- Label standards and reagents properly including the date of preparation, concentration and the analyst's identification.
- Store standards and reagents in appropriate containers and under required method conditions. If conditions are not specified, standards and reagents are stored according to 40 *CFR* Part 136, Table II. See Chapter Five, Sampling, Table 5-3.
- Check the accuracy of purchased solutions as per method requirements.
- Use clean containers of suitable composition with tight-fitting stoppers or caps for storage.
- Discard reagents when signs of discoloration, formation of precipitates, or significant changes in concentrations are observed.
- Prepare stock solutions and standards using volumetric glassware.

7. D. Quality Assurance and Quality Control

Evaluation of the Precision and Accuracy of the Permittee Laboratory

The purpose of laboratory control procedures is to ensure high-quality analyses by the use of control samples, control charts, reference materials, and instrument calibration. The laboratory must initiate and maintain controls throughout the analysis of samples. Specifically, each testing batch must contain at least one blank, standard, duplicate, and spiked (as applicable) sample analysis. When a batch contains more than 10 samples, every tenth sample should be followed by a duplicate and a spike (as applicable).

The precision of laboratory findings refers to the reproducibility or degree of agreement among replicate measurements of the same quantity. The closer the numerical values of the measurements come to each other, the more precise are the measurements. In a laboratory QC program, precision is determined by the analysis of actual samples in duplicate. These may represent a range of concentrations and a variety of interfering materials usually encountered during the analysis. Accuracy refers to the degree of difference between observed values and known or actual values. The closer the value of the measurement comes to the actual value, the more accurate the measurement is. The accuracy of a method can be determined by analyses of samples to which known amounts of reference standards have been added (spiked samples).

In evaluating the precision of the measurement process, the inspector should verify that:

- The lab introduces control samples into the train of actual samples to monitor the performance of the analytical system. Control samples include any digestions, extractions, distillations and other sample preparations as for sample analyses.

- Perform duplicate analyses with each batch of samples to determine precision. In general, 10 percent of the samples should be duplicated.

- Prepare and use precision control charts or other statistical techniques for each analytical procedure. Develop precision control charts by collecting data from a minimum of 15 to 20 duplicate samples (run in controlled conditions) over an extended period (e.g., 10 to 20 days). Statistical methods include calculation of mean, standard deviation, and variance to define the range and variability of the data.

- Take corrective actions when data fall outside the warning and control limits.

- Document out-of-control data, the situation, and the corrective action taken.

In evaluating accuracy, the inspector should verify that the laboratory:

- The lab introduces spiked samples into the train of actual samples at least 10 percent of the time to monitor the performance of the analytical system.
- The lab uses spiked samples to monitor accuracy in each sample batch.
  - The amount of additive is appropriate to the detection limit and sample concentration.
- Prepare and use accuracy control charts for each analytical procedure. The lab should develop accuracy control charts by collecting data for a minimum of 15 to 20 samples over an extended period of time.
  - Establish accuracy limits (as % recovery) based on standard deviations whose upper and lower control limits are established at three times the standard deviation above and below the central line.
  - Establish the upper and lower warning limits at twice the standard deviation above and below the central line. Note: Some parameters have a defined warning limit required by 40 *CFR* Part 136.
  - Take corrective actions when data fall outside the warning and control limits.
  - Document out-of-control data or situation and the corrective action taken.

Evaluation of Permittee Data Handling and Reporting

An analytical laboratory must have a system for uniformly recording, correcting, processing, and reporting data. The inspector should verify that the laboratory:

- Uses correct formulas to calculate the final results.
- Applies round-off rules are uniformly.
- Establishes significant figures for each analysis.
- Cross-checking calculations provisions are available.
- Determine control chart approaches and statistical calculations for the purposes of QC and reporting.
- The laboratory report forms provide complete data documentation and permanent recording, and they facilitate data processing.
- The program for data handling provides data in the form/units required for reporting.
- Maintain laboratory records for a minimum of 3 years (or longer and made available if requested by EPA or the State).

- Keeps laboratory notebooks or pre-printed data forms that are bound permanently to provide good documentation, including the procedures performed and the details of the analysis, such as the original value recorded, correction factors applied, blanks used, and the reported data values. The dated notes indicate who performed the tests and include any abnormalities that occurred during the testing procedure. Laboratory maintains the notes as a permanent laboratory record.

- Procedures for correction of data entry errors are defined. Original data entries can be read and the individual(s) making the corrections are clearly identified.

- Back up computer data with duplicate copies (i.e., electronic and hardcopy).

- Proper data handling and reporting procedures are implemented by all contract laboratories performing sample analyses.

- Maintain data records that allow the recalculation of all results reported by the laboratory(ies) from the original unprocessed results (i.e., raw data) to the final results sent to EPA and the regulatory authority for a minimum of three (3) years.

Evaluation of Permittee Laboratory Personnel

Analytical operations in the laboratory vary in complexity. Consequently, laboratory should clearly define work assignments in the laboratory. All analysts should be thoroughly instructed in basic laboratory operations. Those persons performing complex analytical tasks should be qualified and properly trained. All analysts must follow specified laboratory procedures and be skilled in using the laboratory equipment and techniques required for the analyses assigned to them. In evaluating laboratory personnel, the inspector should consider the following factors:

- Adequacy of training

- Skill and diligence in following procedures

- Skill and knowledge of staff in using equipment and analytical methods (particularly for complex equipment such as gas chromatography)

- Precision and accuracy in performing analytical tasks

- Assignment of clearly defined tasks and responsibilities.

Evaluation of Contract Laboratories

When the permittee contracts with the laboratory to analyze samples, the inspector may need to evaluate the laboratory practices at the contracted laboratory. The practices can also be evaluated by other designated EPA inspectors. If a deficiency is identified at a contract laboratory, the permittee is responsible for the deficiency and will be notified.

Overview of the Discharge Monitoring Report Quality Assurance Program and How It Relates to the Inspection Program

The validity of the National Pollutant Discharge Elimination System (NPDES) program depends on the quality of the self-monitoring program. The Discharge Monitoring Report Quality Assurance (DMR QA) program is an important tool used to ensure the quality of NPDES self-monitoring data. The program is designed to evaluate and improve the ability of laboratories serving NPDES permittees to analyze and report accurate self-monitoring data.

Majors must purchase under NPDES performance evaluation samples containing constituents normally found in industrial and municipal wastewaters from accredited providers . They must analyze these samples using the analytical methods and laboratory normally employed for their reporting of NPDES self-monitoring data. The supplier of the performance evaluation sample will evaluate the results and respond to the permittee.

Highlights

- The DMR QA Program has been an excellent means of focusing on and improving the quality of laboratory results used in developing DMR data. Improvements in the DMR QA data have been significant.

- This program has helped major permittees identify and correct both analytical and data handling problems in their laboratories.

- In general, permittees are receptive to the program and recognize its value, including some who challenged EPA's authority to require participation.

- Regions and States are generally supportive and have made good use of the results of this program for targeting inspections and directing other follow-up activities. This ability to concentrate corrective actions on problem permittees results in an increased efficiency in improving the self-monitoring data of all NPDES permittees.

- The program is one of the least resource-intensive methods for maintaining direct and regular technical contact with NPDES permittees. It has been recognized as a cost-effective effort.

- Utilizing computer technology, the following ways of managing and analyzing DMR QA data were started in FY 1985: compiling tracking summaries, comparing performance of the major industries, tracking multiple permittees, and regenerating past performance evaluation reports.

The DMR QA Program and the NPDES inspection programs are interdependent in several areas. First, to target the inspections, the regulatory agency can use DMR QA evaluations of permittee performance can be used, since the evaluations identify potential problems in laboratory analysis or data handling and reporting. This targeting helps to direct limited resources to permittees who need them most. Non-reporting of DMR QA results is an important trigger for on-site inspections.

The results are provide to and tracked by EPA and the State DMR QA coordinator.

Finally, EPA uses the Performance Audit Inspection (PAI), to follow up the DMR QA. The DMR QA results should be cross-checked with the permit prior to the onsite visit, and parameters that were failed should be checked by the inspector during a laboratory inspection.

This page left intentionally blank.

7. E. References and Laboratory Quality Assurance Checklist

References

American Society for Testing and Materials (ASTM). *Annual Book of Standards, Part 31, Water*. ASTM, Philadelphia, PA.

APHA, AWWA, and WEF. *Standard Methods for the Examination of Water and Wastewater*. (Use the most current, EPA-approved edition.)

Brown, E., M.W. Skougstad, and M.J. Fishman. 1970. *Methods for Collection and Analysis of Water Samples for Dissolved Minerals and Gases*. U.S. Geological Survey Techniques of Water Resources Inv., Book 5.

Delfino, J.J. 1977. "Quality Assurance in Water and Wastewater Analysis Laboratories." *Water and Sewage Works*, 124(7): 79-84.

U.S. Environmental Protection Agency. 1979a. *Handbook for Analytical Quality Control in Water and Wastewater Laboratories*. EPA-600/4-79-019.

Federal Register, Vol 51. No. 125, June 30, 1986. *Guidelines Establishing Test Procedures for the Analysis of Pollutants Under the Clean Water Act* (also see October 26, 1986).

Plumb, R.H., Jr. 1981. "Procedure for Handling and Chemical Analysis of Sediment and Water Samples." *Technical Report EPA/CE-81-1*.

United States Geologic Survey (USGS), United States Department of the Interior (USDI), Open File Report 85-495; 1906 (see 6/30/86 *FR* for full citation).

U.S. Environmental Protection Agency. 1979b. *Methods for Chemical Analysis of Water and Wastes*. EPA-600/4-79-020.

U.S. Environmental Protection Agency. April 1990. *NPDES Compliance Monitoring Inspector Training Laboratory Analysis Module*.

U.S. Environmental Protection Agency. 1997. *Methods and Guidance for Analysis of Water*. EPA 821-C-97-001.

U.S. Environmental Protection Agency. July 1998. *EPA Quality Manual for Environmental Programs.*

U.S. Environmental Protection Agency. July 1999. *Constitution, Bylaws, and Standards*. National Environmental Laboratory Accreditation Conference. EPA-600/R-99/068.

This page left intentionally blank.

LABORATORY QUALITY ASSURANCE CHECKLIST

A. GENERAL

Yes No N/A	1. Written laboratory QA manual available.

B. SAMPLE HANDLING PROCEDURES

Yes No N/A	1. Laboratory has sample custodian and a back-up custodian.
Yes No N/A	2. Access to laboratory area restricted to authorized personnel only.
Yes No N/A	3. Sample security area available within laboratory that is dry, clean, and isolated; has sufficient refrigerated space; and can be locked securely.
Yes No N/A	4. Custodian receives and logs in all incoming samples.
Yes No N/A	5. Follows established chain-of-custody procedures.
Yes No N/A	6. Checks of proper preservation, container type, and holding times performed by the custodian or the analysts with the results fully documented.
Yes No N/A	7. Samples properly stored by custodian.
Yes No N/A	8. Samples distributed to analysts by custodian only.
Yes No N/A	9. Transfer of samples fully documented.
Yes No N/A	10. Accurate and up-to-date care and custody records for handling samples maintained.
Yes No N/A	11. Documentation and procedures for disposal of test samples and test standards.

C. LABORATORY PROCEDURES

Yes No N/A	1. EPA-approved written analytical testing procedures used and protocols are easily accessible by laboratory personnel.
Yes No N/A	2. If alternate analytical procedures used, proper written approval obtained.
Yes No N/A	3. Calibration and maintenance of instruments and equipment satisfactory.
Yes No N/A	4. QA procedures used.
Yes No N/A	5. QC procedures adequate.
	6. Duplicate samples are analyzed % of time.
	7. Spiked samples are used % of time.
Yes No N/A	8. Whole Effluent Toxicity (WET) testing is required by the permit and conducted by the laboratory. Culturing procedures are adequately documented for each organism tested.
Yes No N/A	9. WET testing protocols are clearly described.
Yes No N/A	10. Commercial laboratory used. Name _____ Address _____ Contact _____ Phone _____

		Certification # _____

LABORATORY QUALITY ASSURANCE CHECKLIST
(Continued)

D. LABORATORY FACILITIES AND EQUIPMENT

Yes No N/A	1. Proper grade laboratory pure water available for specific analysis.
Yes No N/A	2. Adequate bench, instrumentation, storage, and recordkeeping space available.
Yes No N/A	3. Clean and orderly work area available to help avoid contamination.
Yes No N/A	4. Dry, uncontaminated compressed air available.
Yes No N/A	5. Sufficiently ventilate fume hood.
Yes No N/A	6. Laboratory sufficiently lighted and ventilated.
Yes No N/A	7. Adequate electrical sources available.
Yes No N/A	8. Instruments/equipment in good condition.
Yes No N/A	9. Use proper safety equipment (lab coats, gloves, safety glasses, goggles, and fume hoods) when necessary.
Yes No N/A	10. Written requirements for daily operation of instruments available.
Yes No N/A	11. Standards and appropriate blanks available to perform daily check procedures.
Yes No N/A	12. Sources of standards documented and where possible traceable to a national standard (e.g., NIST).
Yes No N/A	13. Records of each set of analysis including order in which calibration, QC and samples were analyzed (i.e., analysis run logs or instrument run logs) available.
Yes No N/A	14. Written troubleshooting procedures for instruments available.
Yes No N/A	15. Schedule for required maintenance exists.
Yes No N/A	16. Proper volumetric glassware used.
Yes No N/A	17. Glassware properly cleaned.
Yes No N/A	18. Properly store standard reagents and solvents with the expiration dates clearly displayed on the containers.
Yes No N/A	19. Frequently checked working standards.
Yes No N/A	20. Discard standards after recommended shelf-life has expired.
Yes No N/A	21. Background reagents and solvents run with every series of samples.
Yes No N/A	22. Written procedures exists for cleanup, hazard response methods, and applications of correction methods for reagents and solvents.
Yes No N/A	23. Replace gas cylinders at 100-200 psi.

LABORATORY QUALITY ASSURANCE CHECKLIST
(Continued)

E. LABORATORY'S PRECISION, ACCURACY, AND CONTROL PROCEDURES

Yes No N/A	1.	Analyzed multiple replicates (blanks, duplicates, spikes, and splits) for each type of control check and information recorded.
Yes No N/A	2.	Plotted precision and accuracy control methods used to determine whether valid, questionable, or invalid data are being generated from day to day.
Yes No N/A	3.	Generate control samples introduced into the train of actual samples to ensure that valid data.
Yes No N/A	4.	Precision and accuracy of the analyses are sufficient.

F. DATA HANDLING AND REPORTING

Yes No N/A	1.	Uniformly apply round-off rules.
Yes No N/A	2.	Establish significant figures for each analysis.
Yes No N/A	3.	Use provision for cross-checking calculation.
Yes No N/A	4.	Use correct formulas to calculate final results.
Yes No N/A	5.	Control chart approach and statistical calculations for QC and report available and followed.
Yes No N/A	6.	Report forms developed to provide complete data documentation and permanent records and to facilitate data processing.
Yes No N/A	7.	Data reported in proper form and units.
Yes No N/A	8.	Laboratory records readily available to regulatory agency for required time of 3 years.
Yes No N/A	9.	Laboratory notebook or pre-printed data forms bound permanently to provide good documentation.
Yes No N/A	10.	Computer data backed up with duplicate copies (i.e., electronic and hardcopy).
Yes No N/A	11.	Efficient filing system exists, enabling prompt retrieval of information and channeling of report copies.
Yes No N/A	12.	Data records allow recalculation of all results reported by the laboratory(ies) from the original unprocessed results (raw data) to the final results sent to EPA and the regulatory authority.

G. LABORATORY PERSONNEL

Yes No N/A	1.	Enough analysts present to perform the analyses necessary.
Yes No N/A	2.	Analysts have on hand the necessary references for EPA procedures being used.
Yes No N/A	3.	Analysts trained in procedures performed through formal or informal training or certification programs.

This page left intentionally blank.

8. TOXICITY

Contents Page

A. Objectives 8-1

B. Requirements of WET Testing 8-3
Types of WET Testing 8-3
WET Test Components 8-4
Effluent 8-4
Dilution Water 8-5
Test System 8-8
Test Organisms 8-9
Reference Toxicants 8-10
Conduct of the Test(s) 8-10
Recordkeeping and Data Reporting 8-11

C. Analysis of Results 8-15

D. References 8-19

List of Tables

8-1. Recommended Sampling Strategies for Continuous and Intermittent Discharges for Flow-Through, Static Renewal, and Static Toxicity Tests 8-7

Related Websites

Whole Effluent Toxicity (WET) Methods: http://www.epa.gov/waterscience/WET
Office of Wastewater Management (OWM) Homepage: http://www.epa.gov/owm

This page left intentionally blank.

8. A. Objectives

By definition, toxicity is a characteristic of a substance (or group of substances) that causes adverse effects in organisms. Adverse effects include an increased rate of morbidity (the rate of occurrence of disease) and mortality (the rate of occurrence of death), as well as those effects that limit an organism's ability to survive in nature, such as impaired reproductive ability or growth. Toxicity of a substance is measured by observing the responses of organisms to increasing concentrations of that substance. One substance is more toxic than another when it causes the same adverse effects at a lower concentration.

Whole Effluent Toxicity (WET) is a National Pollutant Discharge Elimination System (NPDES) permit parameter designed to evaluate the toxicity of the entire wastestream as opposed to just individual pollutants. The WET testing may be either performed or evaluated as part of one of five NPDES inspections:

- Compliance Evaluation Inspection (CEI)
- Compliance Sampling Inspection (CSI)
- Performance Audit Inspection (PAI)
- Toxics Sampling Inspection (XSI)
- Compliance Biomonitoring Inspection (CBI).

In addition, the toxicity of a municipal treatment plant effluent should be considered as part of the Pretreatment Compliance Inspection (PCI), especially if unacceptable levels of toxicity have been demonstrated and the cause of the toxicity has been investigated and found to be from industrial or commercial dischargers contributing to the system.

Methods manuals for Whole Effluent Toxicity testing can be accessed at:

http://www.epa.gov/waterscience/WET.

The inspector should understand the permittee's WET testing requirements so that the appropriate objectives can be met:

- Assess compliance with NPDES permit conditions
- Determine compliance with State water quality standards
- Consider overall Lab WET test performance (reference toxicants and other WET QA/QC requirements)
- Evaluate quality of self-monitoring data
- Assess adequacy of self-monitoring procedures
- Document presence or absence of toxic conditions
- Identify need to perform Toxicity Reduction Evaluation (TRE) and/or a Toxicity Identification Evaluation (TIE)
- Develop permit limits for WET, if appropriate

WET test reviews performed as part of a routine facility inspection are cursory. The intent is to quickly ascertain if the facility is following their permit requirements and, secondarily, to see if there are any obvious problems with reporting or lab performance. The following checklist provides some of the more obvious and quickly determined issues that can be addressed during a facility inspection.

- Does the facility have a copy of its NPDES permit readily available? (Although the inspector should bring a copy in the event the permittee cannot find his).
- Check the permit for the WET testing frequency and any special conditions related to WET testing, including whether a testing frequency decrease is authorized.
- Are *all* test reports for WET tests performed over the last three years available for review?
- Are the test reports complete (e.g., bench data sheets for chemicals and test organisms, chain of custody tags, statistical analyses, etc.)?
- Was the correct type test performed?
- Did effluent samples contain any measurable chlorine, or > 10 mg/l ammonia?
- Was the test initiated within 36 hours of the first test sample being grabbed or removed from the compositor? This can be verified by checking dates and times on chain-of-custody tags and bench sheets.
- Did the lab or permittee make any judgement decisions beyond their authority?
- Were there any aberrations in the test?
- Were the test results reported correctly to the permittee and on the DMR?
- Was the test invalid due to poor control performance?
- If the test was declared invalid, was a retest performed and reported?

In the case of a PAI, the laboratory performing the WET tests is evaluated, as well as the NPDES permittee. This type of inspection requires more extensive information than is presented in this section. The inspector is therefore referred to the Environmental Protection Agency's (EPA) *Manual for the Evaluation of Laboratories Performing Aquatic Toxicity Tests* (EPA-600/4-90/031) for the protocol to perform a PAI.

8. B. Requirements of WET Testing

Types of WET Testing

WET tests are techniques to determine the toxicity of a permittee's discharge or effluent by measuring the responses of organisms to a set of multi-concentration solutions of the effluent and dilution water. The WET test methods, as revised November, 2002, are specified in 40 *CFR* Part 136 and described in the WET methods manuals that can be accessed at http://www.epa.gov/waterscience/WET. Test designs may vary in number of organisms used, duration (acute or chronic) or in the way in which the effluent contacts the organism (flow-through, static, static renewal), depending on suspected toxicants present and how the results are to be used. Range finding (screening) tests normally use few organisms and a single effluent concentration. However, WET testing is usually performed as a definitive testing.

In a definitive test, several groups (replicates) of organisms are exposed for a predetermined length of time to a set of multi-concentration solutions of effluent and dilution water. The tests consist of a control and a minimum of five effluent concentrations, with four replicates of each dilution. See the WET methods manuals for more details. The response of each organism in each test concentration is observed and recorded, and the number of responses is analyzed in relation to the concentrations of effluent to which the organisms were exposed.

WET testing may be performed as either acute or chronic tests. The terms acute and chronic refer to the length of time that the organisms are exposed to the toxicant. The duration of the tests should be specified in the NPDES permit. Generally, acute tests measure short-term effects with impacts usually resulting in death or extreme physiological disorder. A response observed in 96 hours or less typically is considered acute. Chronic tests involve a stimulus that lingers or continues for a relatively long period, often one-tenth of a lifespan or more. Chronic should be considered a relative term depending on the lifespan of an organism. Typically most WET chronic tests run for seven days. Acute effects result in death. A chronic effect may result in death, stunted growth, or reduced reproductive rates.

Common test responses indicating the presence of toxic conditions include:

- Death — Increase in number of organisms killed by a test solution when compared to the control
- Growth — Measurement of reduction in growth compared to the control (including mean weight of an organism)
- Reproduction — Measurement of reduction in reproductive rates compared to the control
- Terata — Increase in number of gross abnormalities shown in early life stages compared to the control.

WET tests are also described according to the way in which organisms are physically exposed to test solutions. The terms flow-through, static renewal, and static are most commonly used to describe the test design type. In a flow-through test, effluent and dilution water are

mechanically renewed continuously. This test setup requires specialized equipment (a serial or proportional dilutor or syringe pumps) and is more costly to operate than a static test. In a static renewal test, the test solutions are replaced periodically (usually daily) with fresh effluent and dilution water. In a static test, the solutions used at the start of the test are not replaced for the test's duration. Both static renewal and static tests require less sophisticated equipment. The method of test design type should be specified in the NPDES permit for the acute test methods. The selection of test design type for the chronic test methods is pre-described in the test methods.

WET Test Components

The following discussions pertain primarily to issues in a lab audit.

WET tests consist of a number of components, as shown below:

- Effluent
- Dilution water
- Test apparatus
- Test organisms
- Reference toxicants
- Test results.

In simple terms, effluent and dilution water are combined in the test system with test organisms to produce test results. Each component including food items must be of a specific quality for successful toxicity testing. It is the inspector's job to determine (insofar as possible) from the information available, that the test components adhere to the standards specified in the NPDES permit or accepted reference method (e.g., EPA's WET methods at 40 *CFR* Part 136). Review of the permittee's sampling logbook, chain-of-custody forms, and contract lab reports should provide most of the information necessary to assess the quality of the test components.

Each component has specific requirements (e.g., sample location for the effluent, sample holding time, dilution water constituents, choice of test apparatus materials). Accurate and reproducible test results can only be expected when the critical test components are handled properly. It is, therefore, very important to understand the relationships between these test components and the critical factors that determine the acceptability of each from a quality assurance standpoint. Critical factors that would likely be encountered during a NPDES inspection are described in the following sections.

Effluent

Effluent sampling strategy will usually be specified in the NPDES permit. Effluent samples must be representative of the entire discharge and free of contamination from other sources. Samples collected for off-site toxicity testing are to be chilled to 0°-6°C during or immediately after collection, and shipped iced to the performing laboratory.

The type and frequency of samples taken (e.g., grab, composite) must be consistent with those required in the permit. For flow-through tests that are not done by pumping effluent directly into dilutors, daily sample sizes must be sufficient to supply the dilutor for periods ranging from 24 to 36 hours. This volume will depend on the type of test being conducted and the number of dilutions being run. For static renewal tests, daily sample volumes should be sufficient to replenish all dilutions in the test series and to provide separate vials of the dilutions to allow for dissolved oxygen (DO), pH, salinity, and other chemical analyses without contamination of the test dilutions. This volume will depend on the type of test being conducted and dilutions being run. Table 8-1 provides guidance as to representative sampling strategies for various situations. For some volatile toxicants that are acutely toxic (e.g., chlorine) standard composite sampling does not yield an effluent sample that is representative of the actual discharge due to volatilization of chlorine during sampling, shipping and holding. On-site flow-through testing would yield more appropriate test results where, considering available dilution, the effluent contains measurable amounts of chlorine.

Samples for onsite tests should be used immediately when practical, but must be used within 36 hours of collection. It is usually not possible to refrigerate the large-volume samples (200 liters or more) that are required for flow-through fish tests, but all other samples should be either iced or refrigerated if they are not to be used immediately. Note: hand-delivered samples used on the same day of collection do not need to be cooled at 0°-6°C prior to test initiation.

Samples to be used for offsite tests should be iced for shipment and refrigerated (0°-6°C) upon receipt by the testing laboratory. As a minimum requirement in all cases, tests should be initiated within 36 hours of collection. In the case of short-term chronic tests, samples taken on days one, three, and five may be held for a longer period of time to complete the test. In no case should any preservative be added to samples or chemical disinfection performed prior to being tested for toxicity, nor should samples be dechlorinated unless the permit specifically allows for sample dechlorination.

Dilution Water

The choice of dilution water is generally specified in the NPDES permit and depends on the purpose of the toxicity test. Synthetic dilution water is used to evaluate the inherent toxicity of the effluent. Dilution water from the receiving stream or a nontoxic equivalent is used to test for interactions after discharge. Receiving waters, synthetic waters, or synthetic waters adjusted to approximate receiving water characteristics may be used for dilution water, provided that the water meets the qualifications for an acceptable dilution water. Under no circumstances should the dilution water cause any toxic responses in test organisms. A lack of toxic responses in control organisms is evidence of the suitability of the dilution water. Control organisms should have less than or equal to 10 percent mortality in acute tests and less than or equal to 20 percent mortality for chronic tests. EPA manuals describe various techniques for the preparation of synthetic dilution water which may be necessary to use if the natural receiving water exhibits unacceptable levels of toxicity.

Dilution water obtained from receiving waters should be immediately used for testing. If it will not be used within 24 hours, it should be refrigerated (0°-6°C) as soon as it is collected. In any case, the receiving water should be used within 36 hours of collection. So that no appreciable change in toxic characteristics occurs before testing, the lapsed time (holding time) from sample collection to first use of the sample in test initiation must not exceed 36 hours unless a

variance has been granted. If holding is necessary, the samples must be stored under strict conditions (temperatures for WET samples as 0°-6°C). The location from which the dilution water was obtained should be noted in the permittee's sampling log. It should be upstream and out of the influence of the outfall. The location should be free of other sources of contamination (e.g., other outfalls).

Table 8-1

Recommended Sampling Strategies for Continuous and Intermittent Discharges for Flow-Through, Static Renewal, and Static Toxicity Tests*

CONTINUOUS DISCHARGE

TEST TYPE	CHRONIC	ACUTE Retention Time < 14 Days	ACUTE Retention Time >14 Days
Flow-through**	-	Two Grab samples daily (early a.m. and late p.m.)	One grab sample daily
Static renewal	3x 24-Hour composite samples, every other day	Four separate grab samples each day for four concurrent tests	One grad sample daily
Static	Single 24-Hour composite sample on first day	Four separate grab samples on first day for four concurrent tests	One grab sample on first day

* Sampling requirements should be clearly specified in the permit

* For flow-through tests, it is always preferable to pump directly to the dilutor

INTERMITTENT DISCHARGE

TEST TYPE	CHRONIC	ACUTE Continuous Discharge During 1 or 2 Adjacent 8-Hour Shifts	ACUTE Discharge From Batch Treatment	ACUTE Discharge to Estuary on Outgoing Tide
Flow-through	-	One grab sample midway through shifts daily	One grab sample of discharge daily	One grab sample of discharge daily
Static renewal	3x 24-Hour composite samples collected for duration of discharge unless discharge ceases	One grab sample midway through shifts on first day	One grab sample of discharge daily	One grab sample of discharge daily
Static	Composite sample collected for duration of discharge, first day	One grab sample midway through shifts on first day	One grab sample of discharge on first day	One grab sample of discharge on first day

Test System

WET tests may be performed in a fixed or mobile laboratory. Depending on the scope of the program, facilities may include equipment for rearing, holding, and acclimating test organisms. Temperature control is achieved using circulating water baths, heat exchangers, or environmental chambers. Appropriate dilution water may be groundwater, surface water, reconstituted water, or dechlorinated tap water. Holding, acclimation, and dilution water should be temperature controlled and aerated whenever possible. Air used for aeration must be free of oil and fumes; filters to remove oil in air are desirable. Test facilities must be well-ventilated and free of fumes. During holding, acclimating, and testing, test organisms should be shielded from external disturbances. Reference toxicants should be properly stored in a closed area separate from the WET testing areas.

Any materials that come into contact with either effluent or dilution water must not release, absorb, or adsorb toxicants. A number of different choices for test equipment are available. Glass and No. 304 or 306 stainless steel are generally acceptable for freshwater holding, mixing, and test chambers. Stainless steel, however, is not acceptable for saltwater systems. Square-sided glass aquaria should be held together with small beads of silicone adhesive, with any unnecessary adhesive removed from inside the aquaria. If stainless steel containers are used, they must be welded, not soldered. Other specialized containers of nitex or teflon are also acceptable. Tanks for storing effluents and dilution water may also be made of fiberglass. All containers or tubes made of these materials are reusable with appropriate cleaning (see below).

Polyethylene, polypropylene, polyvinyl chloride, polystyrene, and tygon may also be used for containers or tubing, but should be checked for toxicity before being used. Because these materials may absorb toxicants during a test, their reuse is discouraged to prevent absorbed toxicants from leaching into new effluent or dilution water.

Copper, galvanized metal, brass, lead, and rubber must not contact the testing solutions at any time.

New plasticware (from a known nontoxic source) can be used after rinsing with dilution water. New glassware should be soaked overnight in dilute (20 percent) nitric or hydrochloric acid, rinsed in tap water, and then rinsed with dilution water before use.

Glassware and stainless steel components that must be reused should be soaked in detergent and scrubbed (or washed in a laboratory dishwasher), rinsed twice with tap water, rinsed with dilute acid, rinsed twice with tap water, rinsed with full strength acetone, rinsed twice with tap water, and then rinsed with dilution water before use. Glassware for algae tests should be neutralized in sodium bicarbonate before use.

Test Organisms

Organisms used for toxicity testing are limited to certain species for which there are established testing protocols (EPA 40 *CFR* Part 136). Species commonly used in biomonitoring include daphnids, mysids, fathead minnows, silversides, and algae. The life stage, source, acclimation and feeding procedures, presence of disease, and the number of organisms placed in test chambers all affect the degree to which organisms respond to toxicants. Therefore, it is important that these factors comply with accepted test method procedures. Test conditions for various types of tests and organisms can be accessed at: http://www.epa.gov/waterscience/WET.

The inspector should ascertain, as closely as possible, that the following procedures are being observed:

- The correct organisms must be utilized in the test (most often as specified in the NPDES permit). "Wild" organisms are rarely appropriate in WET testing. Test organisms used in toxicity testing must be of known history, free of disease, and acclimated to test conditions. Culture information should be recorded. Test organisms must also be of the appropriate age. The appropriate number of organisms must be used in each test vessel.

- Test organisms should be fed according to the requirements for the particular type of test. When feeding is necessary for mysid or fish tests, excess food should be removed daily by aspirating with a pipette, to avoid problems such as food buildup leading to excessive oxygen demand.

- A daily log (that is a daily bench sheet for each test being performed) should be kept by the lab of feeding, reproduction, growth, mortality, and any abnormal behavioral observations.

- The following procedures must be adhered to (by the contract laboratory) for holding test organisms:

  - Test organisms purchased may be used to start mass cultures. However, if the organisms are to be used for testing then they must be no more than 48 hours old (if fish, purchased and shipped) and must be <24 hours old (fish, if not shipped, and freshwater invertebrates) at the start of the test. Freshwater invertebrates used in a test must also have all been released within an 8 hour period, to ensure reproductive performance is not impacted.

  - Maintain DO levels above 4 mg/L for warm water species and above 6 mg/L for cold water species.

- The laboratory should record the source of test organisms (hatchery, in-house, or elsewhere), as well as holding conditions (temperature, dissolved oxygen).

- Test organisms should be handled as little as possible to minimize stress:

  - Dip nets should be used for large organisms

- Pipettes should be used for transferring small organisms such as daphnids and midge larvae.

Reference Toxicants

Reference toxicants are used to evaluate the health and sensitivity of test organisms over time and for documenting initial and ongoing laboratory performance. A laboratory performs a definitive toxicity test with a reference toxicant at least once per month using each toxicity test method conducted in that month. The monthly results are plotted on a control chart to track trends in organism health or sensitivity.

EPA does not require the use of specific reference toxicants and does not set required acceptance ranges for reference toxicant testing. Testing laboratories must perform at least one acceptable reference toxicant test per month for each type of toxicity test method conducted in that month regardless of the source of test organisms. If a test method is conducted only monthly, or less frequently, a reference toxicant test must be performed concurrently with each effluent toxicity test to document ongoing laboratory performance and assess organism sensitivity and consistency when organisms are cultured in-house. When organisms are obtained from external suppliers, concurrent reference toxicant tests must be performed with each effluent sample, unless the test organism supplier provides control chart data from at least the past five months of reference toxicant testing, which will assess organism sensitivity and health. The method manuals require a laboratory to obtain consistent, precise results with reference toxicant toxicity tests with effluents under the NPDES permits.

An attempt should be made to match the type of reference toxicant used (e.g., metal or chlorinated organic) to the major pollutant in the wastewater tested. Reference toxicant data must be included with the contract lab report.

Reference toxicant test results should not be used as *de facto* criteria for rejection of individual effluent or receiving water tests. The methods manuals provide guidance for what to do when more than 1 reference test in 20 reference toxicant tests falls outside of control chart limits, or when a reference toxicant test result falls “well” outside of control limits. The laboratory should investigate sources of variability, take corrective actions to reduce identified sources of variability, and perform an additional reference toxicant test during the same month.

Conduct of the Test(s)

Test methods should be used by analysts experienced in the use or conduct of aquatic tests and the interpretation of data from aquatic toxicity testing. Test conditions should be those as specified in the summary of test condition tables provided for each method. Physical and chemical measurements taken during the test (e.g., temperature, pH, and DO) must be conducted at a minimum as specified in the method manuals. The test methods should follow the procedures as described in each test method section of the manual following the table of recommended test conditions. Test organisms should be obtained and added according to the guidance in any specific method.

Recordkeeping and Data Reporting

Proper recordkeeping is essential to an effective program. Chain-of-custody (COC) procedures should consistently be used to document sample transfer. Hand-written entries on bench sheets and COC tags must generally be clear and legible. The permittee should maintain a sample log containing information as to the date, time, and type of sample taken as well as the sampler's name. Unusual conditions should be noted. When evaluating the contract lab's data reporting, the inspector should verify that the following are included:

- Summary of test results, description of test conditions, material tested, and other data for quality assurance.
- Methods used for all analyses. The method title, method number and method source should be provided in the laboratory standard operating procedure (SOP) and test report. Tests must be conducted as stated in SOP and laboratory should verify test was conducted according to SOP.
- Date and time test started; date and time test terminated, type and volume of test chambers, volume of solution used per chamber, number of organisms per test chamber, number of replicate test chambers per treatment.
- The test temperature (mean and range), details of whether test was aerated or not, feeding frequency, and amount and type of food, any pH control measures taken.
- Any deviation from standard test methods. The test endpoint(s), and any deviation(s) from method must be clearly noted.
- The reference toxicity results for tests conducted for the test period with specific test details to verify species, temperature, and dilution water used in reference toxicant test.
- Any acclimation of test organisms (temperature mean and range) and the reason(s) for acclimation.
- Any other relevant information.

It is important that the contract lab to have a copy of the permittee's NPDES permit, including any modifications. By having a copy of the permit, the lab can better ensure that proper test procedures are being followed.

Any deviations from specifications should be documented and described in the data report by the testing laboratory. For WET test data submitted under NPDES permits, all required test conditions must be met or the test is considered invalid and must be repeated with a newly collected sample. Deviations from recommended test conditions must be evaluated on a case-by-case basis to determine the validity of test results. Deviations from recommended test conditions may or may not invalidate a test result depending on the degree of the departure and the objective of the test. Consideration of the degree of the deviation and the potential or observed impact of the deviation on the test result before rejecting or accepting a test result is valid. For example, if dissolved oxygen is measured below 4.0 mg/L in one test chamber, the reviewer should consider whether any observed mortality in that test chamber corresponded with the drop in dissolved oxygen. Whereas slight deviations in test conditions may not

invalidate an individual test result, test condition deviations that continue to occur frequently in a given laboratory may indicated the need for improved quality control in that laboratory.

Data for each test should be provided as the raw toxicity data in tabular form, including daily records of affected organisms in each concentration (including controls) and replicate, and in graphical form (plots of toxicity data) and include a table of LC_{50}s, NOECs, IC_{25}, IC_{50}, etc. (as required in the applicable NPDES permit). Records should indicate statistical methods used to calculate endpoints, and have a summary table of physical and chemical data. Testing laboratories should maintain quality assurance/quality control (QA/QC) control charts for percent minimum significant difference (PSMD) along with the statistical endpoints such as NOEC, LC50, EC25. Testing laboratories should regularly plot the individual raw test data and the average treatment responses to examine possible causes of excessive variability. For more information on possible contributing factors to WET variability and recommendation for reducing it, see sec 7.3 *of Understanding and Accounting for Method variability in Whole Effluent Toxicity Applications Under the National Pollutant Discharge Elimination System Program*, U.S. EPA, 2000. EPA/833/R-00/003.

The concentration-response relationship generated for each multi-concentration test must be reviewed to ensure that calculated test results are interpreted appropriately. All WET test results (from multi-concentration tests) reported under the NPDES program should be reviewed and reported according to USEPA guidance on the evaluation of concentration-response relationships (USEPA, 2000a). This guidance provides review steps for 10 different concentration-response patterns that may be encountered in WET test data. Based on the review, the guidance provides one of three determinations: that calculated effect concentrations are reliable and should be reported, that calculated effect concentrations are anomalous and should be explained, or that the test was inconclusive and the test should be repeated with a newly collected sample. It should be noted that the determination of a valid concentration-response relationship is not always clear cut. Data from some tests may suggest consultation with professional toxicologists and/or regulatory officials. Tests that exhibit unexpected concentration-response relationships also may indicate a need for further investigation and possible retesting. Each test must be reviewed to ensure that the test acceptability requirements have been met and that the data from the calculated test results are interpreted appropriately (USEPA, 2002a). Test review should include reviewing reference toxicant testing and the within-test variability should be reviewed. EPA's preferred method of data analysis is point estimation, but when NPDES permit require sublethal hypothesis testing endpoints, the within-in test variability must be reviewed and variability criteria applied. When tests are used for non-regulatory purposes, the variability is not required.

In addition to reviewing the concentration-response relationship, the within-test variability of individual tests should be reviewed. When NPDES permits require sublethal hypothesis testing endpoints (e.g., reproduction for the *Ceriodaphnia dubia* test), within-test variability must be reviewed and variability criteria must be applied as described in the chapter on “Report Preparation and Test Review” of each manual. Compare the PMSD measured in the test with the PMSD bounds listed in the report chapter. When the methods are used for non-regulatory purposes, the variability criteria are recommended but are not required, and their use (or the use of alternative variability criteria) may depend upon the intended uses of the test results and the requirements of any applicable data quality objectives and quality assurance plan.

Within-test variability is measured as the percent minimum significant difference (PMSD) and must be calculated and compared to the upper bounds that are established for test PMSDs. Tests conducted under NPDES permits that fail to meet this variability criteria and that show “no toxicity” at the permitted receiving water concentration (i.e., no significant difference from the

control at the receiving water concentration or above) are considered invalid and must be repeated on a newly collected sample. Lower bounds on the PMSD are also applied, such that test concentrations are not considered toxic (i.e., significantly different from the control) if the relative difference from the control is less than the lower PMSD bound.

To avoid penalizing laboratories that achieve unusually high precision, lower PMSD bounds are applied when a hypothesis test result (e.g., no observed effect concentration (NOEC) or lowest observed effect concentration (LOEC)) is reported. Lower PMSD bounds are based on the 10th percentiles of national PMSD data. The 10th percentile PMSD represents a practical limit to the sensitivity of the test method because few laboratories are able to achieve such precision on a regular basis and most do not achieve it even occasionally. In determining hypothesis test results, a test concentration is not considered toxic if the relative difference from the control is less than the lower PMSD bounds. See *Understanding and Accounting for Method variability in Whole Effluent Toxicity Applications Under the National Pollutant Discharge Elimination System Program*, U.S. EPA, 2000. EPA/833/R-00/003 for specific examples of implementing lower PMSD bounds. To reduce within-test variability and to increase statistical sensitivity when test endpoints are expressed using hypothesis testing rather than the preferred point estimation techniques, variability criteria must be applied during test review when NPDES permits require sublethal hypothesis testing endpoints NOEC or LOEC and the effluent is determined to have no toxicity at the permitted receiving water concentration.

This page intentionally left blank.

8. C. Analysis of Results

Each test manual has specified test acceptability criteria (e.g., minimum control survival) that must be achieved in order to have an acceptable test result. See the summary of test conditions and TAC for the specific test method section of the manual. In general, the valid interpretation of test results requires that control organisms meet minimum criteria for survival, growth, and/or reproduction.

Mortality in controls must not exceed 10 percent for acute toxicity tests and 20 percent for chronic tests (or other values as required by States through their regulations). If control survival does not meet 90 or 80 percent for an acute or chronic test, respectively, then results should not be used for calculating summary statistics, and a determination of compliance using the test results cannot be made. For chronic tests, control organisms also must meet minimum requirements for growth and reproduction contained in the methods. Tests not meeting the test control acceptability criteria (TAC) to achieve survival, growth, or reproduction are not valid. When using dual controls, the dilution water control should be used for determining the acceptability of the test and for comparisons with the tested effluent.

Each test manual has specified acceptable ranges of test conditions that are to be met, such as temperature, dissolved oxygen concentration, salinity, pH, light intensity and duration of photoperiod, organism loading (numbers or weight per volume), feeding, and cleaning procedures. Tests not meeting the other test conditions in the Summary of Test Conditions and TAC for the specific test method should be reviewed with caution and referred to the regional biologist. For each parameter discussed in these tables, the parameter is either recommended (i.e., must do) or required (i.e., should do). For example, the chronic *Ceriodaphnia dubia* test type is static renewal and specified as required. Meaning the test type for this test method must be static renewal. For WET test data submitted under NPDES permits, all required test conditions must be met or the test is considered invalid and must be repeated with a newly collected sample. The inspector should review the EPA methods manual for a more extensive discussion of each of these factors. The EPA methods manuals for Whole Effluent Toxicity testing can be accessed at: http://www.epa.gov/waterscience/WET.

After a test has met the required TAC and test conditions, the next step is data review (see chapter on “Report Preparation and Test Review” of each manual). Test review should be conducted on each test by both the testing laboratory and the regulatory authority.

The concentration-response relationship generated for each multi-concentration test must be reviewed to ensure that calculated test results are interpreted appropriately. EPA provides guidance on reviewing concentration-response relationships (USEPA, 2000). Test results that do not meet the expected pattern may be determined to be reliable, anomalous, or inconclusive.

Questionable results in an acute test include:

- Higher mortalities in lower concentrations than in higher concentrations of effluent
- 100 percent mortality in all effluent dilutions
- Greater percent mortality in the control than in the lower dilutions of effluent.

Questionable results in a chronic test include:

- Greater growth or reproduction or fewer terata at higher concentrations of effluent than at lower concentrations
- No growth or reproduction or 100 percent terata at all effluent concentrations
- Less growth or reproduction or more terata in controls than in lower effluent concentrations.

When any of these abnormalities occur (outside of experimental error), the results and test conditions should be reviewed by the regional biologist or NPDES toxicologist. It should be recognized, however, that often there will be minor variations in test results. For example, *Ceriodaphnia dubia* reproduction may be higher at intermediate concentrations that are not toxic but provide a greater food resource than lower concentrations. Thus, variations should not always be used to eliminate otherwise valid results. However, if the normally expected pattern is not found, summary statistics calculated on the results should be assessed with caution - see *Understanding and Accounting for Method variability in Whole Effluent Toxicity Applications Under the National Pollutant Discharge Elimination System Program*, U.S. EPA, 2000. EPA/833/R-00/003 for specific examples.

The test results need to be expressed such that compliance with the permittee's WET limits can be determined. For the NPDES Permit Program, the point estimation techniques are the preferred statistical methods in calculating end points for effluent toxicity tests.

The following definitions may help the inspector to interpret the results:

- The LC_{50} (for lethal concentration) is the calculated percentage of effluent (point estimate) at which 50 percent of the organisms die in the test period. Usually, the LC_{50} is calculated statistically by computer programs that fit the response curve to a mathematical function. Computer-based calculation procedures usually print an estimate of the error associated with the LC_{50} estimate.

- The EC_{50} (for effect concentration) is the calculated concentration (point estimate) at which 50 percent of the organisms show a particular effect (not necessarily death). For some species (e.g., *Ceriodaphnia dubia*) where the point of death is not certain, immobility is often used as a surrogate for death. Results for responses like the immobility responses in *Daphnia* may be reported as an EC_{50} (calculated in the same manner as the LC_{50}). Often, however, no distinction is made between the EC_{50} and the LC_{50} when the response is a surrogate for death.

- The No Observed Effect Concentration (NOEC) is the highest tested concentration at which the organisms' responses are not statistically different from the control organisms' responses. The NOEC [like the Lowest Observed Effect Concentration (LOEC) and Chronic Value (ChV) defined in the following paragraph] is normally determined only for chronic tests.

- The LOEC is the lowest tested concentration at which organisms' responses are statistically different from controls.

- The ChV is the calculated geometric mean of the NOEC and LOEC (the square root of the product of the NOEC and LOEC).

- The Inhibition Concentration (IC_{25}) is the calculated percentage of effluent (point estimate) at which the organisms exhibit a 25-percent reduction in a non-quantal biological measurement such as fecundity or growth.

- The percent response at a criterion concentration is reported. For example, the permit or standard may prohibit toxicity at 100 percent effluent or less. In this case, the observed percent response at 100 percent effluent would be reported.

- The response may be reported in Toxic Units (TU), either as Acute TUa or Chronic TUc.

There is an inverse relationship between toxicity and the effluent concentration percentage causing a toxic response. In other words, the same toxicity test response (e.g., LC_{50}), at lower percentages of effluent indicates higher toxicity than test results at higher percentages of effluent. TUs are defined as $100/LC_{50}$ for acute or 100/NOEC for chronic, with the LC_{50} or NOEC expressed as percent effluent. An effluent with an LC_{50} of 50% has an acute toxicity of 2.0 acute toxic units (100/50 = 2). Similarly, an effluent with a NOEC of 25% effluent has a chronic toxicity of 4 chronic toxic units (100/25). The major advantage of using toxic units to express toxicity test results is that toxic units increase linearly as the toxicity of the effluent increases. So the magnitude of a TU indicates the degree of toxicity. Therefore, an effluent with a TUa of 4 is twice as toxic as an effluent with a TUa of 2. EPA's Technical Support Document for Water Quality-based Toxics Control (EPA/505-2-90-01, 1991) provides a more extensice discussion of the application of toxic units and the relevance to NPDES permits. EPA's Technical Support Document (TSD, 1991) provides a more extensive discussion of the application of TU's and their relevance in an NPDES permit.

In addition to reviewing the concentration-response relationship, the within-test variability of individual tests should be reviewed. When NPDES permits require sublethal hypothesis testing endpoints (e.g., reproduction for the *Ceriodaphnia dubia* test), within-test variability must be reviewed and variability criteria must be applied as described in the chapter on "Report Preparation and Test Review" of each manual. Compare the PMSD mesaured in the test with the PMSD bounds listed in the report chapter. When the methods are used for non-regulatory purposes, the variability criteria are recommended but are not required, and their use (or the use of alternative variability criteria) may depend upon the intended uses of the test results and the requirements of any applicable data quality objectives and quality assurance plan.

See *Understanding and Accounting for Method variability in Whole Effluent Toxicity Applications Under the National Pollutant Discharge Elimination System Program*, U.S. EPA, 2000. EPA/833/R-00/003 for specific examples.

This page intentionally left blank.

8. D. References

U.S. Environmental Protection Agency. *Manual for the Evaluation of Laboratories Performing Aquatic Toxicity Tests.* EPA-600/4-90/031.

U.S. Environmental Protection Agency. March 1991. *Technical Support Document for Water Quality-based Toxics Control.* EPA/505-2-90-01

U.S. Environmental Protection Agency. April 1996. *Clarifications Regarding Flexibility in 40 CFR Part 136 Whole Effluent Toxicity (WET) Test Methods. (EPA Memorandum)*

U.S. Environmental Protection Agency. July 1997. *Memo - Clarifications Regarding Whole Effluent Toxicity Test Methods Recently Published at 40 CFR Part 136 and Guidance on Implementation of Whole Effluent Toxicity in Permits.*

U.S. Environmental Protection Agency. January 1999. *Errata for the Effluent and Receiving Water Toxicity Testing Manuals.* EPA-600/R-98/182.

U.S. Environmental Protection Agency, OST/EAD. February 1999. *Whole Effluent Toxicity: Guidelines Establishing Test Procedures for the Analysis of Pollutants, Whole Effluent Toxicity Tests; Final Rule, Technical Corrections.* 64 FR 4975.

U.S. Environmental Protection Agency, OWM/WPD. August 1999. *Toxicity Reduction Evaluation Guidance for Municipal Wastewater Treatment Plants.* EPA 833-B-99-002.

U.S. Environmental Protection Agency, OWM/WPD. June 2000. *Understanding and Accounting for Method Variability in Whole Effluent Toxicity Applications Under the National Pollutant Discharge Elimination System Program.* EPA 833-R-00-003.

U.S. Environmental Protection Agency, OST/EAD. July 2000. *Method Guidance and Recommendations for Whole Effluent Toxicity (WET) Testing* (40 *CFR* Part 136). EPA 821-B-00-004.

U.S. Environmental Protection Agency. March 2001. *Clarifications Regarding Toxicity Reduction and Identification Evaluations in the National Pollutant Discharge Elimination System Program.*

U.S. Environmental Protection Agency, OST/EAD. September 2001. *Final Report: Inter-laboratory Variability Study of EPA Short-term Chronic and Acute Whole Effluent Toxicity Test Methods, Vol. 1.* EPA 821-B-01-004.

U.S. Environmental Protection Agency, OST/EAD. September 2001. *Final Report: Inter-laboratory Variability Study of EPA Short-term Chronic and Acute Whole Effluent Toxicity Test Methods, Vol. 2: Appendix.* EPA 821-B-01-005.

U.S. Environmental Protection Agency, OWM/WPD and ORE. May 2001. *Clarifications Regarding Toxicity Reduction and Identification Evaluations in the NPDES Program.* (EPA memorandum and attachment)

9. PRETREATMENT

Contents Page

A. Review of the General Pretreatment Regulations 9-1
Development of 40 *CFR* Part 403 9-1
Summary and Background 9-1
Program Development and NPDES Requirements 9-2
Approval Authority Responsibilities 9-5
Control Authority Responsibilities 9-5
Industry Responsibilities 9-8

B. Pretreatment Compliance Inspections (PCIs) and Audits 9-17
Scope of PCIs and Audits 9-17
PCI Checklist Components 9-18
Summary of Audit Checklist Components 9-20

C. References 9-23
References 9-23

List of Tables

9-1. Summary of the General Pretreatment Regulations 9-10
9-2. Categorical Pretreatment Standards 9-15

List of Figures

9-1. Approval Authority vs. Control Authority 9-4

Related Websites

Office of Wastewater Management (OWM) Homepage: http://www.epa.gov/owm

This page intentionally left blank.

9. A. Review of the General Pretreatment Regulations

Development of 40 *CFR* Part 403

In addition to materials in this chapter, inspectors must be familiar with Chapter 1 - "Introduction" & Chapter 2 - "Inspection Procedures".

The Clean Water Act (CWA) requires the Environmental Protection Agency (EPA) to promulgate regulations to control the discharge of pollutants to the Nation's waters to preserve their physical, chemical, and biological integrity. The National Pollutant Discharge Elimination System (NPDES) program is the primary regulatory mechanism developed to control point-source discharges to the surface waters of the United States. The National Pretreatment Program is the mechanism developed to regulate nondomestic users who discharge pollutants to Publicly Owned Treatment Works (POTWs) that could pass through or interfere with the treatment plant, threaten worker health and safety, or contaminate sludges.

The General Pretreatment Regulations [40 *Code of Federal Regulations (CFR)* Part 403] were promulgated on June 26, 1978. The regulations were revised and repromulgated on January 28, 1981. Since publication of the rule in 1981, the regulations have continued to be revised. Amendments have been made to the regulations to clarify some aspects and to respond to the findings of the Pretreatment Implementation Review Task Force (PIRT) study conducted in 1984. Additional regulatory changes were promulgated on July 24, 1990 (*55 Federal Register* 30082) in response to recommendations made in the Domestic Sewage Study (DSS) and on July 17, 1997, (62 *FR* 38405-38415) to change procedures. A summary of the General Pretreatment Regulations is provided in Table 9-1. Major technical changes resulting from final regulatory amendments or court decisions are noted in this table.

Summary and Background

The three specific objectives cited in 40 *CFR* 403.2 of the General Pretreatment Regulations are to:

- Prevent the introduction of pollutants that would cause interference with the POTW or limit the use and disposal of its sludge
- Prevent the introduction of pollutants that would pass through the treatment works or be otherwise incompatible
- Improve the opportunities to recycle or reclaim municipal and industrial wastewaters and sludges.

In addition, improved POTW worker health and safety and reduction of influent loadings to sewage treatment plants are further objectives of pretreatment. Briefly stated, the definitions for interference and pass through are the following (see 40 *CFR* 403.3 for the exact definitions):

- Interference is a discharge that alone or in conjunction with other discharges, disrupts the POTW or sludge processes, uses, and disposal, and therefore in turn causes violation of any requirement of the POTW's NPDES permit or prevents the POTW from using its chosen sludge use or disposal practice.

- Pass through is a discharge that exits the POTWs to waters of the United States in quantities or concentrations which, alone or in conjunction with other discharges, causes a POTW NPDES permit violation.

The General Pretreatment Regulations detail the procedures, responsibilities, and requirements of EPA, States, POTWs, and industries. To achieve the objectives of the regulations, implementation of the program by all regulated entities must be accomplished. The specific responsibilities of each are explained below.

The term Publicly Owned Treatment Works or POTW means a treatment works as defined by section 212 of the Act, which is owned by a State or municipality (as defined by section 502(4) of the Act). This definition includes any devices and systems used in the storage, treatment, recycling and reclamation of municipal sewage or industrial wastes of a liquid nature. It also includes sewers, pipes and other conveyances only if they convey wastewater to a POTW Treatment Plant. The term also means the municipality as defined in section 502(4) of the Act, which has jurisdiction over the Indirect Discharges to and the discharges from such a treatment works.

Many of the specific prohibitions provide municipalities with the basis for instituting a proactive capacity, management, operation, and maintenance (CMOM) program, protecting the collection system from degradation due to explosion, corrosion, and obstruction. Particularly if locations of overflows (Sanitary Sewer Overflows {SSOs} and Combined Sewer Overflows {CSOs}) are predictable (based on facility history) and persistent, implementation of these pretreatment requirements should be evaluated.

Guidance manuals developed to assist EPA Regional Offices, States, POTWs, and industries with implementation of the General Pretreatment Program are listed in Section C, "References," of this chapter. In addition, policy memorandums from the EPA Office of Water Enforcement and Permits on pretreatment issues are listed.

Program Development and NPDES Requirements

Two terms are important in understanding the General Pretreatment Regulations: "Control Authority" and "Approval Authority." Control Authority directly regulates the significant industrial users (SIUs) (see glossary for definition) discharging to a POTW. The Control Authority is the POTW if the POTW has an approved pretreatment program. In the absence of an approved pretreatment program, the NPDES State is the Control Authority, if authorized by EPA. In the event neither the POTW nor the NPDES State has an approved pretreatment program, then EPA is the Control Authority. The Approval Authority oversees the development and implementation of POTW pretreatment programs and, for POTWs without an approved pretreatment program, is also the Control Authority that regulates industrial discharges to the POTW. The EPA Regional Office is the Approval Authority until a State is approved to administer the pretreatment program. Once a State is approved, the EPA Regional Office

maintains oversight responsibilities. See Figure 9-1 for a visual representation of Control Authority and Approval Authority.

The NPDES permit must include development and implementation requirements for POTWs required to develop a program. Those requirements will thereby become an enforceable component of the permit. Part 403.8 of the General Pretreatment Regulations details the responsibilities of a POTW during the development of a pretreatment program. Additional information on the responsibilities of Control Authorities is provided in the EPA *Guidance Manual for POTW Pretreatment Program Development* (1993) and subsequent EPA guidance manuals.

The Control Authority Pretreatment program is submitted to the Approval Authority, either the EPA Regional Office or the approved State. Once approval has been received the state or EPA amends the NPDES permit to require the Control Authority to implement the program.

Figure 9-1

Approval Authority vs. Control Authority

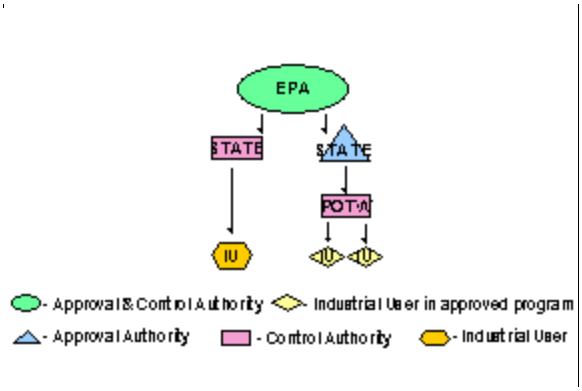

Delegated States

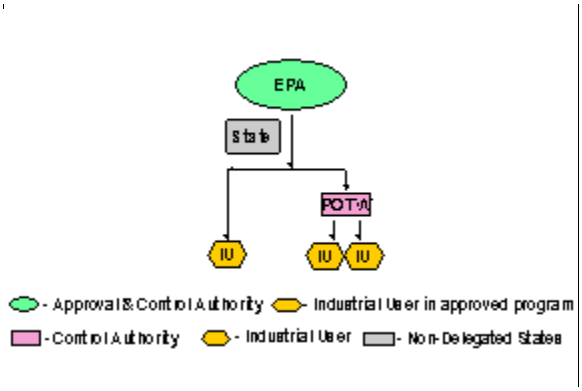

Non-Delegated States

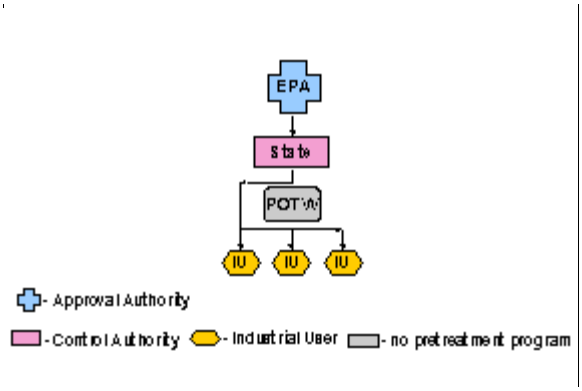

States Assuming Direct Responsibility

Approval Authority Responsibilities

The EPA Regional Office or an approved State administer a pretreatment program. The principal tasks for which an Approval Authority (EPA Regional Office or delegated State) is responsible are the following:

- Reviewing and approving POTW pretreatment programs and major modifications (see "Control Authority Responsibilities" for what Control Authority program development entails)
- Overseeing POTW program implementation, i.e., conducting Pretreatment Compliance Inspections (PCIs), audits, and annual report reviews
- Providing POTWs with technical assistance on the requirements of the General Pretreatment Regulations, categorical pretreatment standards, and POTW pretreatment program requirements
- Notifying POTWs of new and existing program requirements
- Determining SIU and POTW compliance with all applicable Federal requirements
- Applying and enforcing pretreatment standards and requirements at industries discharging to POTWs that do not have an approved local pretreatment program
- Initiating enforcement action against noncompliant POTWs or industries.

Part 403.10 of the General Pretreatment Regulations identifies the requirements a State must meet to receive approval of the pretreatment program as part of its NPDES authority, that is, to become an Approval Authority. For States preferring to assume the responsibility of directly regulating industries discharging to POTWs and, hence, being considered the Control Authority in lieu of POTWs within the State, 40 *CFR* 403.10(e) provides that option.

Control Authority Responsibilities

Before a Control Authority pretreatment program is approved, the Approval Authority (EPA or state) is the Control Authority for industries discharging to the POTW. After program approval, the Control Authority becomes responsible for implementing the requirements specified in the General Pretreatment Regulations [40 *CFR* 403.8(f)], the POTW pretreatment program, and the requirements of the NPDES permit. Note the permittee must comply with the permit regardless of program approval. To fully implement the pretreatment program throughout the entire service area, the Control Authority has responsibilities related to several specific areas:

- Legal authority
    - Deny or place a new or increased discharge condition

- Require industrial users (IUs) to comply with applicable pretreatment standards and requirements
- Require development of compliance schedules
- Carry out all inspection, surveillance, and monitoring procedures to determine industrial user compliance
- Enter premises of industrial users
- Apply Federal pretreatment standards to IUs
- Seek injunctive relief for noncompliance
- Seek or assess civil or criminal penalties of at least $1,000 a day per violation
- Immediately halt a discharge that presents or appears to present an imminent endangerment to the health or welfare of persons or to the environment or that threatens to interfere with the POTW's operation
- Comply with confidentiality requirements
- Develop and enforce an adequate sewer use ordinance
- Control through permit order, or similar means, the contribution to the POTW by each industrial user. Individual control mechanisms that contain minimum required elements must be issued to significant industrial users.

• Pretreatment standards

- Identify and locate all possible industrial users that may be subject to the pretreatment program
- Identify the character and volume of pollutants contributed to the POTW
- Establish and periodically reevaluate local limits to ensure protection of the POTW from interference or pass through and to ensure the use or disposal of POTW sludge
- Notify all industrial users of appropriate pretreatment standards, any changes to the regulations, and requirements of the Resource Conservation and Recovery Act (RCRA)
- Update the industrial survey to identify new industries that should be regulated by the POTW pretreatment program, and identify changes in manufacturing processes and wastewater discharge characteristics at existing facilities
- Comply with public participation requirements.

- Industrial user compliance and enforcement
  - Establish reporting, inspection, and monitoring requirements and procedures to enable evaluation of compliance, including proper QA/QC and chain-of-custody procedures for sampling and analysis
  - Inspect and sample industrial users. At a minimum, significant industrial users must be sampled and inspected at least once a year
  - Evaluate each significant industrial user at least once every 2 years for the need for a slug discharge control program
  - Perform sampling and analysis in a manner to produce evidence admissible in enforcement proceedings or in judicial actions.
  - Develop and implement an enforcement response plan to guide compliance evaluation and enforcement activities
  - Evaluate industry compliance by reviewing and analyzing industrial user self-monitoring reports and Control Authority monitoring data
  - Investigate instances of noncompliance
  - Initiate appropriate enforcement action to bring users into compliance
  - Establish other procedures as required and/or determined to be needed to regulate the significant industries discharging to the POTW.
- Public participation
  - Publish at least annually, in the local newspaper with the greatest circulation, a list of the industrial users that were in significant noncompliance within the past 12 months as defined in 40 *CFR* 403.8(f)(2)(vii)
  - Notify the public of any changes to the sewer use ordinance or local limits after approval by the Approval Authority
  - Submit pretreatment program modifications to Approval Authority.
- Data management
  - Maintain records of pertinent industrial user activities and compliance status
  - Maintain a current understanding of the categorical pretreatment standards and General Pretreatment Regulations, and notify industries of any changes
  - Provide the Approval Authorities with any reports required.

- Resources
  - Provide adequate resources and qualified personnel for program implementation

As pretreatment needs change, the Control Authority may need to revise the approved program. When this occurs, the Control Authority should submit the modifications to the Approval Authority for review and approval.

Industry Responsibilities

Industrial dischargers to POTWs must comply with the following:

- Prohibited discharge standards—The general and specific prohibited discharge standards (40 *CFR* 403.5) noted in Table 9-1.
- Appropriate pretreatment standards—Categorical pretreatment standards (40 *CFR* Parts 405-471), State requirements, or locally developed discharge limitations as per 40 *CFR* 403.5.
- Reporting requirements—As specified in 40 *CFR* 403.12 and/or by the POTW. The requirements provided in 40 *CFR* 403.12 are summarized in Table 9-1.

The types of industrial facilities that are categorical industries are listed in Table 9-2. EPA has developed categorical pretreatment standards for these industries based on the type of wastes produced by the manufacturing processes at each type of industry, the wastewater control technologies available to the industry, and economic considerations. The categorical pretreatment standards developed apply to the wastewaters from specific manufacturing processes. The standards apply at the point of discharge from the pretreatment unit for the regulated process, or if there is no pretreatment unit, they apply at the end of the regulated process.

Where the Control Authority has determined that specific limitations for certain pollutants of concern are needed to protect the POTW from interference, pass through, and sludge contamination, the Control Authority must develop and enforce such limitations. These local limitations generally are applied at the point where the industrial facility discharges to the POTW.

An industry must meet the more stringent pretreatment standard for each pollutant. For a categorical industry, this will be the categorical pretreatment standard or a local limit for each pollutant regulated. If the point at which the Control Authority's limitation applies is not the same as the point at which the categorical pretreatment standard applies, the control authority will have to either compare a calculation to adjust the categorical pretreatment standard to the discharge limitations or sample at both points so that they can determine compliance with categorical standards and local limits.

When evaluating the pretreatment standards to determine the appropriate limitation, the inspector should note that different categorical pretreatment standards were developed for each type of industry. If the industry combines the flows from more than one regulated process or

combines a regulated process flow with other flows before these wastes are treated, the Control Authority and the industry must adjust the categorical pretreatment standard using the Combined Wastestream Formula (CWF). The equation is provided in 40 *CFR* 403.6(e) of the

General Pretreatment Regulations. If the wastewaters are mixed after treatment, the categorical pretreatment standards must still be adjusted, in this case by flow weighted averaging of all flows introduced prior to the sample point. In either case, the resulting alternative limit cannot be set below the level of detection for that pollutant. Additional information on the combined wastestream formula and the flow weighted averaging formula is provided in EPA's *Guidance Manual for Implementing Production-Based Pretreatment Standards and the Combined Wastestream Formula* (1985).

Categorical industries have specific reporting requirements as per 40 *CFR* 403.12. A summary of the reports that categorical industries are required to submit is provided in Table 9-2. A Control Authority may require additional reports from all industries discharging to the system, including categorical industries.

Table 9-1

Summary of the General Pretreatment Regulations

403.1	Purpose and Applicability
403.2	Objectives of General Pretreatment Regulations
403.3	Definitions
403.4	State or Local Law
	The Federal General Pretreatment Regulations are not meant to affect any State or local regulatory requirements as long as these requirements are at least as stringent as the Federal regulations.
403.5	National Pretreatment Standards: Prohibited Discharges
	This section specifies general and specific prohibited discharge standards that Control Authorities must incorporate into their pretreatment programs. The general prohibitions specify that pollutants introduced into POTWs by a nondomestic source shall not pass through the POTW or interfere with the operation or performance of the works. The section provides that Control Authorities required to develop local pretreatment programs and POTWs where interference and pass through are likely to recur develop and enforce specific limitations (local limits) to implement the general prohibitions against interference, pass through, and sludge contamination.
	The specific prohibitions specify prevention of discharge of pollutants that cause any of the following at the POTW:
	• Fire or explosion hazard, including no discharge with a closed-cup flashpoint of less than 60°C (140°F) using test methods in 40 *CFR* 261.21
	• Corrosive structural damage (no pH<5.0)
	• Obstruction to the flow in the POTW
	• Interference
	• Heat causing inhibition of biological activity and temperatures at the POTW treatment plant to exceed 40°C (104°F)
	• Petroleum oils, nonbiodegradable cutting oils, or products of mineral oils in amounts that will cause interference or pass through
	• Fume toxicity or reactivity
	• Trucked or hauled pollutants except at designated discharge points.
	Additionally, industrial users are provided with an affirmative defense (if specified conditions are met) for actions brought against them for alleged violations of the general or specific prohibitions contained in this section.

Table 9-1

Summary of the General Pretreatment Regulations (Continued)

403.6	National Pretreatment Standards: Categorical Standards This section discusses development and implementation of categorical pretreatment standards including, but not limited to, compliance deadlines, concentrations and mass limits, prohibition of dilution as a substitute treatment, and the Combined Wastestream Formula (CWF) to determine discharge limitations.
403.7	Revision of Categorical Pretreatment Standards to Reflect POTW Removal of Pollutants This section (referred to as the removal credits provision) provides the criteria and procedures to be used by a POTW in revising the pollutant discharge limits specified in categorical pretreatment standards to reflect removal of pollutants by the POTW.
403.8	Pretreatment Program Requirements: Development & Implementation by POTW This section covers the requirements for pretreatment program development by a Control Authority. Included in this section are criteria for determining which POTWs must develop pretreatment programs, incorporation of approved programs and compliance schedules into NPDES permits, deadlines for program approvals, and program and funding requirements. 403.8(f) sets out the requirements of a POTW program. Specifically, it requires the Control Authority to have sufficient legal authority to enforce the approved pretreatment program. The section also discusses that all Control Authorities with approved programs, or programs under development, must develop and implement procedures to ensure compliance with the requirements of a pretreatment program.
403.9	Control Authority Pretreatment Programs and/or Authorization to Revise Pretreatment Standards: Submission for Approval This section discusses requirements and procedures for submission and review of Control Authority pretreatment programs. Included in this section are discussions of conditional program approval, approval authority action, and notification where submissions are defective.
403.10	Development and Submission of NPDES State Pretreatment Programs This section discusses requirements and procedures for submission and review of NPDES State pretreatment programs. Included in this section are discussions of approvals and deadlines for State programs, legal authority, program and funding requirements, and contents of program submissions.
403.11	Approval Procedures for Control Authority Pretreatment Programs and Revision of Categorical Pretreatment Standards This section provides the administrative procedures for the review and approval or denial of Control Authority pretreatment program submissions and requests for removal credit authority.

Table 9-1

Summary of the General Pretreatment Regulations (Continued)

403.12	Reporting Requirements for POTW s and Industrial Users This section presents reporting requirements for Control Authorities and industrial users. Reports required by industrial users include the following: • Baseline Monitoring Report (BMR). Due to the Control Authority within 180 days of the effective date of the categorical pretreatment standards (40 *CFR* 403.6). In addition, new source BMR reporting requirements are discussed in this section. • Compliance schedule progress reports. Due to the Control Authority within 14 days of completion of compliance schedule milestones or due dates. • 90-day compliance report. Due to the Control Authority within 90 days of the compliance date of the categorical standards. • Periodic reports on continued compliance. Due to the Control Authority at least semiannually, usually in June and December after the compliance date. • Notices of potential problems including slug loadings. Due to the Control Authority immediately upon identification of discharges, including slug loadings that could cause problems to the POTW for both noncategorical and categorical industries. • Notice of changed discharge. Due to the Control Authority from categorical and noncategorical users in advance of any significant change in volume or character of pollutants discharged. • Notice of violation and resampling. Notification due to the Control Authority within 24 hours of noting a violation; results of resampling due within 30 days. • Notification of hazardous waste discharge. Notification to the POTW, EPA, and State Hazardous Waste authorities of the hazardous wastes discharges to the POTW. Reports required from Control Authorities include the following: • Compliance schedule (for development of pretreatment programs) progress reports • Annual POTW reports. Also discussed in detail in this section are monitoring requirements for industrial users and signatory and recordkeeping requirements for Control Authorities and industrial users.

Table 9-1

Summary of the General Pretreatment Regulations (Continued)

403.13	Variances from Categorical Pretreatment Standards for Fundamentally Different Factors This provision allows an industrial user, or any interested person, to request a variance for the establishment of limits either more or less stringent than that required by a categorical pretreatment standard. The primary criterion required for approval of this variance is that the factors relating to the industrial user's discharges be fundamentally different from factors considered by EPA in establishing categorical pretreatment standards for these discharges.
403.14	Confidentiality This section covers confidentiality requirements and prohibitions for EPA, States, and Control Authorities. Effluent data are available to the public without restriction.
403.15	Net/Gross Calculation This provision provides for adjustment of categorical pretreatment standards to reflect the presence of pollutants in the industrial user's intake water.
403.16	Upset Provision This provision is consistent with the NPDES regulations and allows an upset of an industry's pretreatment system (which meets the conditions of an upset as specified in this provision) to be an affirmative defense to an action brought for noncompliance with categorical pretreatment standards. The industrial user shall have the burden of proof for such a defense.
403.17	Bypass This provision requires industrial users to operate their treatment systems at all times and includes criteria for allowing a bypass to occur and notification procedures for both an anticipated and unanticipated bypass.
403.18	Modification of Control Authority Pretreatment Programs This provision specifies procedures and criteria for "minor" and "substantial" modifications to approved Control Authority pretreatment programs and incorporation of substantial modifications into the Control Authority.
403.19	Provisions of specific applicability to the Owatonna Waste Water Treatment Facility This section provides specific regulatory requirements for the Owatonna Waste Water Treatment Facility and its participating Industrial Users to implement a project under the Project XLC program in Steele County, Minnesota. This project requires includes legal authorities and requirements that are different than the administrative requirements otherwise specified in 40 *CFR* Part 403.
403.20	Pretreatment Program Reinvention Pilot Projects Under Projects XL This section provides administrative procedures to allow any POTW with a final "Project XL" agreement to implement a Pretreatment Program that includes legal authorities and requirements that are different than the administrative requirements otherwise specified in 40 *CFR* Part 403.

Table 9-1

Summary of the General Pretreatment Regulations (Continued)

Appendix A	Program Guidance Memorandum This memorandum summarizes the Agency's policy on the use of construction grants for treatment and control of combined sewer overflows and storm water discharges.
Appendix B	[Reserved]
Appendix C	[Reserved]
Appendix D	Selected Industrial Subcategories Considered Dilute for Purposes of the Combined Wastestream Formula (previously titled "Selected Industrial Subcategories Exempted from Regulation Pursuant to Paragraph 8 of the NRDC v. Costle Consent Decree" The Appendix D published on January 21, 1981, provided a list of industrial subcategories that had been exempted (pursuant to paragraph 8 of the NRDC vs. EPA Consent Decree) from regulation by categorical pretreatment standards. Appendix D was revised on October 9, 1986, to update the list of exempted industrial categories and to correct previous errors by either adding or removing various subcategories or by changing the names of some categories or subcategories. Each of the subcategories, as indicated by the revised Appendix D title, contains wastestreams that are classified as dilute for purposes of applying categorical pretreatment standards to other wastestreams and for using the combined wastestream formula to adjust these standards.
Appendix E	Sampling Procedures This appendix provides a general description of composite and grab sampling procedures.
Appendix F	[Reserved]
Appendix G	Pollutant Eligible for a Pollutant Credit

Table 9-2

Categorical Pretreatment Standards

Industrial Categories With Categorical Pretreatment Standards in Effect			Effluent Guidelines Currently Under Development*
	N	Aluminum Forming (Part 467)	
E	N	Battery Manufacturing (Part 461)	• Metal Products and Machinery
E	N	Builder's Paper and Board Mills (Part 431)	• Pulp, Paper, and Paperboard, Phases 2 and 3
E	N	Carbon Black Manufacturing (Part 458)	• Meat Products
E	N	Centralized Waste Treatment (Part 437)	• Aquatic Animal Production
	N	Coil Coating (Part 465)	
E	N	Copper Forming (Part 468)	
E	N	Electrical and Electronic Components (Part 469)	
E		Electroplating (Part 413)	
E	N	Fertilizer Manufacturing (Part 418)	
	N	Glass Manufacturing (Part 426)	
	N	Grain Mills Manufacturing (Part 406)	
	N	Ink Formulating (Part 447)	
	N	Inorganic Chemicals (Part 415)	
E	N	Iron and Steel Manufacturing (Part 420)	
E	N	Leather Tanning and Finishing (Part 425)	
E	N	Metal Finishing (Part 433)	
E	N	Metal Molding and Casting (Part 464)	
E	N	Nonferrous Metals Forming and Metal Powders (Part 471)	
E	N	Nonferrous Metals Manufacturing (Part 421)	
E	N	Organic Chemicals, Plastics, and Synthetic Fibers (Part 414)	
E	N	Paint Formulating (Part 446)	
N	N	Paving and Roofing Materials (Part 443)	
E	N	Pesticide Chemicals (Part 455)	
E	N	Petroleum Refining (Part 419)	
E	N	Pharmaceutical Manufacturing (Part 439)	
E	N	Porcelain Enameling (Part 466)	
E	N	Pulp, Paper, and Paperboard (Part 430)	
	N	Rubber Manufacturing (Part 428)	
	N	Soap and Detergent Manufacturing (Part 417)	
E	N	Steam Electric Power Generating (Part 423)	
E	N	Timber Products Processing (Part 429)	
E	N	Transportation Equipment Cleaning (Part 442)	
E	N	Waste Combustors (Part 444)	

E = Standards in effect for existing sources.
N = Standards in effect for new sources.

*From August 2000, Effluent Guideline Plan [304(m)].

This page intentionally left blank.

9. B. Pretreatment Compliance Inspections (PCIs) and Audits

Scope of PCIs and Audits

The Pretreatment Compliance Inspection (PCI), the pretreatment program audit, and the program performance report (submitted at least annually by the POTW) provide an opportunity for EPA and State officials to assess the program and determine compliance of the Control Authority's pretreatment program.

EPA uses the PCI is to evaluate Control Authority compliance monitoring and enforcement activities. The inspector also determines whether any changes have been made to the Control Authority program since the last PCI, audit, performance report (i.e., annual report), or Control Authority modification request for approval. The NPDES inspector collects information on Control Authority program implementation for further evaluation by compliance personnel.

The inspector may conduct the PCI in conjunction with other NPDES inspections to conserve travel resources and allow integration of information on a POTW's operations. PCIs are compatible with Compliance Evaluation Inspections (CEIs), Compliance Sampling Inspections (CSIs), Performance Audit Inspections (PAIs), Diagnostic Inspections (DIs), and other nonroutine inspections, such as Toxics Sampling Inspections, and Compliance Biomonitoring Inspections. The inspector may combine a PCI with a site visit regarding sludge compliance as discussed in Chapter Ten.

Note that the POTW personnel involved in a CSI may be different from the ones involved in a PCI. Also, PCIs and audits rely heavily on file and record reviews to evaluate the Control Authority's pretreatment program. These records may have little bearing on the sampling inspection of the treatment facility. This distinction of a PCI to a CSI should be addressed during planning for the inspection.

Audits provide as a comprehensive review of the Control Authority pretreatment program. The audit addresses all of the items covered in a PCI but in greater detail. Consequently, the audit is more resource intensive than the PCI.

Procedures for conducting PCIs and audits are similar. In general, there are three major components:

- Pre-visit preparation for the PCI or audit
    - Coordination with the EPA Regional or State Pretreatment Coordinator
    - Review of background information: approved program, Control Authority annual reports (if available), NPDES permit compliance status, Control Authority fact sheet, previous inspection reports, and program modification requests from the Control Authority

- Notification of Control Authority (if appropriate).

- Onsite

  - Entry (presenting credentials)
  - Opening conference with Control Authority officials
  - Review of pretreatment files
  - Industrial inspections (optional)
  - Interview of officials using PCI or audit checklist
  - Tour of POTW (optional)
  - Closing conference.

- Follow-up

  - Preparation of report
  - Water Enforcement National Data Base (WENDB) data entry into PCS
  - Reportable Noncompliance/Significant Noncompliance (RNC/SNC) determination
  - Follow-up letter to the Control Authority
  - Enforcement action (when necessary)
  - NPDES permit or program modifications (when necessary).

If a PCI is conducted with an unannounced NPDES inspection, it also may be unannounced, but the Control Authority officials should be notified of the PCI upon arrival of the inspection team. At many POTWs, personnel responsible for implementing the program may not be the same as those operating the treatment plant.

The protocol involved in the onsite portion of the inspection is comparable to that of other NPDES inspections. The Pretreatment Program PCI or audit includes a tour of industrial facilities discharging to the POTW. This aspect is unique to the Pretreatment Program. The tour is optional for PCI, but mandatory for audits and may be included to evaluate the Control Authority's procedures for properly categorizing, monitoring and inspecting industries. For more detailed information on conducting PCIs and audits, refer to EPA's *Guidance for Conducting a Pretreatment Compliance Inspection* (September 1991), and *Control Authority Pretreatment Audit Checklist and Instructions* (May 1992).

See the PCI and audit guidance manuals, respectively for detailed checklists.

PCI Checklist Components

EPA developed the PCI checklist to assist NPDES inspectors in conducting and documenting the PCI. The checklist consists of the following sections:

- Cover page—Provides space for Control Authority name, address, and representatives present, as well as the date(s) of the inspection and inspectors' names, titles, and telephone numbers.

- Section I: Industrial User File Evaluation—This section documents problems or deficiencies noted during review of industrial user files. Generally, the inspector reviews the files to determine whether the Control Authority has notified the industrial user of applicable categorization and requirements, issued an adequate control mechanism,

properly applied pretreatment standards, conducted sufficient compliance monitoring activities, and taken appropriate enforcement actions for violations.

- Section II: Supplemental Data Review/Interview—The inspector completes this section by interviewing the appropriate Control Authority personnel and enables the inspector to determine compliance with program requirements not easily determined by the file review or to acquire additional information. This section contains questions on the following six pretreatment program areas:

  - Control Authority Pretreatment Program Modifications
  - Industrial User Characterization
  - Control Mechanism Evaluation
  - Application of Pretreatment Standards and Requirements
  - Compliance Monitoring
  - Enforcement.

- Section III: Evaluation and Summary—This section consists of the same six pretreatment program areas listed above and allows the inspector to summarize deficiencies noted and any corresponding required and/or recommended corrective actions.

- Attachment A: Pretreatment Program Status Update—This section provides an update of the pretreatment program's status. It should be updated prior to the PCI, based on information from the most recent PCI or audit and latest pretreatment program performance report and should be revised during the inspection based on information obtained during the PCI, if necessary.

- Attachment B: Pretreatment Program Profile—This section provides information on the Control Authority's approved pretreatment program, NPDES permit conditions, and applicable pretreatment regulations.

- Attachment C: Worksheets

  - WENDB Data Entry Worksheet—The WENDB data elements provide information to be entered in the Pretreatment Permits and Enforcement Tracking System (PPETS). This management information system tracks the permit compliance and enforcement status of approved pretreatment programs.

  - Reportable Noncompliance (RNC) Worksheet—This worksheet evaluates whether the Control Authority is in RNC for failure to implement its approved pretreatment program.

  - IU Site Visit Report—This report documents any industrial user site visits that were conducted as part of the PCI.

  - IU File Evaluation Worksheets—These optional worksheets assist the inspector in documenting and quantifying the Control Authority's performance in applying standards, compliance monitoring, and enforcement activities.

In addition to the completed checklist, the inspector will include other materials collected during the PCI in the final report as appendices, e.g.,:

- Example of Control Authority control mechanism or enforcement actions
- Names of industries that were not sampled or inspected in the past year
- Control Authority's Enforcement Response Plan (ERP)
- Annual list of industrial users in significant noncompliance.

See the EPA's *Guidance for Conducting a Pretreatment Compliance Inspection* (September 1991) the PCI checklist . The manual goes through each checklist section individually and explains the intent of the questions. As noted earlier, the manual provides more detailed information concerning the procedures for conducting the PCI.

Summary of Audit Checklist Components

The audit checklist has been developed to assist with a detailed review of a POTW pretreatment program, including pretreatment program modification, legal authority, industrial user characterization, control mechanism evaluation, application of pretreatment standards and requirements, compliance monitoring, enforcement, data management/ public participation, resources, and environmental effectiveness/pollution prevention. The audit checklist is divided into the following sections:

- Cover page
- Section I: Industrial User File Evaluation
- Section II: Data Review/Interview/Industrial User Site Visits
- Section III: Findings
- Attachment A: Pretreatment Program Status Update
- Attachment B: Pretreatment Program Profile
- Attachment C: Worksheets
  - Industrial User Site Visit Data Sheet
  - WENDB Data Entry Worksheet

- RNC Worksheet.

The audit checklist collects more detailed information than the PCI checklist and, as with the completed PCI checklist, also may be augmented by additional audit data:

- NPDES pretreatment permit conditions
- Control Authority enforcement documents with pretreatment requirements (i.e., administrative order, consent decree)
- Locally developed discharge limitations as included in the approved program (or any limits that have been changed by the Control Authority)
- Copy of sewer use ordinance if different from that in the approved program
- Control Authority sampling and inspection schedule for regulated industries
- List of industries not sampled or inspected in the past year
- Control Authority chain-of-custody form
- List of noncompliant industries and history of enforcement actions taken
- Annual list of industrial users in significant noncompliance.

The audit checklist is part of the *Control Authority Pretreatment Audit Checklist and Instructions* (May 1992). The manual provides specific guidance on conducting an audit and using the checklist.

This page intentionally left blank.

9. C. References

EPA's *Guidance for Conducting a Pretreatment Compliance Inspection* (September 1991) contains a comprehensive list of reference materials (publications and memorandums) available from U.S. EPA or the Pretreatment Coordinator in your Region. **References published since the publication of the Pretreatment Guidance are listed below.**

Checklists for conducting pretreatment compliance inspections and audits are provided in EPA's *Guidance for Conducting a Pretreatment Compliance Inspection* (September 1991) and *Control Authority Pretreatment Audit Checklist and Instructions* (May 1992). The checklist provides a list of questions that should be considered during an audit or PCI. The inspector should contact the Regional or State Pretreatment Coordinator before a PCI or an audit is done.

References

Memoranda

Applicability of pH Waivers to Pretreatment Standards (May, 13, 1993).

Determining Industrial User Significant Noncompliance (January 17, 1992).

Determining Industrial User Compliance Using Split Samples (January 21, 1992).

Statistical Assessment of National Significant Industrial User Noncompliance (July 23, 1992).

Use of Grab Samples to Detect Violations of Pretreatment Standards (October 1, 1992).

Using Split Samples to Determine Industrial User Noncompliance (April 12, 1993).

EPA Guidance

U.S. Environmental Protection Agency. 1985. *Guidance Manual for Implementing Production-Based Pretreatment Standards and the Combined Wastestream Formula*.

U.S. Environmental Protection Agency. February 1991. *Control of Slug Loadings to POTWs: Guidance Manual*. 21 W-4001.

U.S. Environmental Protection Agency. May 1991. *Supplemental Manual on the Development and Implementation of Local Discharge Limitations Under the Pretreatment Program*.

U.S. Environmental Protection Agency. September 1991. *Guidance for Conducting a Pretreatment Compliance Inspection*. EPA300/R-92-009.

U.S. Environmental Protection Agency. May 1992. *Control Authority Pretreatment Audit Checklist and Instructions*.

U.S. Environmental Protection Agency. June 1992. *Guidance to Protect POTW Workers from Fume Toxic and Reactive Gasses and Vapors*. EPA 812-B-92-001.

U.S. Environmental Protection Agency. 1993. *Guidance Manual for POTW Pretreatment Program Development*. EPA 833/B-83-100.

U.S. Environmental Protection Agency. April 1994. *Industrial User Inspection and Sampling Manual for POTWs*. EPA 831-B-94-001.

U.S. Environmental Protection Agency. June 1994. *Multijurisdictional Pretreatment Programs Guidance Manual*. EPA 833-94-005.

U.S. Environmental Protection Agency. October 1998. *Procuring Analytical Services: Guidance for Industrial Pretreatment Programs*. EPA 833-B-98-004.

U.S. Environmental Protection Agency. February 1999. *Introduction to the National Pretreatment Program*. EPA 833-B-98-002.

U.S. Environmental Protection Agency. September 1999. *Guidance Manual for Control of Wastes Hauled to Publicly Owned Treatment Works.* EPA 833-B-98-003.

10. SEWAGE SLUDGE (BIOSOLIDS)

Contents Page

A. Review of the Sewage Sludge Regulations (Biosolids) 10-1
Land Application Requirements 10-3
Surface Disposal Requirements 10-5
Incineration Requirements 10-6

B. Sludge (Biosolids) Inspection Procedures 10-12
Scope of Inspection Activities 10-12
Inspection Preparation 10-13
Records Review 10-14
Facility Site Review 10-17
Sampling and Laboratory Quality Assurance (QA) 10-18

C. References and Sludge Inspection Checklist 10-36
References 10-36
Sludge Inspection Checklist 10-42

List of Tables

10-1. Records Relevant for Sludge Operations 10-20
10-2. Operating Records for Specific Unit Processes 10-21
10-3. Sludge Sampling Points 10-23
10-4. Recordkeeping Requirements for Class A Pathogen Reduction Alternatives 10-27
10-5. Recordkeeping Requirements for Class B Pathogen Reduction Alternatives 10-29
10-6. Recordkeeping Requirements for Vector Attraction Reduction Sludge Processing Options 10-30
10-7. Sludge Handling Process Evaluation 10-31
10-8. Pollutants Monitored for Land Application, Surface Disposal, and Incineration . . . 10-35

List of Figures

10-1. Sludge Quality Requirements for Land Application Uses 10-8
10-2. Land Applied Sludge Requirements Based on Level of Treatment Achieved 10-9
10-3. Sludge Quality Requirements for Surface Disposal 10-10

Associated Appendices

L. Approved Methods for the Analysis of Sewage Sludge (40 *CFR* Part 503)

Related Websites

Office of Wastewater Management (OWM) Homepage: http://www.epa.gov/owm
Office of Science and Technology (OST) Homepage: http://www.epa.gov/ost

10. A. Review of the Sewage Sludge Regulations (Biosolids)

In addition to materials in this chapter, inspectors must be familiar with Chapter 1 - "Introduction" & Chapter 2 - "Inspection Procedures".

Section 405 of the Clean Water Act (CWA) mandated the development of a Federal sludge management program. On February 19, 1993, Environmental Protection Agency (EPA) promulgated technical standards for the use or disposal of sewage sludge [see 40 *Code of Federal Regulations (CFR)* Part 503, 58 *Federal Regulation (FR)* 9248]. These regulations contain technical standards for three sewage sludge use or disposal practices: land application, surface disposal, and incineration. The National Pollutant Discharge Elimination System (NPDES) regulations had previously been revised in preparation for the issuance of the final technical standards. As NPDES permits are reissued, they include sludge use or disposal requirements. However, the Federal 503 sludge regulations are the minimum requirements that apply to and are enforceable against a facility engaged in a regulated sludge use or disposal practice, regardless of whether that facility's NPDES permit contains sludge use or disposal conditions. Thus, the NPDES permit is not a shield in the case of noncompliance with sludge requirements. This means that as of February 19, 1994, inspectors are expected to identify at a minimum violations of Part 503 requirements. Then if appropriate the enforcement authority can issue a notice of violation or take other appropriate enforcement actions.

The Federal and State sludge management programs currently regulates the use and disposal of sewage sludge, which is the residual generated from the treatment of domestic sewage in a treatment works. Facilities, such as Publicly Owned Treatment Works (POTWs), which are subject to NPDES permit conditions for aqueous discharges to surface waters are now, as generators and preparers of sewage sludge, subject to the 503 regulations. In addition, the sludge program includes other facilities that have not been a part of the NPDES program because they were not point sources of discharge to waters of the United States. Examples of facilities that are now regulated and that may eventually receive permits for the use and disposal of sewage sludge include sewage sludge incinerators, composting facilities, and sewage sludge surface disposal sites. Note, the Part 503 regulation also includes simplified requirements for the land application of domestic septage.

Although the regulations refer to the residual generated from the treatment of domestic sewage as sludge, the term “biosolids” is the current term in general use for those sewage sludges which have been treated and conditioned through biological, chemical, and/or physical processes for the purpose of beneficial reuse as a soil amendment for growing plants and trees.

While EPA was in the process of finalizing more comprehensive regulations to address the use or disposal of sewage sludge, there were existing Federal regulations that applied to the land application and landfilling of sludge. These regulations, issued as interim final criteria in 40 *CFR* Part 257, were promulgated jointly under the authority of the CWA and the Resource Conservation and Recovery Act (RCRA) in 1979. Regulations relating to sewage sludge land disposal practices are promulgated in 40 *CFR* Part 258 for disposal of sewage sludge in Municipal Solid Waste Landfills (MSWLFs) and 40 *CFR* Part 503 for sewage sludge use or

disposal by land application, surface disposal, or incineration replaced them. The application of industrial sludge to the land continues to be regulated by 40 *CFR* Part 257. In addition, the Clean Air Act (CAA) regulations under 40 *CFR* Parts 60 and 61 continue to apply to the operations and air emissions of sewage sludge incinerators. The relevant requirements in 40 *CFR* Part 258 and 40 CFR Parts 60 and 61 are described below.

> 40 *CFR* Part 258—On October 9, 1991, EPA promulgated regulations under Part 258 that established criteria for MSWLFs and standards for the co-disposal of sewage sludge with municipal solid waste. Part 503 requires that sewage sludge be sent to a MSWLF to comply with the appropriate Part 258 requirements. Because the material that is disposed of in MSWLFs is very diverse (e.g., household garbage, commercial solid waste and sewage sludge), the approach to regulating solid waste is different. Instead of regulating pollutants in the solid waste, Part 258 imposes design, operation, and maintenance requirements on the final disposal site. Although pollutant limits are not imposed, sludge to be disposed of must be nonhazardous, as demonstrated by using the Toxicity Characteristic Leaching Procedure (TCLP) and pass a paint filter test to demonstrate the sludge has no free liquids.
>
> 40 *CFR* Part 60, Subpart O —Emission standards for particulates and opacity and operational standards are specified for new source sewage sludge incinerators. New source incinerators are those constructed after June 11, 1973. If mixed municipal waste is being incinerated, then Subpart Ea—Standards of Performance for Municipal Waste Combustors—apply.
>
> 40 *CFR* Part 61, Subparts C & E —Standards were promulgated under authority of the CAA that limit the emission of beryllium and mercury from sewage sludge incinerators. The Part 503 sludge regulations require compliance with the Part 61 beryllium and mercury emission standards.

In general, the Part 503 regulations apply the following types of requirements to the three sewage sludge use or disposal practices:

- Pollutant limits [9 pollutants under land application (40 *CFR* 503.13), 3 pollutants under surface disposal (40 *CFR* 503.23), and 7 pollutants under incineration (40 *CFR* 503.43)]
- Pathogen and vector attraction reduction requirements
- Management practices for siting and operation of sludge use or disposal activities
- Minimum monitoring requirements
- Specific recordkeeping and reporting requirements.

A brief explanation of the requirements that apply to each sewage sludge use or disposal practice is provided below.

Land Application Requirements

Pollutant Limits

The regulations establish four types of limits that regulate 9 pollutants. Figure 10-1 illustrates which limits apply, based on the final sludge use; conversely, Figure 10-2 illustrates which requirements apply, based on the level of treatment achieved.

- Ceiling Concentration Limits — Express these limits as milligram of pollutant per kilogram of sludge on a dry weight basis that can be land applied.

- Cumulative Pollutant Loading Rates (CPLRs) — Express these limits as the total amount of pollutant (kilograms) in sludge that does not meet pollutant concentration limits that can be applied to an area (hectare) of land. When this loading rate is reached, no additional sludge can be applied to the site.

- Pollutant Concentration Limits –- Express these limits as the monthly average concentration of pollutant milligram per kilogram of sludge on a dry weight basis. They apply to sewage sludge sold or given away in a bag or other container and as an alternative limit to CPLRs for bulk sewage sludge.

- Annual Pollutant Loading Rates — Express these limits are the amount of pollutant (kilograms) in a bagged product that does not meet the monthly average pollutant concentration limits that can be applied in a 365-day period on an area (hectare) of land. This loading rate limits the amount of sewage sludge product sold or given away in a bag or other container on a dry weight basis that can be applied each year.

All sewage sludge that is land applied under the requirements of the land application portion of Part 503 must meet the (Table 1) Ceiling Concentration Limits. However, appliers of sewage sludge that meets the “High Quality” (Table 3) Pollutant Concentration Limits do not need to track cumulative loadings of pollutants for this material, while appliers of material that does not meet the “High Quality” Table 3 values but does meet the Table 1 values are required to limit pollutant loadings from sewage sludge application to the (Table 2) Cumulative Pollutant Loading Rates (CPLRs).

Sewage sludge products that are sold or given away by the facility or retailer in bags or other containers must meet the “High Quality” (Table 3) Pollutant Concentration Limits, or meet the (Table 1) Ceiling Concentration Limits and be applied at an annual sewage sludge product application rate that is based on the (Table 4) Annual Pollutant Loading Rate.

Management Practices

The five management practices in 40 *CFR* 503.14 are intended to supplement the pollutant limits and provide additional protection to endangered species and their habitats, surface water, wetlands, groundwater, and human exposure to the sludge. Four are applicable to bulk sludge; one is applicable to bagged or containerized sludge.

Operational Standards: Pathogen and Vector Attraction Reduction Requirements

There are two categories of pathogen reduction requirements: Class A [40 *CFR* 503.15, 503.32(a)] and Class B [40 *CFR* 503.15, 503.32(b)] (with associated public access and site use restrictions on the use of Class B sludge).

- Class A requirements [40 *CFR* 503.32(a)] result in pathogens, at or below the detection limits of the methods (at the time of regulatory development) and sewage sludge that may be used without site restrictions or limiting public access.

- Class B requirements [40 *CFR* 503.32(b)] significantly reduce (but do not eliminate) the pathogens in the sludge and require a waiting period before the land on which the sludge was applied may be used for certain activities.

Sludge that is sold or given away by the facility or retailer in a bag or other container must meet Class A requirements. Apply only Class A bulk sludge to lawns or home gardens. Apply only Class A or Class B bulk sewage sludge elsewhere (i.e., agricultural land, forest, or reclamation sites).

Under Part 503, six alternative approaches are available for achieving Class A sludge. Three alternatives (with specific site restrictions for use of the treated sludge) are provided for achieving Class B sludge.

EPA retained substantially the same pathogen reduction requirements in the Part 503 regulation as were used as the basis of the Part 257 requirements. Therefore, among the alternatives to achieve Class B sludge is treatment using one of the Processes to Significantly Reduce Pathogens (PSRP). Similarly, Class A sludge may be achieved by using one of the Processes to Further Reduce Pathogens (PFRP).

Land applied sludge is subject under the Part 503 regulations to vector attraction reduction requirements to reduce the characteristics of the sludge that attract disease vectors (i.e., insects that are capable of transporting infectious agents, ultimately to humans). Part 503 requires compliance with one of eight vector attraction reduction treatment alternatives if the sludge will be sold or given away in a bag or other container [40 *CFR* 503.33(a)(3)]. Bulk sewage sludge applied to lawns or home gardens must also meet one of eight vector attraction reduction treatment alternatives [40 *CFR* 503.33(a)2)]. Bulk sewage sludge applied elsewhere must meet one of 10 treatment alternatives [40 *CFR* 503.33(a)1)].

Monitoring, Recordkeeping, and Reporting Requirements

As with other NPDES provisions, while the permitting authority may reduce monitoring frequencies based upon consistent demonstrated performance for at least 2 years, Part 503 requires a minimum monitoring frequency (e.g., once per year). (For example, a case might be made for the minimum monthly or quarterly monitoring requirements for a particular parameter by a larger facility to be reduced based upon consistent performance, but not below a minimum of once per year.)

Part 503 recordkeeping requirements differ depending on the type of pollutant limits applied. Recordkeeping requirements, including certification statements specified in Part 503, are imposed on generators/preparers, while other specific recordkeeping requirements are imposed on appliers. The regulations require the facility to retain the specific information for 5 years,

except that some information on applicable cumulative pollutant loading rates must be retained by the facility indefinitely.

While all facilities must maintain records, only a subset must report under the Part 503 regulations. Those facilities that must report at least once per year are listed below.

- Class I sludge management facilities
- POTWs with a design capacity equal to or greater than 1 Million Gallons per Day (MGD)
- POTWs serving a population of 10,000 or more.

Surface Disposal Requirements

Surface Disposal includes monofills (sewage sludge-only landfills), dedicated disposal surface application sites, (e.g., where sewage sludge pollutants may be applied under controlled conditions at higher than the agronomic rate for disposal purposes even though there may also be beneficial use aspects), as well as piles or mounds, and impoundments or lagoons where the sewage sludge remains on the land beyond 2 years unless it can be affirmatively documented that such operations are “treatment” or “temporary storage” rather than permanent disposal sites.

Pollutant Limits

The 40 *CFR* 503.23 regulates three pollutants. Limits apply to sewage sludge that is placed on or in a surface disposal site that does not have a liner and leachate collection system. There are no pollutant limits on sewage sludge placed in sewage sludge units equipped with a liner and leachate collection system. The distance between the active sewage sludge unit and the site property line/boundary determine the specific pollutant limits that apply; the closer the distance to the boundary, the more stringent the limits (see Figure 10-3). An owner/operator can request site-specific pollutant limits; the permitting authority established these limits through a permit.

Management Practices

The 40 *CFR* 503.24 established a total of 14 management practice requirements. Many are one-time surface disposal site location restrictions. Others address operational activities (e.g., leachate and runoff collection systems, methane gas monitoring) and post-closure activities.

Operational Standards

Under the Surface Disposal requirements (40 *CFR* 503.25), sewage sludge must meet one of the Class A or Class B pathogen reduction alternatives unless the sewage sludge is covered with soil or other material daily. The inspector should note, however, that the Class B site restrictions only apply to land applied sewage sludge. Surface disposed sludge must also meet one of eleven vector attraction reduction alternatives.

Monitoring, Recordkeeping, and Reporting Requirements

Regulations require monitoring and recordkeeping requirements (40 *CFR* 503.26 to 503.28), including certification statements, for the sludge generator or final preparer and/or the owner/ operator of the surface disposal site. Regulation require minimum monitoring frequencies based on the volume of sludge disposed. The facility must maintain all records for 5 years. The same classes of facilities identified under the land application section must report at least once per year.

Incineration Requirements

Pollutant Limits

The regulations cover a total of seven pollutants in sewage sludge that is incinerated. Limits for five metals are calculated by the permitting authority based on site-specific factors using the equations specified in 40 *CFR* 503.43. Limits for the other two pollutants (mercury and beryllium) are derived from air emission standards promulgated under 40 *CFR* Part 61. These limits appear in the permit issued to the owner/operator of the sewage sludge incinerator.

Operational Standards

The 40 *CFR* 503 establishes an average monthly standard on the total hydrocarbons or carbon monoxide concentration in the exit gases of an incinerator to protect from excessive emissions of organic pollutants.

Management Practices

The seven management practices in 40 *CFR* 503.45 ensure that certain instruments are correctly installed, calibrated, operated, and maintained; that incinerator maximum combustion temperature and air pollution control equipment operating standards are established; and that endangered species and their habitats are protected. The specific management practice requirements should be established by the permitting authority based on site-specific factors and should appear in the incinerator's permit.

Monitoring, Recordkeeping and Reporting Requirements

The 40 *CFR* 503.47 and 503.48(a), imposes monitoring requirements for sewage sludge to be incinerated on the owner/operator of the incinerator. The 40 *CFR* 503.46 to 503.48 requires monitoring (a) of sewage sludge for pollutant (i.e., seven metals) concentrations; (b) of incinerator stack exit gases for total hydrocarbon or, alternatively, carbon monoxide (CO), oxygen concentrations, and moisture content; and (c) of incinerator combustion temperatures and air pollution control equipment operating parameters. Monitoring requirements to demonstrate compliance with Part 61 beryllium and mercury standards are also likely to be imposed on owners/operators of sewage sludge incinerators (40 *CFR* 503.47(d)(e).

Records required to be maintained by owners/operators of incinerators are specified both in 40 *CFR* 503.47 and site-specific conditions in the NPDES or sludge permit.

As specified in 40 *CFR* 503.48, the same classes of facilities identified under the land application section are required to report at least once per year. Reporting requirements are imposed on owners and operators of sewage sludge incinerators.

Figure 10-1

Sludge Quality Requirements for Land Application Uses

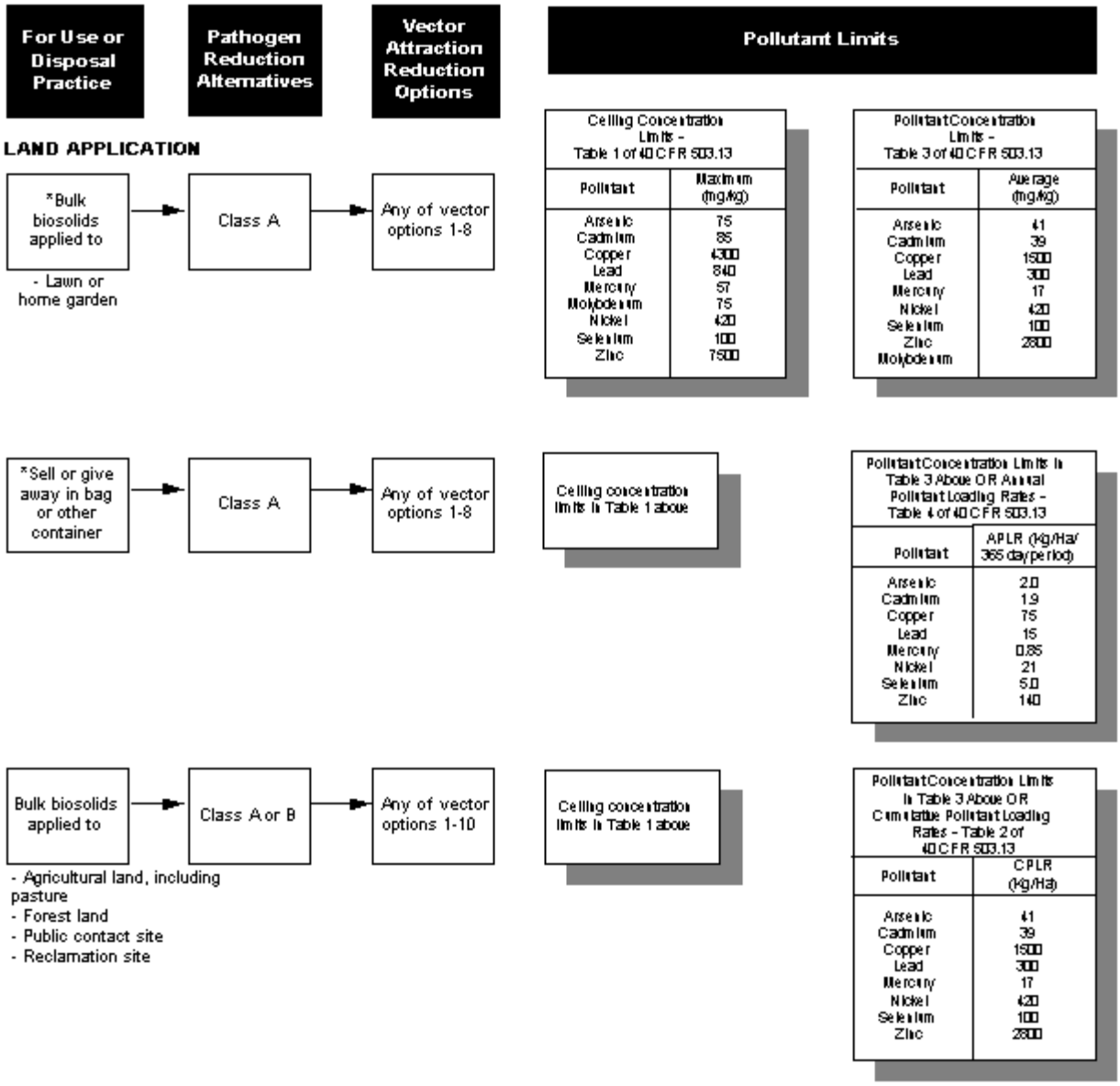

*Exceptional Quality (EQ) material. General requirements, management practices, site controls, and harvesting restrictions do not apply.

Figure 10-2

Land Applied Sludge
Requirements Based on Level of Treatment Achieved

SLUDGE TYPE	RESULTING REQUIREMENTS
Exceptional Quality (EQ)	
1) Meets all pollutant concentration limits (Table 2-1, p. 29) 2) Meets any of the Class A alternatives (Table 2-5, p. 37) 3) Meets any of V.A.R. Options 1-8 (Table 2-6, p. 37)	Unregulated for Use Monitoring, Recordkeeping, and Reporting Requirements
Pollutant Concentration (PC)	
1) Meets all pollutant concentration limits (Table 2-1, p. 29) 2) Meets any of the Class B alternatives (Table 2-5, p. 37) 3) Meets any of V.A.R. Options 1-10 (Table 2-6, p. 37)	Site Restrictions (Fig. 2-4, p. 38) Management Practices (Fig. 2-9, p. 45) General Requirements (Fig. 2-8, p. 44) Monitoring, Recordkeeping, and Reporting Requirements
OR	
1) Meets all pollutant concentration limits (Table 2-1, p. 29) 2) Meets any of the Class A alternatives (Table 2-5, p. 37) 3) Meets V.A.R. Option 9 or 10 (Table 2-6, p. 37)	Management Practices (Fig. 2-9, p. 45) General Requirements (Fig. 2-8, p. 44) Monitoring, Recordkeeping, and Reporting Requirements
Cumulative Pollutant Loading Rate (CPLR)	
1) Meets ceiling concentration limits (Table 2-1, p. 29) 2) Meets any Class A or Class B alternative (Table 2-5, p. 37) 3) Meets any of V.A.R. Options 1-10 (Table 2-6, p. 37)	Site Restrictions (Fig. 2-4, p. 38) Management Practices (Fig. 2-9, p. 45) General Requirements (Fig. 2-8, p. 44) Monitoring, Recordkeeping, and Reporting Requirements CPLR Loading Rate Limits (Table 2-1, p. 29)
Annual Pollutant Loading Rate (APLR) **(For solids sold or given away)**	
1) Meets ceiling concentration limits (Table 2-1, p. 29) 2) Meets any of the Class A alternatives (Table 2-5, p. 37) 3) Meets any of V.A.R. Options 1-8 (Table 2-6, p. 37)	Site Restrictions (Fig. 2-4, p. 38) Management Practices (Fig. 2-9, p. 45) General Requirements (Fig. 2-8, p. 44) Monitoring, Recordkeeping, and Reporting Requirements APLR Loading Rate Limits (Table 2-1, p. 29)

NOTE: Tables and page numbers referenced above are from EPA's
A Plain English Guide to the EPA Part 503 Biosolids Rule , September 1994.

Figure 10-3

Sludge Quality Requirements for Surface Disposal

SURFACE DISPOSAL

Unlined sewage sludge unit → Class A or B or daily cover → Any of vector options 1-11 →

Unit Boundary to Property Line Distance in Meters	Pollutant Concentrations*		
	Arsenic (mg/kg)	Chromium (mg/kg)	Nickel (mg/kg)
0 to < 25	30	200	210
25 to < 50	34	220	240
50 to < 75	39	260	270
75 to < 100	46	300	320
100 to < 125	53	360	390
125 to < 150	62	450	420
150 and greater	73	600	420

Sewage sludge unit with liner/ leachate collection → Class A or B or daily cover → Any of vector options 1-11 → No pollutant limits

** Site-specific limits may be approved by the permitting authority, if requested.*

This page intentionally left blank.

10. B. Sludge (Biosolids) Inspection Procedures

Scope of Inspection Activities

Inspectors should verify compliance with the following general activities:

- Sludge monitoring, recordkeeping, and reporting
- Sludge treatment operations
- Sludge sampling and laboratory Quality Assurance (QA).

EPA intends for the evaluation of sludge management activities to be incorporated into the existing inspection structure so that inspection resources can be used most efficiently. The inspector can identify and investigate problems that might contribute to noncompliance with sludge requirements during any inspection site visit. The Pretreatment Compliance Inspection (PCI), the Compliance Evaluation Inspection (CEI), and the Performance Audit Inspection (PAI) are the most likely vehicles for evaluating compliance with sludge requirements. Examples of how the NPDES inspector may use existing NPDES inspections when evaluating sludge requirements are presented below.

- CSI—The Compliance Sampling Inspection (CSI) is used if the inspector decides that sludge sampling is necessary to determine compliance with applicable requirements.

- CEI—The inspector has historically looked at sludge treatment as part of the Compliance Evaluation Inspection (CEI) because of its effect on wastewater treatment. This evaluation of sludge treatment should be expanded to include a review of sludge monitoring, reporting, and record-keeping, and a more comprehensive evaluation of the Operation and Maintenance (O&M) of sludge treatment processes, to evaluate compliance with sludge permit requirements.

- PAI—The Performance Audit Inspection (PAI) may evaluate compliance with sludge monitoring requirements, and evaluate the permittee's sludge sampling and analytical procedures.

While NPDES inspectors are not required to conduct an in-depth compliance assessment of sludge final use and disposal practices when such practices occur away from the treatment plant, it can help ascertain the vector reduction compliance status at these sites rather than at the Wastewater Treatment Plant (WWTP). In situations where final use and disposal requirements have been established in the facility's NPDES permit (e.g., management practices such as 10-meter buffer zones between the sludge application site and surface waters) and the activity is offsite, the inspector should verify compliance with those requirements through a records review at the facility. As part of a sampling inspection, the inspector may need to sample the sludge to determine compliance with pollutant limits.

EPA intends to focus sludge inspection activities on those aspects of sludge management that the inspector can easily evaluate during an existing NPDES compliance or pretreatment inspection. Inspectors will rely on an evaluation of sludge treatment operations, the observation

of onsite sludge storage and disposal activities, and the review of sludge monitoring and disposal records to identify actual and potential noncompliance with sludge requirements. Inspectors should document compliance or noncompliance with sludge final use or disposal requirements in accordance with standard NPDES compliance inspection procedures. An inspection checklist is useful for documenting that all necessary information has been collected. Inspection checklists are included at the end of this chapter. These checklists are based on the checklists in EPA's *Guidance for NPDES Compliance Inspector: Evaluation of Sludge Treatment Processes* (EPA November 1991) and *Guidance for NPDES Compliance Inspector: Verifying Compliance with Sludge Requirements* (EPA November 1991), as modified by EPA Region 8. The checklists should be used in conjunction with the checklist questions found in the 1991 guidance manuals. However, sludge permits may contain additional sludge permit conditions, based on case-by-case considerations, that are not included on the checklist. The inspector should identify additional permit requirements and verify compliance with these conditions as well. To accomplish this, it is recommended that the inspector expand the checklist, if necessary, to ensure that it is specific to the NPDES permit and the sludge final use or disposal activity. The inspector should complete the checklist and should incorporate his/her findings and conclusions in the final inspection report prepared for the facility.

The NPDES compliance inspector should consult EPA's 1991 *Guidance for NPDES Compliance Inspector: Evaluation of Sludge Treatment Processes* when preparing to conduct a sludge inspection. This technical reference presents a detailed examination of sludge unit processes and also contains extensive technical checklists that summarize the most critical elements of sludge thickening, stabilization, conditioning, dewatering, and disinfection. A technical understanding of the proper design and operation of the sludge treatment processes is essential for conducting thorough and informed sludge inspections.

Inspection Preparation

On preparing for the inspection, the inspector should:

- Review the NPDES Permit (or the facility's sludge permit, if applicable). When reviewing the NPDES permit file in preparation for the inspection, identify:
  - Permit conditions applicable to sludge including treatment; general requirements; management practices; and monitoring, reporting, and recordkeeping requirements
  - Any additional requirements in the NPDES permit that may reflect State regulations. Additionally, the NPDES permit may incorporate a separate State permit by reference, in which case the State permit is also enforceable under the Federal CWA.
- Review sludge self-monitoring data
- Become familiar with the sludge disposal practices used
- Review appropriate Federal regulations (i.e., 40 *CFR* Part 503 Regulations, or Part 258 if sludge is disposed of in a municipal solid waste landfill, and any other applicable State or local regulations)

- Review relevant guidance for background information and implementation procedures (e.g., guidelines on calculating agronomic rate, EPA's Process Design Manuals for Land Application of Municipal Sewage Sludge and Municipal Sludge Landfills, Control of Pathogens and Vector Attraction in Sewage Sludge)

- Verify that records kept by the permittee help in evaluation of compliance with sludge requirements.

Records Review

The Part 503 sludge regulations contain recordkeeping and reporting requirements. The facility's NPDES or sludge permit may have additional recordkeeping or reporting requirements. The inspector should conduct an evaluation of the sludge records and reports found at the facility to determine compliance with these recordkeeping and reporting requirements. The inspector should use the procedures listed below for these routine inspections. If suspected violations are uncovered during the routine evaluation, a more intensive investigation should be conducted.

The inspector should check in the records review process, the evaluation of compliance with sludge recordkeeping requirements on the following:

- Does the facility have all required information available for review?

- Does the facility address all regulated pollutants and sludge use and disposal practices?

- Does the facility have all the current sludge information?

- Does the facility maintain sludge records for at least 5 years (commencing July 20, 1993)?

- Does the facility’s information contained in the sludge records support the data submitted to the permitting authority?

- Does the facility’s records indicate areas needing further investigation?

The inspector should also identify whether violations of sludge-related permit requirements (e.g., concentration limits and/or management practices) have been reported to the control authority, as required by the permit. Finally, the inspector should verify that the permittee has notified EPA of any changes to sludge use or disposal practices.

Evaluation Procedures

The inspector should first review the permit and fact sheet and list all sludge recordkeeping requirements. Table 10-1 is a list of records that may be relevant for sludge. This list is supplemented by Table 10-2, which describes records relevant to the operation of specific sludge treatment unit processes. Throughout the inspection, compare the facility's operations with the permit conditions to verify that required permit activities for sludge are correct, current, and complete.

An evaluation of sludge self-monitoring records and/or procedures involves the same elements as an evaluation of their wastewater monitoring data; however, there are some special considerations inherent in sludge sampling. In evaluating the permittee's records, inspectors should look for documentation regarding:

- Regulated Pollutants—As identified in the NPDES permit or applicable Federal or State regulations.

- Monitoring Frequency—As identified in the NPDES permit or applicable Federal or State regulations. The inspector should note that Part 503 establishes minimum monitoring frequencies based on the quantity of sewage sludge used or disposed of.

- Sample Location—The appropriate sampling point is the last treatment process the sludge goes through before leaving the treatment plant for use or disposal. For example, if digested sludge is land applied, the sludge should be sampled as it is transferred from the digester to the truck prior to being hauled offsite. Table 10-3 identifies sludge sampling points appropriate for the various types of treated sludge.

- Sample Types—Grabs or composites may be appropriate depending on the situation, but it is important to note that a grab sample from a lagoon, drying bed, compost pile, or truck must consist of numerous samples collected from various places in the lagoon, bed, pile, or truck and must be combined to make a representative sample.

- Sample Volume—If evaluating the sample collection process or taking samples, the inspector must ensure that the container is not filled completely. Some space should be left to allow for expansion of the sample due to gas production. Rapid cooling of the sample will also reduce gas production. (Refer to Appendix L for specific sample volumes.)

- Sample Containers—Sample containers are generally the same types as those used for collection of wastewater samples, except that sludge sampling containers should be wide mouth bottles. (Refer to Appendix L for a description of the appropriate container material.)

- EPA Sample Identification Methods—Same as for wastewater sampling.

- Preservation and Holding Times—The primary difference in sludge preservation is that samples should not be chemically preserved in the field because the sludge matrix makes it difficult to thoroughly mix the preservative into the sample. However, samples should be iced. (Refer to Appendix L.)

- Chain-of-custody—Same as for wastewater sampling.

- Quality Control—Same as for wastewater sampling.

- Analytical procedures used by lab—The analytical methods used for sludge are different from those used for wastewater. Approved analytical methods are listed in Part 503 (40 *CFR* 503.8). For example, Part 503 requires that analyses for inorganic pollutants use the procedures in *Test Methods for Evaluating Solid Waste, Physical/Chemical Methods*, EPA publication SW-846. The inspector should note the information recorded regarding sample handling and analysis at the laboratory and verify that it is correct. If

evaluating the laboratory, the procedures are the same as those followed in a PAI. The inspector should look at:

- Analytical procedures
- Laboratory services
- Instruments and equipment
  - Calibration
  - Maintenance
- Supplies
- Quality Assurance/Quality Control (QA/QC)
  - Precision and accuracy of measurement process
  - Data handling and reporting
  - Records retention
  - Personnel qualifications.

- Analytical Results—Verify that results documented in the files are consistent with those reported.

The inspector should verify that reporting requirements are fulfilled according to the permit and applicable regulations. The NPDES permit may or may not have specific reporting requirements; however, the Part 503 sludge standards have specific reporting requirements that apply regardless of whether they appear in the NPDES permit. The May 1989 revisions to the NPDES regulations established required permit conditions regarding notification of change and at least annual reporting of sludge monitoring results. As NPDES permits are reissued, they will contain, at a minimum, these standard conditions as well as conditions specified in Part 503. Based on the applicable requirements, the inspector should verify that:

- Reports contain all required information
- Reports are submitted at the required frequency
- Data are reported in Discharge Monitoring Report (DMR) or other approved form.

Inspectors should review unit operation records to verify compliance with pathogen and vector attraction reduction requirements. Tables 10-4, 10-5, and 10-6 list the records and operating requirements for the Part 503 Class A pathogen reduction alternatives, the Class B pathogen reduction alternatives, and the vector attraction reduction options, respectively. Inspectors are not expected to review each monitoring record, but rather to verify that records are being maintained and are available for review. If a permittee has problems meeting either its pathogen or vector attraction reduction requirements (e.g., fecal coliform or percent volatile solids reduction), the inspector should review treatment operating records to identify potential noncompliance with the particular operating requirements specified in Part 503 for the particular pathogen and vector reduction process employed by the permittee. For example, an inspector might check a treatment facility's pH or temperature records to determine whether the sludge has been maintained at the appropriate pH or temperature for the required duration during treatment.

The inspector should verify that records are available for all disposal practices:

- Volume of sludge disposed of
- Sludge quality data
- Specific records appropriate for demonstrating compliance with the general requirements, management practices, and operational standards.

The inspector should verify whether records are maintained in accordance with permit requirements. The May 1989 NPDES regulatory revisions created a mandatory permit condition requiring that sludge records be kept for 5 years. The Part 503 regulations establish specific recordkeeping requirements for each party involved in the sewage sludge use or disposal process.

Facility Site Review

Inspection of Solids Handling Unit Processes

Sludge processing arguably poses the greatest challenges in wastewater treatment from the standpoints of design, operation, and maintenance.

When conducting the walk-through visual inspection of the facility, the inspector should be aware of, and look for, physical conditions that are indicative of potential or existing problems. Some of the more common indicators of potential problems are listed in Table 10-7. The presence of these conditions may warrant a more in-depth inspection of the sludge treatment processes. A checklist is provided at the end of this chapter to assist the inspector during the facility site review. The questions on this checklist are sludge-specific and should be asked in conjunction with the Facility Site Review checklist. In addition, many of the questions in the NPDES checklist relate to the overall operation of the facility and therefore, can also be applied to sludge evaluations (e.g., treatment units properly operated and maintained). The inspector should look for conditions that indicate potential or existing problems. If the inspector finds conditions that are a potential problem, this may trigger a more detailed evaluation. EPA has developed guidance and checklists for conducting in-depth evaluations of each of the most common sludge treatment unit processes, *Guidance for NPDES Compliance Inspectors*: *Evaluating Sludge Treatment Processes*, November 1991.

The inspector should determine whether the facility is operating its sludge treatment and disposal processes in a manner consistent with the requirements established in its NPDES permit. If the inspector discovers conditions at the facility that threaten public health or the environment (e.g., contaminating groundwater or surface water, exposing the public to pathogens or disease vectors, or compromising public safety), the inspector should inform the enforcement staff so that appropriate action can be taken. If knowing endangerment is discovered, the criminal investigations unit should be informed.

Many large-scale operations are conducted outside, such as sludge drying, composting, temporary and long-term storage, and loading and hauling. Inspectors should note these outside operations' exposure to rainfall and runoff collection and treatment methods. If storm water collection devices have been constructed, the inspector should evaluate the performance and maintenance of these devices as well as their design capacity (e.g., the 10-year 24-hour storm event or the 25-year 24-hour storm event). Visual observations can detect obvious problems that may contribute to the contamination of surface water or groundwater such as erosion, breaches of dikes or berms, or cracks in the concrete or asphalt. The inspector should inquire as to whether the capacity of the collection devices has ever been exceeded during any storm event.

The sludge loading area should be inspected to determine how the sludge is being hauled or transported. The inspector should note the size of the truckloads and the number of truckloads

hauled over a 1-day period (or another time period). These figures are useful to the inspector in verifying the permittee's records and reports on the volume of sludge generated and disposed of.

Sludge Storage

The inspector should also verify that the permittee has adequate storage capacity for its sludge in the event that its preferred disposal method is interrupted for any reason (e.g., noncompliance with cumulative loading rates on the land application site). There are no Federal requirements specifying a minimal storage capacity; the appropriate capacity will vary depending on the amount of sludge generated and the facility's use or disposal option(s). Storage capacity should address normal, routine storage prior to disposal and should anticipate emergency conditions, such as:

- Equipment malfunction
- Inclement weather
- Unanticipated loss of disposal site
  - Farmer decides to discontinue use of sewage sludge
  - Landfill violates requirements and may no longer accept sludge or is required to close.

Some States have developed storage capacity requirements. If the permittee cannot dispose of its sludge in the preferred manner, it should have either adequate storage capacity for its sludge or clearly established plans for alternative methods of disposal.

Sampling and Laboratory Quality Assurance (QA)

The sludge inspection should evaluate the nature, scope, and adequacy of sludge sampling and analysis conducted by the permittee. The most likely, existing inspection vehicle for conducting this evaluation is the PAI, since it involves a detailed assessment of the permittee's self-monitoring activities, including sample collection and laboratory analysis. The findings of the sampling and laboratory QA review should be summarized and included in the final inspection report for the facility.

Sampling Procedures and Techniques

The inspector's evaluation of the permittee's sludge sampling procedures will address similar criteria as those evaluated in the context of wastewater sampling. The sampling procedure elements that should be evaluated during the inspection include:

- Sample collection techniques
  - Selection of representative sampling sites
  - Sample types
  - Sample volume
  - Sample containers
- EPA sample identification methods
- Sample preservation and holding time
- Chain-of-custody and shipment of samples
- Quality Control (QC)
  - Duplicates
  - Blanks
- Data handling and reporting.

A detailed discussion on evaluating these elements can be found in Chapter Five. While many of these elements are evaluated using the same criteria, regardless of the media being sampled, sludge sample collection techniques and sample preservation are different. The inspector should review EPA's sewage sludge sampling video and refer to EPA's 1989 *POTW Sludge Sampling and Analysis Guidance Manual* for detailed information regarding sludge sampling procedures. Table 10-3 of this document summarizes appropriate sample locations. Appendix L lists sample containers, preservation techniques, and holding times as a quick reference for the inspector. In addition to these references, a few special sludge sampling considerations are described below.

- Equipment. The equipment used to collect sludge samples is different from that used to collect wastewater samples. The automatic composite samplers used to collect wastewater cannot be used to collect sludge samples because the high solids content of the sludge fouls the tubing. The type of equipment used to collect samples of soil or other solid waste material is more appropriate for the collection of sludge samples. Stainless steel buckets, trowels, and augers are typically used to collect solid sludge cake. Graduated glass or plastic pitchers or cylinders, or plastic or stainless steel buckets are used to collect liquid sludge samples.

- Sample Location. If the permit does not identify a specific sludge sampling location, the inspector must select one. (See EPA's sewage sludge sampling video for an overview of this process.) EPA's 1989 *POTW Sludge Sampling and Analysis Guidance Manual* states that for purposes of enforcement, sludge samples must come from the treatment unit process immediately prior to sludge disposal or end use. Often, the last unit process is one of the dewatering processes described in the accompanying technical guidance. Table 10-3, from EPA's 1989 Sampling and Analysis Guidance Manual, suggests appropriate sampling points for a variety of unit processes.

Table 10-1

Records Relevant for Sludge Operations

Sludge Use/Disposal Records

- Volume
- Type of use and/or disposal options used
- Use/disposal sites
- Loading rates of pollutants (e.g., agronomic) at each land application site

Sludge Operating Records
- Daily operating log
- Equipment maintenance scheduled and completed
- Detention time, operating temperature, or pH to evaluate pathogen reduction

Sludge Monitoring Records
- Constituents/pollutants in sludge
- Mass of sludge generated and disposed of (in dry metric tons per year)

Sludge Sampling and Analytical Data
- Dates, times, and locations of sampling
- Sampling protocols and analytical methods
- Results of analyses
- Dates and times of analyses
- Name(s) of analysis and sampling personnel

Sludge Laboratory Records
- Calibration and maintenance of equipment
- Laboratory bench sheets or logs and calculations
- Quality Assurance/Quality Control (QA/QC) records

Table 10-2

Operating Records for Specific Unit Processes

THICKENING PROCESSES		
Gravity Thickening	Dissolved Air Flotation	Centrifuge
• Overflow volume/rate • Influent flow • Percent solids - Sludge feed - Thickened sludge - Overflow • Sludge blanket depth	• Sludge feed rate • Recycle flow • Daily operating time • Percent solids - Sludge feed - Thickened sludge - Subnatant • Floating sludge depth • Air flow rate • Retention tank pressure • Percent solids capture • Detention time • Air to solid ratio	• Influent sludge flows • Volume cake produced • Percent solids - Sludge feed - Centrate - Sludge cake • Daily operating time
STABILIZATION PROCESSES (Pathogen and/or Vector Attraction Reduction)		
Aerobic Digestion	Anaerobic Digestion	Incineration
• Air supply • Solids retention time • Temperature • DO level • pH • Feed sludge - TS, TVS, and pH - Flow rate • Digested sludge - SOUR - TS, TVS, and pH - Flow rate • Supernatant - Flow rate and BOD - TSS and ph	• Detention time • Temperature • pH and alkalinity • Gas production and quality • Volatile acids • Feed sludge - TS, TVS, and pH - Flow rate • Digested sludge - TS, TVS, and pH - Flow rate • Supernatant - Flow rate and BOD - TSS and pH • Cleaning frequency	• Operating schedule • Sludge feed - Solids content - Feed rate - Volatile solids • Combustion temperature • Sludge residence time • Fuel flow • Off-gas oxygen content • Air feed rate • Emission control equipment - Pressure drop • Type of fuel • Volume of ash produced • Stack gas monitoring
Heat Temperature	Composting	Chemical Conditioning/Stabilization
• Temperature/time • Pressure • Detention time • Feed sludge - TS and TVS - Flow rate - Percent solids • End product volatile solids	• Oxygen concentration • Temperature and time • Turning frequency • Percent sludge solids • Type and amount of bulking agent(s) • Header pressure	• Chemical types and dosage • Mixing • pH • Temperature
Electron Irradiation	Gamma Irradiation	
• Sludge feed rate • Electron dosage • Temperature	• Sludge feed rate • Gamma ray source strength	

Table 10-2

Operating Records for Specific Unit Processes (Continued)

DEWATERING PROCESS		
Vacuum Filter	**Pressure Filter**	**Belt Filter Press**
• Sludge feed - Total solids • Sludge cake - Total solids • Filtrate - Flow - BOD - TSS • Maintenance • Spare parts	• Sludge feed percent solids • Sludge cake percent solids • Volume of sludge processed • Cycle length • Volume conditioning chemicals • Filtrate - Flow - BOD - TSS	• Loading rate • Operating speed • Feed slurry - Total solids and flow • Dewatered sludge - Total solids - Flow • Filtrate and wash water - BOD and SS - TSS and flow • Preventive maintenance • Polymer
Drying Bed	**Drying Lagoons**	**Heat Drying**
• Sludge loading rate • Quantity in bed • Depth of sludge in bed • Date deposited • Detention time • Ambient temperature • Drying bed construction (i.e., lined) • Undertrain destination • Percent solids of the sludge feed and of the dewatered sludge	• Sludge loading rate • Percent solids - Sludge - Decant • Quantity in lagoon • Depth in lagoon • Date deposited • Drying time • Rainfall	• Operating schedule - Start-up - Shut down • Sludge feed rate • Percent solids - Sludge feed - Dried/Pelletized product • Fuel consumption • Air flow • Drying temperature • Detention time • Stack gas monitoring - Oxygen - Particulates - Carbon monoixde - Carbon dioxide
LEGEND: DO = Dissolved Oxygen TS = Total Solids TVS = Total Volatile Solids BOD = Biochemical Oxygen Demand TSS = Total Suspended Solids SS = Suspended Solids SOUR = Specific Oxygen Uptake Rate		

Table 10-3

Sludge Sampling Points

Sludge Type	Sampling Point

Anaerobically digested	Sample from taps on the discharge side of positive displacement pumps.
Aerobically digested	Sample from taps on the discharge lines from pumps. If batch digester is used, sample directly from the digester. Two cautionary notes regarding this practice: • If aerated during sampling, air entrains in the sample. Volatile organic compounds may purge with escaping air. • When aeration is shut off, solids separate rapidly in well-digested sludge.
Thickened	Sample from taps on the discharge side of positive displacement pumps.
Heat treated	Sample from taps on the discharge side of positive displacement pumps after decanting. Be careful when sampling heat treatment sludge because of: • High tendency for solids separation • High temperature of samples (frequently >60°C) can cause problems with certain sample containers due to cooling and subsequent contraction of entrained gases.
Dewatered by belt filter press, plate and frame press, centrifuge, or vacuum filter press	Sample from sludge cake discharge chute and conveyor. Alternatively, sample from collection container or storage bin for the dewatered sludge; sample from many locations within the storage bin and at various depths, collect equal samples from each point, and combine them to form one sample of the total storage bin.
Dewatered or air dried in drying beds, or bin or truck bed	Divide bed into four quadrants, collect equal sample volume from the center of each quadrant, and combine them to form one sample of the total bed. Each grab sample should include the entire depth of the sludge (down to the sand).
Composted	Collect full core samples from randomly selected sites in the pile. Sample directly from front-end loader or other conveyance device as the sludge is being loaded into trucks to be hauled away.

- Sample Collection Techniques. Obtaining a representative sample of sludge is difficult when the sludge is not flowing through a pipe or along a conveyer. To obtain a representative sample of sludge from a sludge bed or lagoon, a compost pile, or a truck, several samples have to be taken from various places in the pile and "combined" to make a representative sample.

- Sample Preservation. Samples of solid sludge are not usually preserved in the field because it is difficult to thoroughly mix the preservative throughout the sludge sample. It is best to preserve sludge samples that are high in solids at the laboratory. The appropriate field preservative outlined in Appendix L is to chill the sample to 4°C. Note, some exemptions do exist such as a sample for the Specific Oxygen Uptake Rate (SOUR) should be kept at the same temperature as the aerobic digestor and analyzed within 30 minutes of sample.

Laboratory Analysis and Quality Assurance

During a PAI, the inspector is already conducting an in-depth evaluation of the permittee's laboratory analytical techniques and QA/QC procedures. The following elements are evaluated during this inspection:

- Permittee sample handling procedures in the laboratory
- Laboratory analysis techniques
  - Permittee laboratory analytical procedures (Analytical methods specified by 40 *CFR* Part 503 or other methods established in the permit)
  - Laboratory services
  - Instruments and equipment
  - Supplies
- QA/QC
  - Precision and accuracy of the measurement process
  - Data handling and reporting
  - Sludge records retention (for 5 years)
  - Personnel qualifications.

Again, many of these elements are evaluated according to the same criteria regardless of the sample being analyzed. The inspector is referred to Chapter Seven and the 1990 *NPDES Compliance Monitoring Inspector Training Module on Laboratory Analysis* for general guidance on inspecting the permittee's laboratory procedures. There are some differences in sample preparation and analytical techniques for sludge with which the inspector should be familiar.

In conducting the sludge component of the PAI, the inspector should closely evaluate the permittee's sample preparation procedures. The sludge matrix is more complex and variable than the wastewater matrix; therefore, the laboratory's development of sample preparation techniques is of particular concern.

The NPDES permit may require the permittee to analyze sludge for conventionals, inorganic pollutants, metals, and pathogens (depending on the ultimate sludge disposal practice). For example, sludge that is going to be land applied will be analyzed for 9 metals and nitrogen to determine the appropriate application rate. Table 10-8 lists the constituents required to be monitored by Part 503. 40 *CFR* 503.8 contains a listing of approved analytical methods and

volatile solids reduction calculations that must be used for monitoring sludge quality. The analytical methods for metals are not the same as those used for the analysis of wastewater.

Appendix L contains the required analytical method, the maximum allowable sample holding times, sample preservation techniques, sample containers, sample preparation methods, and additional comments that may be pertinent to the analytical method.

The inspector should keep the following points in mind when reviewing the permittee's lab and analytical results:

- The Part 503 standards are expressed on a dry weight basis. Laboratory results for sludge are typically reported in one of two forms, wet weight (i.e., mg/L) or dry weight (i.e., mg/kg). Watch out for mg/Kg units that are wet weight rather than dry weight. The laboratory should be providing the results on a dry weight basis. In the event that the laboratory results are reported on a wet weight basis (i.e., in mg/L), the results for each pollutant in each sample must be recalculated to determine the dry weight concentration. To accomplish this conversion, the percent total solids in the sludge sample must be known. Thus, the lab must analyze the sample for percent solids using Method 2540G of *Standard Methods*, 18th Edition.

  The following equation can be used to determine the dry weight concentration because the equation uses the assumption that the specific gravity of water and sewage sludge are both equal to one. However, this assumption holds true only when the solids concentration in the sludge is low. The calculated dry weight concentration may vary slightly from the actual concentration as the solids content increases because the density of the sewage sludge may no longer be equal to that of water. This concern does not arise when the solids content of sludge is usually low. EPA is aware of this potential problem and may make a determination regarding this matter at a later date.

  Determine the pollutant concentration on a dry weight basis using the following abbreviated conversion:[1]

$$\text{PC (dry, mg/kg)} = \frac{\text{PC (wet, mg/L)}}{\text{(\% total solids)}}$$

  where PC = Pollutant concentration

  A unit conversion is incorporated into the equation.

- For metals, a common analytical error is that labs conduct the metals analyses using analytical methods developed for water and wastewater. Analytical methods for water and wastewater are found in *Standard Methods,* while the solid waste analytical methods are found in *Test Methods for Evaluating Solid Wastes* (EPA SW-846). For sludge samples, all metals must be analyzed by SW-846 methods. If you find non-

[1] *Analytical Methods Used in the National Sewage Sludge Survey.* August 1988. U.S. EPA Office of Water Regulations and Standards (WH-552), Industrial Technology Division, Washington, DC.

detects for the metal concentrations, in general the laboratory is not following the method requirement of digesting equivalent to 1gm dry weight of solid.

- Also for metals, note that more than one SW-846 method is provided for each pollutant. The difference between the methods is usually the equipment used [i.e., direct aspiration, furnace, or Inductively Coupled Plasma (ICP) scan] and the level of detection desired. Each of the three methods is EPA-approved, but certain sample characteristics may require one to be used instead of another.
- SW-846 Method 3050 or equivalent, is the required preparation method for all metals except mercury (using equivalent to 1 gram dry weight).

- In contrast to the metals, many of the additional inorganic parameters [e.g., nitrite, Total Kjeldahl Nitrogen (TKN), etc.] require methods that are found in *Standard Methods for the Examination of Water and Wastewater*. There are several reasons for this, one being that there is no method for the parameter that is specific to solid waste.

Table 10-4

Recordkeeping Requirements for Class A Pathogen Reduction Alternatives

Alternative A1—Time and Temperature
• Analytical results for density of *Salmonella sp.* bacteria or fecal coliform (most probable number) • Sludge temperature • Time (days, hours, minutes) temperature maintained
Alternative A2—Alkaline Treatment
• Analytical results for density of *Salmonella sp.* bacteria or fecal coliform (most probable number) • Sludge pH • Time (hours) pH maintained above 12 (at least 72 hours) • Sludge temperature • Percent solids in sludge after drying (at least 50 percent)
Alternative A3—Analysis and Operation
• Analytical results for density of *Salmonella sp.* bacteria or fecal coliform (most probable number) • Analytical results for density of enteric viruses (plaque forming unit/4 grams total solids) prior to pathogen reduction and, when appropriate, after treatment • Analytical results for density of viable helminth ova (number/4 grams total solids) prior to pathogen reduction and, when appropriate, after treatment • Values or ranges of values for operating parameters to indicate consistent pathogen reduction treatment
Alternative A4—Analysis Only
• Analytical results for density of *Salmonella sp.* bacteria or fecal coliform (most probable number) • Analytical results for density of enteric viruses (plaque forming unit/4 grams total solids) • Analytical results for density of viable helminth ova (number /4 grams total solids)

Table 10-4

Recordkeeping Requirements for Class A Pathogen Reduction Alternatives (Continued)

Alternative A5—Processes to Further Reduce Pathogens (PFRP)	
• Heat Drying - Analytical results for density of *Salmonella sp.* bacteria or fecal coliform (most probable number) - Moisture content of dried sludge <10 percent - Logs documenting temperature of sludge particles or wet bulb temperature of exit gas exceeding 80°C • Thermophilic Aerobic Digestion - Analytical results for density of *Salmonella sp.* bacteria or fecal coliform (most probable number) - Dissolved oxygen concentration in digester >1 mg/L - Logs documenting temperature maintained at 55-60°C for 10 days • Heat Treatment - Analytical results for density of *Salmonella sp.* bacteria or fecal coliform (most probable number) - Logs documenting sludge heated to temperatures > 180°C for 30 minutes • Pasteurization - Analytical results for density of *Salmonella sp.* bacteria or fecal coliform (most probable number) - Temperature maintained at or above 70°C for at least 30 minutes	• Composting - Analytical results for density of *Salmonella sp.* bacteria or fecal coliform (most probable number) - Description of composting method - Logs documenting temperature maintained at or above 55°C for 3 days if within vessel or static aerated pile composting method - Logs documenting temperature maintained at or above 55°C for 15 days if windrow compost method - Logs documenting compost pile turned at least five times during the 15day period, if windrow compost method • Gamma Ray Irradiation - Analytical results for density of *Salmonella sp.* bacteria or fecal coliform (most probable number) - Gamma ray isotope used - Gamma ray dosage at least 1.0 megarad - Ambient room temperature log • Beta Ray Irradiation - Analytical results for density of *Salmonella sp.* bacteria or fecal coliform (most probable number) - Beta ray dosage at least 1.0 megarad - Ambient room temperature log
Alternative A6—PFRP Equivalent	
• Operating parameters or pathogen levels as necessary to demonstrate equivalency to the PFRP • Analytical results for density of *Salmonella sp.* bacteria or fecal coliform (most probable number)	

Table 10-5

Recordkeeping Requirements for Class B Pathogen Reduction Alternatives

Alternative B1—Fecal Coliform Count
• Number of samples collected during each monitoring event • Analytical results for density of fecal coliform for each sample collected
Alternative B2—Processes to Significantly Reduce Pathogens (PSRP)
• Aerobic Digestion - Dissolved oxygen concentration - Volatile solids content before and after digestion - Mean residence time of sludge in digester - Logs showing temperature was maintained for sufficient period of time (ranging from 60 days at 15°C to 40 days at 20°C) • Air Drying - Description of drying bed design - Depth of sludge on drying bed - Drying time in days - Daily average ambient temperature • Anaerobic Digestion - Volatile solids content before and after digestion - Mean residence time of sludge in digester - Temperature logs of sludge in digester • Composting - Description of composting method - Daily temperature logs documenting sludge maintained at 40°C for 5 days - Hourly readings showing temperature exceeded 55°C for 4 consecutive hours • Lime Stabilization - pH of sludge immediately and then 2 hours after addition of lime
Alternative B3—PSRP Equivalent
• Operating parameters or pathogen levels as necessary to demonstrate equivalency to PSRP

Table 10-6

Recordkeeping Requirements for Vector Attraction Reduction Sludge Processing Options

Option 1—Volatile Solids (VS) Reduction	**Option 5—Aerobic Processing (Thermophilic Aerobic Digestion/ Composting)**
• Volatile solids concentration of raw and final sludge streams (mg/kg) • Calculations showing 38 percent reduction in volatile solids	• Sludge detention time in digester/composting • Temperature logs showing average temperature above 45°C and minimum temperature above 40°C for 14 consecutive days
Options 2 and 3—Bench-Scale VS Reduction	**Options 6—Alkaline Treatment**
• Description of bench-scale digester • Time (days) that sample was further digested in bench-scale digester (30 days for aerobically and 40 days for anaerobically digested sludge) • Temperature logs showing temperature maintained at 20°C for aerobically or between 30°C and 37°C for anaerobically digested sludge • Volatile solids concentration of sludge (mg/kg) before and after bench-scale digestion	• Logs demonstrating hours pH of sludge/ alkaline mixture was maintained (12 for 2 hours and 11.5 for an additional 22 hours) • Amount of alkaline added to sludge (lbs or gals) • Amount of sludge treated
Option 4—Specific Oxygen Uptake Rate	**Options 7 and 8—Drying**
• Dissolved oxygen readings for sludge sample over 15-minute intervals (mg/L) • Temperature logs showing test was corrected to 20°C • Total solids for sludge sample (g/L) • SOUR calculations (mg/g)	• Results of percent solids (dry weight) test • Presence of unstabilized solids generated during primary treatment

Table 10-7

Sludge Handling Process Evaluation

General Indicators of Problems

- Inadequate sludge removal from clarifiers or thickeners
- Poor dewatering characteristics of thermal treated sludge
- Thickened sludge too thin
- Fouling of overflow weirs on gravity thickeners
- Air flotation skimmer blade binding on beaching plate
- Substantial down-time of sludge treatment units
- Sludge disposal inadequate to keep treatment system in balance
- Mass balance inappropriate (ratio of sludge wasted should be 0.65-0.85 lbs of sludge per lb of BOD removed)
- Sludge decant or return flows high in solids*
- Odors
- Improper loading rates

Anaerobic Digestion Problems

- Inoperative mechanical or gas mixers
- Inoperative sludge heater or low temperature*
- Floating cover of digester tilting
- Inadequate gas production*
- Inoperative gas burner
- Supernatant exuding sour odor from either primary or secondary digester*
- Excessive suspended solids in supernatant
- Supernatant recycle overloading the WWTP
- pH problems*

Aerobic Digestion Problems

- Excessive foaming in tank*
- Objectionable odor in aerobically digested sludge*
- Insufficient dissolved oxygen in digester
- Digester overloaded
- Clogging of diffusers in digester
- Mechanical aerator failure in digester
- Inadequate supernatant removal from sludge lagoons
- Solids accumulation in tank

*Indicates serious problems with the sludge handling process.

Table 10-7

Sludge Handling Process Evaluation (Continued)

Sludge Dewatering Problems

Drying Beds
- Poor sludge distribution on drying beds
- Vegetation in drying beds (unless reed design)
- Dry sludge remaining on drying beds
- Inadequate drying time on drying beds*
- Some unused drying beds
- Dry sludge stacked around drying beds where runoff may enter navigable waters
- Filtrate from sludge drying beds returned to front of plant

Centrifuge
- Excessive solids in fluid phase of sample after centrifugation*
- Inadequate dryness of centrifugal sludge cake*
- Excessive vibration or other mechanical problems

Filter Press
- High level of solids in filtrate from filter presses or vacuum filters*
- Thin filter cake caused by poor dewatering
- Vacuum filter cloth binding
- Low vacuum on filter
- Improperly cleaned vacuum filter media
- Sludge buildup on belts and/or rollers of filter press
- Excessive moisture in belt filter press sludge cake*
- Difficult cake discharge from filter presses
- Filter cake sticks to solids-conveying equipment of filter press
- Frequent media binding of plate filter press
- Sludge blowing out of filter press
- Insufficient run time of sludge dewatering equipment

*Indicates serious problems with the sludge handling process.

Table 10-7

Sludge Handling Process Evaluation
(Continued)

Sludge Stabilization Problems

Lagoon
- Objectionable odor from sludge lagoon
- Damage to dikes around sludge drying lagoons
- Unlined sludge lagoons
- Sludge lagoons full, overflowing sludge back to plant or to natural drainage
- Deep rooted vegetation on dikes or berms

Composting
- Piles that give off foul odor
- Inoperable blower
- Temperature does not reach 122-140°F (50-60°C)
- Uncontrolled storm water runoff

Heat Drying/Pelletizing
- Excess moisture in sludge feed
- Insufficient air flow or drying temperature achieved
- Inadequate drying of final product (excess moisture in final product)
- Excess odors associated with treatment area
- Excess odors associated with treated product

Alkaline Stabilization
- Insufficient amount of lime (or other alkaline additive) used to assure pH is raised sufficiently
- Inadequate mixing provided to assure good contact of lime (or other alkaline additive) with sludge solids
- pH problems*
- Excess odors associated with treatment area
- Excess odors associated with treated product
- Excessive lime dust around treatment equipment

Incineration
- Objectionable odors associated with treatment area
- Evidence of excessive dust (ash) around unit
- Visible smoke or dust exhaust from unit
- Lack of compliance with air permit parameters
- Spilling or leaking sludge from dewatered sludge transfer equipment

*Indicates serious problems with the sludge handling process.

Table 10-7

Sludge Handling Process Evaluation
(Continued)

Sludge Disposal Problems
• Sludge constituents not analyzed before disposal • Sludge not transported in appropriate and approved vehicle • Surface runoff of sludge at land application site • Liquid sludge (i.e., less than 10 percent solids) applied to landfill site • Sludge fails paint filter test • Inadequate coverage of sludge in subsurface plow injection system • Objectionable odors generated at land application site* • Slow drying of soil-sludge mixture in subsurface injection system • Sludge ponding at land application sites • Flies breeding, vectors, and/or odors at landfill site • Inadequate burial of sludge at landfill site • Excessive erosion at sludge sites • Sludge disposed of in nonpermitted sites • Disposal not in accordance with Federal, State, or local regulations • Sludge lagoons full and overflowing* • Inadequate runoff control at landfill or land application sites

*Indicates serious problems with the sludge handling process.

Table 10-8

Pollutants Monitored for Land Application, Surface Disposal, and Incineration

Pollutant	Land Application	Surface Disposal (unlined units)	Incineration
Arsenic	✓	✓	✓
Beryllium			✓
Cadmium	✓		✓
Chromium		✓	✓
Copper	✓		
Lead	✓		✓
Mercury	✓		✓
Molybdenum	✓		
Nickel	✓	✓	✓
Selenium	✓		
Zinc	✓		
Nitrogen series	✓		

Organism to Be Monitored	Allowable Level in Sludge
Fecal Coliform[1]	1,000 Most Probable Number (MPN) per gram (Class A) of total solids (dry weight)
Salmonella sp.[1] bacteria (in lieu of fecal coliform)	3 MPN per 4 grams total solids (dry weight)
Enteric Viruses[2]	Less than one plaque-forming unit per 4 grams total solids (dry weight)
Viable Helminth[2] Ova	Less than one viable helminth ovum per 4 grams of total solids (dry weight)
Fecal Coliform[3]	Less than 2×10^6 MPN or less than 2×10^6 colony-forming units per gram of total solids (dry weight) (expressed as geometric mean of the results of 7 individual samples)

[1]All Part 503 Class A Alternatives 1, 2, 3, 4, 5, 6
[2]Class A Alternatives 3 and 4 only
[3]Class B, Alternative 1

10. C. References and Sludge Inspection Checklist

References

I. GENERAL

Clark, J.W., W. Wiessman and M. Hammer, *Water Supply Pollution Control*. (Harper and Row Publishers, 1977).

Code of Federal Regulations. *Standards for the Use or Disposal of Sewage Sludge*. 40 *CFR* Part 503, FR 9387.

Culp, G.L., and N. Folks Heim. January 1978. *Field Manual for Performance Evaluation and Troubleshooting at Municipal Wastewater Treatment Facilities*. U.S. Environmental Protection Agency, EPA 430/9-78-001.

Hinrichs, D.J. *Inspectors Guide for Evaluation of Municipal Wastewater Treatment Plants*. April 1979. U.S. Environmental Protection Agency, 430/9-79-010.

Metcalf and Eddy Inc. *Wastewater Engineering: Treatment Disposal/Reuse*. (McGraw-Hill Book Company, 1979).

Steel, E.W., and T.J. McGhee, *Water Supply and Sewerage*. (McGraw-Hill Book Company, 1979).

U.S. Congress. March 1985. *Overview of Sewage Sludge and Effluent Management*. Office of Technology Assessment, C/R-36b/#10.

U.S. Environmental Protection Agency. January 1975. *Process Design Manual for Suspended Solids Removal*. EPA 625/1-75-0032.

U.S. Environmental Protection Agency. April 1976. *Municipal Sludge Management: EPA Construction Grants Program*. Office of Water Program Operations, EPA 430/9-76/009.

U.S. Environmental Protection Agency. October 1977. *Municipal Sludge Management: Environmental Factors*. Office of Water Program Operations, EPA 430/9-77/004.

U.S. Environmental Protection Agency. 1978. *Operations Manual, Sludge Handling and Conditioning.* Office of Water Program Operations, EPA 430/9-78-002.

U.S. Environmental Protection Agency. September 1979. *Process Design Manual for Sludge Treatment and Disposal*. Municipal Environmental Research Laboratory, EPA 625/1-79-011.

U.S. Environmental Protection Agency. February 1980. *Evaluation of Sludge Management Systems*. Office of Water Program Operations, EPA 430/9-80-001, MCD-61.

U.S. Environmental Protection Agency. September 1984. *Use and Disposal of Municipal Wastewater Sludge*. Intra-Agency Sludge Task Force, EPA 625/10-84-003.

U.S. Environmental Protection Agency. July 1985. *Summary of Environmental Profiles and Hazard Indices for Constituents of Municipal Sludge*. Office of Water Regulations and Standards.

U.S. Environmental Protection Agency. 1987. *Advanced Waste Treatment — Field Study Training Program*.

U.S. Environmental Protection Agency. September 1994. *A Plain English Guide to the EPA Part 503 Biosolids Rule*. EPA 831-B-94-001.

U.S. Environmental Protection Agency. December 1994. *A Guide for Land Appliers on the Requirements of the Fed*eral Standards for the Use or Disposal of Sewage Sludge, 40 *CFR* Part 503. EPA/831-B-93-002b.

U.S. Environmental Protection Agency. September 1995. *A Guide to the Biosolids Risk Assessments for the EPA Part 503 Rule*. EPA 832-B-93-005.

U.S. Environmental Protection Agency. December 1999. *Proposed Rule Revising the Standards for Use and Disposal of Biosolids*. EPA 822-F-99-005.

U.S. Environmental Protection Agency. September 2000. *Biosolids Technology Fact Sheet Alkaline Stabilization of Biosolids*. EPA 832-F-00-052.

U.S. Environmental Protection Agency. September 2000. *Biosolids Technology Fact Sheet Centrifuge Thickening and Dewatering*. EPA 832-F-00-053.

U.S. Environmental Protection Agency. September 2000. *Biosolids Technology Fact Sheet Belt Filter Press*. EPA 832-F-00-057.

II. SAMPLING SLUDGE QUALITY

U.S. Environmental Protection Agency. August 1989. *POTW Sludge Sampling and Analysis Guidance Document*. Office of Water Enforcement and Permits.

U.S. Environmental Protection Agency. August 1988. *Sampling Procedures and Protocols for the National Sewage Sludge Survey*. Office of Water Regulations and Standards.

U.S. Environmental Protection Agency. September 1990. *Analytical Methods for the National Sewage Sludge Survey*. Office of Water Regulations and Standards.

U.S. Environmental Protection Agency. November 1991. *Guidance Manual for NPDES Compliance Inspector: Evaluation of Sludge Treatment Processes*. EPA 833/B-91-100.

U.S. Environmental Protection Agency. November 1991. *Guidance Manual for NPDES Compliance Inspector: Verifying Compliance with Sludge Requirements*.

U.S. Environmental Protection Agency. 1993. Sewage Sludge Sampling Techniques Video.

III. PATHOGENS

U.S. Environmental Protection Agency. July 2003. *Control of Pathogens and Vector Attraction in Sewage Sludge.* Office of Research and Development, EPA 625/R-92/013.

U.S. Environmental Protection Agency. September 1989. *Control of Pathogens in Municipal Wastewater Sludge*. Center for Environmental Research Information, EPA 625/10-89/006.

U.S. Environmental Protection Agency. December 1973. *Pathogen Risk Assessment Feasibility Study*. Office of Research and Development, EPA 670/2-73/098.

IV. LAND APPLICATION

Loeht, R.C. *Pollution Control for Agriculture*. Academic Press Inc., 1984.

National Research Council. July 2002. *Biosolids Applied to Land: Advancing Standards and Practices.*

U.S. Environmental Protection Agency. August 1993. *Preparing Sewage Sludge for Land Application or Surface Disposal; A Guide for Preparers of Sewage Sludge on the Monitoring, Recordkeeping, and Reporting Requirements of the Federal Standards for the Use or Disposal of Sewage Sludge in 40 CFR Part 503.* Office of Water, EPA 831 B-93-002a.

U.S. Environmental Protection Agency. *Land Application of Sewage Sludge; A Guide for Land Appliers on the Recordkeeping and Reporting Requirements of the Federal Standards for the Use and Disposal of Sewage Sludge Management in 40 CFR Part 503.*

U.S. Environmental Protection Agency. October 1983. *Land Application of Municipal Sludge*, Municipal Environmental Research Laboratory, EPA 625/1-83/016.

U.S. Environmental Protection Agency. November 1976. *Application of Sewage Sludge to Cropland; Appraisal of Potential Hazards of the Heavy Metals to Plants and Animals*. Office of Water Program Operations, EPA 430/9-76/013.

U.S. Environmental Protection Agency. June 1978. *Applications of Sludge on Agricultural Land*. Municipal Construction Division, Office of Research and Development, EPA 600/2-78/131b.

U.S. Environmental Protection Agency. June 1978. *Sewage Disposal on Agricultural Soils: Chemical and Microbiological Implications*. Office of Research and Development, EPA 600/2-78/131b.

U.S. Environmental Protection Agency. October 1981. *Land Treatment of Municipal Wastewater*. EPA Center for Environmental Research Information, EPA 625/1-81-013.

U.S. Environmental Protection Agency. September 1993. *A Guide to the Federal EPA Rule for Land Application of Domestic Septage to Non-Public Contact Sites. (Agricultural Land, Forests, and Reclamation Sites) Discussed in Relationship to Existing State Rules and Other Federal Regulations of Septage*. EPA 832-B-92-005.

U.S. Environmental Protection Agency. December 1994. *Land Application of Sewage Sludge: A Guide for Land Appliers on the Requirements of the Federal Standards for the Use and Disposal of Sewage Sludge, 40 CFR Part 503.* EPA 831-B-93-002b.

V. LANDFILLING

U.S. Environmental Protection Agency. May 1994. *Surface Disposal of Sewage Sludge; A Guide for Owners/Operators of Surface Disposal Facilities on the Monitoring, Recordkeeping, and Reporting Requirements of the Federal Standards for the Use and Disposal of Sewage Sludge in 40 CFR Part 503.*

U.S. Environmental Protection Agency. October 1978. *Municipal Sludge Landfills.* Environmental Research Information Center, Office of Solid Waste, EPA 625/1-78/010, SW-705.

VI. DISTRIBUTION AND MARKETING

U.S. Environmental Protection Agency. August 1985. *Composting of Municipal Wastewater Sludges.* EPA Center for Environmental Research Information, EPA 625/4-85-014.

U.S. Environmental Protection Agency. June 1981. *Composting Processes to Stabilize and Disinfect Municipal Sewage Sludge.* Office of Water Program Operations, EPA 430/9-81-011, MCD-79.

VII. INCINERATION

U.S. Environmental Protection Agency. September 1985. *Municipal Wastewater Sludge Combustion Technology.* EPA Center for Environmental Research Information, EPA 625/4-85-015.

VIII. MISCELLANEOUS

U.S. Environmental Protection Agency. September 1987. *Dewatering Municipal Wastewater Sludges*, Office of Research and Development. EPA 625/1-87/014.

U.S. Environmental Protection Agency. December 1973. *Odors Emitted From Raw and Digested Sewage Sludge.* Office of Research and Development, EPA 670/2-73/098.

U.S. Environmental Protection Agency. October 1982. *Process Design Manual for Dewatering Municipal Wastewater Sludges.* Office of Research and Development, EPA 625/1-82-014.

U.S. Environmental Protection Agency. April 1986. *Radioactivity of Municipal Sludge.* Office of Water Regulations and Standards.

U.S. Environmental Protection Agency. Most recent *Test Methods for Evaluating Solid Waste, Physical/Chemical Methods.* EPA SW-846.

U.S. Environmental Protection Agency. 1990. *NPDES Compliance Monitoring Inspector Training Module on Laboratory Analysis*.

U.S. Environmental Protection Agency. July 2000. *Guide to Field Storage of Biosolids*. EPA 832-B-00-007

This page intentionally left blank.

SLUDGE INSPECTION CHECKLIST

A. PERMIT VERIFICATION

Yes No N/A	1. Are 40 *CFR* Part 503 sludge use and disposal requirements contained in a current NPDES permit, in a separate "sludge only" NPDES permit, in a RCRA Subtitle C permit, or in a CAA permit? [503.3(a)(1) or (2)] (1)
	2. Sludge use and disposal practice(s):
Yes No N/A	a. Land Application ____ [503.10] Bulk Sewage Sludge ____ [503.11(e)] Bulk Material Derived from Sewage Sludge ____ [503.11(e)] Or Sold or Given Away in a Bag or Other Container ____ [503.11(e)]
Yes No N/A	b. Surface Disposal ____ [503.20]
Yes No N/A	c. Sewage Sludge Incineration ____ [503.40]
Yes No N/A	d. Onsite or Offsite Storage ____ [503.9(y)] Date storage began ____ ended ____ (Maximum time allowed: 2 years from February 19, 1993)
Yes No N/A	e. Other (list)_____
Yes No N/A	3. Each sludge use or disposal practice is permitted? [503.3(a)(1)] (1)
Yes No N/A	4. Notification is given to EPA/State of new or different sludge disposal method? [Permit]
Yes No N/A	5. Number and location of disposal sites/activities are as described in the permit or fact sheet or land application plan (40 *CFR* Part 501)? [Permit]
Comments:	

SLUDGE INSPECTION CHECKLIST (Continued)

B. RECORDKEEPING AND REPORTING EVALUATION

Yes No N/A	1. Self-monitoring data are available for all regulated pollutants? [503.17], [503.27], [503.43]
Yes No N/A	2. Pathogen and vector attraction reduction method description and certification statement available? [503.17], [503.27]
Yes No N/A	3. Records are available for all use or disposal practices? [503.17], [503.27], [503.47]
Yes No N/A	4. Accurate records of sludge volume or mass are maintained, when appropriate? [503.25], [503.47]
Yes No N/A	5. Monitoring and analyses are performed more often than required by permit? If so, results are reported in the permittee's self-monitoring report? [Permit]
Yes No N/A	6. Unit operations records verify compliance with pathogen and vector attraction reduction requirements, when appropriate? [503.15], [503.25]
Yes No N/A	7. Self-monitoring is conducted at the frequency specified in the permit, in 503.16 Table 1 (land application), or in 503.26 Table 1 (surface disposal)? [503.16], [503.26] or [503.46 Table 1 (incineration)] (Production dependent 0-289 mtpy: 1/yr., 290-1499 mtpy: 1/qtr., 1500-14999 mtpy: ½ mo., 15000 mtpy and greater, 1/mo.) mtpy-metric ton per year
Yes No N/A	8. Facility reports sludge monitoring data at the frequency specified in the permit? (Only for Class I facilities, total design flow >1 mgd, or serving >10,000 people) [503.18], [503.28], [503.48]
Yes No N/A	9. Sludge records are maintained for at least 5 years? [503.17], [503.27], [503.47]
Yes No N/A	10. Sludge data are reported on Discharge Monitoring Report (DMR) or approved form? [Permit]
Yes No N/A	11. Sludge records are adequate to assess compliance with annual and/or cumulative pollutant loading rates or other established permit limits? [503.13(a) (2) (i)], [503.13(a) (4) (ii)]
Comments:	

SLUDGE INSPECTION CHECKLIST (Continued)

C. SLUDGE SAMPLING AND ANALYSIS EVALUATION

Yes No N/A	1. Sludge samples are taken at locations specified in the permit? [Permit]
Yes No N/A	2. Sludge sample locations are appropriate for obtaining representative samples? [503.8(a)]
Yes No N/A	3. Sampling and analysis are conducted for parameters specified in the permit or in 40 *CFR* Part 503? [Permit], [503.13], [503.23], [503.46]
	4. Sample collection procedures
Yes No N/A	a. Adequate sample volumes are obtained?
Yes No N/A	b. Proper preservation techniques are used?
Yes No N/A	c. Containers conform to appropriate analytical method specified in 40 *CFR* 503.8?
Yes No N/A	d. Samples analyzed in the appropriate time frames in accordance with 40 *CFR* 503.8?
Yes No N/A	5. Are results reported on a dry weight basis? [503.13], [503.23], [503.43] (Dry weight concentration = Wet weight concentration/Decimal fraction of solids) e.g. A sludge containing 20 mg/l Cu and having 5% solids. Dry weight Cu (mg/kg) = 20 mg/1 = 400 mg/kg 0.05
Yes No N/A	6. Sample is refrigerated subsequent to compositing?
Yes No N/A	7. Chain-of-custody procedures are employed?
Yes No N/A	8. Analytical methods used are approved methods of 40 *CFR* 503.8?
Comments:	

SLUDGE INSPECTION CHECKLIST (Continued)

D. UNIT PROCESSES

General Sludge Processes

Yes No N/A	1.	Sludge process control parameters maintained as appropriate?
Yes No N/A	2.	Adequate equipment redundancy (e.g., back-up units)?
Yes No N/A	3.	Adequate sludge storage capacity?
Yes No N/A	4.	Contingency plan for sludge disposal practice?
Yes No N/A	5.	Solids handling operation adequate to manage volume of sludge?
Comments:		

Drying Beds, Gravity Thickener, Centrifuge, and Dissolved Air Floatation

Yes No N/A	1.	Is primary unstabilized sludge fed to the thickener, centrifuge or drying bed? If yes, list percentage of unstabilized sludge _____.
Yes No N/A	2.	What is the average % solids of the sludge before thickening, drying or centrifuging? _____ % after? _____ %
Yes No N/A	3.	Is sludge mixed with other materials before or after thickening?
Yes No N/A	4.	For sludge containing unstabilized solids, is the percent solids greater than 90% prior to mixing with other materials?
Yes No N/A	5.	For sludge containing no unstabilized solids, is the percent solids greater than 75% prior to mixing with other materials?
Comments:		

SLUDGE INSPECTION CHECKLIST (Continued)

D. UNIT PROCESSES (Continued)

Anaerobic Digestion

		1. Sludge fed to digester(s) includes: ___Primary ___Secondary ___Combined
		2. Digester(s) operating mode: ___high rate ___ low rate
Yes No N/A		3. Digester(s) are operated at proper temperature [mesophilic: 95°F (35°C) and thermophilic: 131°F (55°C)? List operating mode: ___ mesophilic ___ thermophilic
Yes No N/A		4. Temperature monitoring location and frequency sufficient to demonstrate compliance with Class B pathogen reduction requirements for PSRP? Average Temperature: ____°C or °F
Yes No N/A		5. Solids Retention Time (SRT) or Mean Cell Residence time (MCRT) calculated properly?*
Yes No N/A		6. SRT or MCRT sufficient to demonstrate compliance with Class B pathogen reduction requirements for PSRP? Average SRT or MCRT: ____days *For batch operated digesters with no recycle: SRT or MCRT = Mass of solids in digester, kg / Solids removed, kg/day This formula can be used to estimate SRT or MCRT for all digester systems. For calculating SRT or MCRT for other system configurations, use the WEF Manual of Practice or other references. Always write down the calculation used by the facility no matter what the configuration is.
Comments:		

SLUDGE INSPECTION CHECKLIST (Continued)

D. UNIT PROCESSES (Continued)

Aerobic Digestion

	1.	Sludge fed to digester(s) includes: ___Primary ___Secondary ___Combined
	2.	Digester(s) operating mode: ___high rate ___ low rate
Yes No N/A	3.	Digester(s) are operated at proper temperature [cryophilic: <50°F (<10°C), mesophilic: 50-108°F (10-42°C), and thermophilic: >108°F (42°C)]? List operating mode: ___ cryophilic ___ mesophilic ___ thermophilic
Yes No N/A	4.	Temperature monitoring location and frequency sufficient to demonstrate compliance with Class B pathogen reduction requirements for PSRP or with Class A pathogen reduction requirements for PFRP (Thermophilic aerobic digestion only)? Average Temperature: ____°C or °F
Yes No N/A	5.	Solids Retention Time (SRT) or Mean Cell Residence time (MCRT) calculated properly?*
Yes No N/A	6.	SRT or MCRT sufficient to demonstrate compliance with Class B pathogen reduction requirements for PSRP or with Class A pathogen reduction requirements for PFRP (Thermophilic digestion only)? Average SRT or MCRT: ____days
Yes No N/A	7.	Aerobic conditions verified through dissolved oxygen monitoring? *For batch operated digesters with no recycle: SRT or MCRT = Mass of solids in digester, kg / Solids removed, kg/day This formula can be used to estimate SRT or MCRT for all digester systems. For calculating SRT or MCRT for other system configurations, use the WEF Manual of Practice or other references. Always write down the calculation used by the facility no matter what the configuration is.
Comments:		

SLUDGE INSPECTION CHECKLIST (Continued)

D. UNIT PROCESSES (Continued)

Composting

		1. Type of composting performed: ____ In vessel ____ Static piles ____ Windrows
		2. Type of sludge composted: ____ Primary ____ Secondary ____ Combined
Yes No N/A		3. Is the moisture content monitored?
Yes No N/A		4. Is compost mixed? Method? _____ Frequency of turnings? _____
Yes No N/A		5. Is oxygen content monitored?
Yes No N/A		6. Is temperature monitored?
Yes No N/A		7. Are total and total volatile solids monitored?
		8. Active phase ____ days Curing phase ____ days
Yes No N/A		9. Is site runoff treated? Where? _____
Yes No N/A		10. Temperature monitoring location and frequency sufficient to demonstrate compliance with Class B pathogen reduction requirements for PSRP or with Class A pathogen reduction requirements for PFRP?
Yes No N/A		11. Temperature and/or oxygen monitoring sufficient to determine compliance with vector attraction reduction requirements?
Comments:		

SLUDGE INSPECTION CHECKLIST (Continued)

E. LAND APPLICATION OF SEWAGE SLUDGE

Yes No N/A	1. Sewage sludge or material derived from sewage sludge is land applied to: Agricultural Land _____ Forest _____ Reclamation Site _____ Lawn or Home Garden _____ Public Contact Site (park, etc.) _____
Yes No N/A	2. Do monitoring results show pollutant concentrations below values shown in 40 *CFR* 503.13(b)(1) Table 1? [503.13(a)(1)] (2)
Yes No N/A	3. Do monitoring results show pollutant concentrations below values shown in 40 *CFR* 503.13(b)(3)? (3)
	4. Classifications of Sewage Sludge with respect to Pathogens: [503.30] (4) Class A _____ Class B _____ Unknown _____
Yes No N/A	5. Are Class A Pathogen reductions requirements met? [503.15(a)] (4)
	6. Indicate which method is used to meet Class A requirements: [503.32(a)] ___ Fecal Coliform <1000 MPN/g total solids, or Salmonella <3 MPN/4 g total solids, and Time/Temperature requirements. [503.32(a)(3)] ___ Fecal Coliform <1000 MPN/g total solids, or Salmonella <3 MPN/4 g total solids, and pH requirements. [503.32(a)(4)] ___ Fecal Coliform <1000 MPN/g total solids, or Salmonella <3 MPN/4 g total solids, and enteric viruses or helminth ova reduction requirements. [503.32(a)(5)] ___ Fecal Coliform <1000 MPN/g total solids, or Salmonella <3 MPN/4 g total solids, and enteric viruses or helminth ova density requirements. [503.32(a)(6)] ___ Fecal Coliform <1000 MPN/g total solids, or Salmonella <3 MPN/4 g total solids, and Process to Further Reduce Pathogens (PFRP). [503.32(a)(7)] and [503 Appendix B] (5) ___ Fecal Coliform <1000 MPN/g total solids, or Salmonella <3 MPN/4 g total solids, and equivalent PFRP. [503.32(a)(8)] and [503 Appendix B] (5)
Yes No N/A	7. Are Class B Pathogen reduction requirements met? [503.32(b)] (4)
	8. Indicate which method(s) is used to meet Class B requirements: ___ Geometric mean of seven Fecal Coliform samples with <2,000,000 MPN/g total solids or <2,000,000 Colony Forming Units/g total solids. [503.32(b)(2)] ___ Treated by Process to Significantly Reduce Pathogens (PSRP). [503.32(b)(3)] and [503 Appendix B] (5) Treated by equivalent PSRP. [503.32(b)(4)] and [503 Appendix B] (5)

SLUDGE INSPECTION CHECKLIST (Continued)

E. LAND APPLICATION OF SEWAGE SLUDGE (Continued)

Yes No N/A	9. For Class B sludge which is land applied, are Site Restrictions practiced? [503.32 (b)(5)] [4]
Yes No N/A	10. Indicate Site Restrictions practiced where applicable: ___ Food crops (above ground) are harvested >14 months after application of sewage sludge? [503.32(b)(5)(i)] ___ Food Crops (below ground) are harvested >20 months after application of sewage sludge when sludge stays on land for >4 months prior to incorporation into soil? [503.32(b)(5)(ii)] ___ Food Crops (below ground) are harvested >38 months after application of sewage sludge when sludge stays on land for <4 months prior to incorporation into soil? [503.32(b)(5)(iii) ___ Food Crops, feed crops, and fiber crops are harvested >30 days after application of sewage sludge? [503.32(b)(5)(iv)] ___ Animal grazing allowed on land only >30 days after application of sewage sludge? [503.32(b)(5)(v)] ___ Turf grown on land where sewage sludge was applied placed on high public expose land or lawn is harvested >1 year after application of sewage sludge? [503.32(b)(5)(vi)] ___ Public access is restricted to land with a potential for high public exposure for 1 year? [503.32(b)(5)(vii)] ___ Public access is restricted to land with a potential for low public exposure for 30 days? [503.32(b)(5)(viii)]
Yes No N/A	11. Is a Vector Attraction Reduction method practiced? [503.15(c)] [6]
Yes No N/A	12. Indicate Vector Attraction Reduction method: [503.33(b)] ___ 38% Volatile Solids Reduction. [503.33(b)(1)] [7] ___ 40 day test - Volatile Solids reduced <17%. [503.33(b)(2)] (Anaerobic Digestion Only) ___ 30 day test - Volatile Solids reduced <15%. [503.33(b)(3)] (Aerobic Digestion Only) ___ Specific Oxygen Uptake Rate (SOUR) <1.5 mg/hr/gm TS @ 20°C. [503.33(b)(4)] ___ Aerobic Process for >14 days @ >40°C with average sludge temperatures >45°C. [503.33(b)(5)] ___ pH >12 for 2 hours and pH >11.5 for 22 hours [503.33(b)(6)] ___ Sludge (with no unstabilized solids) contains >75% Total Solids prior to mixing with other materials. [503.33(b)(7)] ___ Sludge (contains unstabilized solids) contains >90% Total Solids prior to mixing with other materials. [503.33(b)(8)]

SLUDGE INSPECTION CHECKLIST (Continued)

E. LAND APPLICATION OF SEWAGE SLUDGE (Continued)

	___ Subsurface Injection. [503.33(b)(9)] ___ Soil Incorporation. [503.33(b)(10)]
Yes No N/A	13. Are general requirements (503.12) and management practices (503.14) applied for sludge not meeting Table 3 pollutant concentrations, Class pathogen reduction requirements, and vector attraction reduction methods? [503.10], [503.12], [503.14]
Yes No N/A	14. Indicate management practices where applicable: ___ No threatened or endangered species present or critical habitat affected at the location(s) where bulk sludge is applied. ___ Bulk sludge not applied to frozen or snow covered ground. ___ Bulk sludge applied >10 meters from waters of the U.S. ___ Bulk sludge applied at a rate equal to or less than agronomic rate. ___ Label affixed on bag or information sheet provided to user of sold and given away sludge indicating name of sludge preparer, application instructions, and maximum annual whole sludge application rate.
Yes No N/A	15. Indicate general requirements practiced where applicable: ___ Sludge is not applied to a site where the cumulative pollutant loading or annual application rate has been reached. ___ Notification given to the sludge applier regarding total nitrogen content of the sludge. ___ Sufficient information required to comply with 40 *CFR* Part 503 is given to preparers/appliers/land owners. ___ Written notification given to permitting authority (including States) regarding the location of land application sites, appropriate NPDES permit numbers.
Yes No N/A	16. Description of how management practices are met for each land application site available?
Comments:	

SLUDGE INSPECTION CHECKLIST (Continued)

Land Application Footnotes

(1) Permits are not required. Part 503 is self-implementing. Part 503 does not cover industrial sludges or grit and screenings.

(2) 503.13(b)(1), Table 1 values must be met to land apply sludge:

Table 1 (mg/kg)

Arsenic	75	Lead	840	Nickel	420
Cadmium	85	Mercury	57	Selenium	100
Copper	4300	Molybdenum	75	Zinc	7500

(3) 503.13(b)(3), Table 3 must be met for any sludge applied to a lawn or home garden. For bulk sludge, Table 3 must be met or the sludge is subject to cumulative loading limits in 503.13(b)(2). For sewage sludge sold and given away in a bag or other container, Table 3 must also be met or the sludge is subject to annual pollutant loadings in 503.13(b)(4). This also signals that additional recordkeeping requirements of 503.12 and 503.17 apply.

Table 3 (mg/kg)

Arsenic	41	Lead	300	Selenium	100
Cadmium	39	Mercury	17	Zinc	2800
Copper	1500	Nickel	420		

(4) Class A requirements must be met when bulk sludge is land applied to a lawn or home garden, or when sewage sludge is sold or given away in a bag or other container. Also, Class A requirements or Class B requirements combined with appropriate site restrictions must be met for when bulk or bulk material derived from sludge is applied to agricultural land, reclamation site, forest, or public contact site.

(5) Process to Significantly Reduce Pathogens (PSRP) includes Aerobic Digestion, Air Drying, Anaerobic Digestion, Composting, and Lime Stabilization. Process to Further Reduce Pathogens (PFRP) includes Composting, Heat Drying, Heat Treatment, Thermophilic Aerobic Digestion, Beta Ray Irradiation, Gamma Ray Irradiation, and Pasteurization. Each process has required operating conditions to demonstrate compliance. See 503 Appendix B and Unit Process Checklists.

(6) One of the methods 503.33(b)(1)-(10) must be used when land applying bulk sewage sludge to agricultural land, forest, a public contact site, or a reclamation site. One of the methods 503.33(b)(1)-(8) must be met when land applying bulk sludge to a lawn or home garden, or when sewage sludge or derived material is sold or given away in a bag or other container.

(7) Volatile solids reduction through the sludge treatment train [only] is generally calculated using the Van Kleek equation. :

Other Variations of this formula are presented in the document Environmental Regulations and Technology-Control of Pathogens and Vector Attraction in Sewage Sludge, EPA-625/R-92/013. See document for specific calculations. Website: http://www.epa.gov/ORD/NRMRL/Pubs/1992/625R92013.html

SLUDGE INSPECTION CHECKLIST (Continued)

F. SURFACE DISPOSAL

Yes No N/A	1. Does each Surface Disposal Unit (SDU) have a liner and leachate collection system?
	2. Smallest distance from active SDU boundary to property boundary is _____ ft.
Yes No N/A	3. For an active SDU (property boundary is greater that 150 meters from SDU) and without a liner or leachate collection system, do monitoring results show pollutant concentrations below values shown in 40 *CFR* 503.23(a)(1) Table 1? [503.23(a)(1)][(1)]
Yes No N/A	4. For an active SDU without a liner and leachate collection system (property boundary is less than 150 meters from SDU), do monitoring results show pollutant concentrations below values shown in 40 *CFR* 503.23(a)(2) Table 2? [503.23(a)(1)][(2)]
Yes No N/A	5. Are management practices employed? [503.24]
Yes No N/A	6. List management practices where applicable: ___ No threatened or endangered species present or critical habitat affected at the location where bulk sludge is surface disposed. ___ Surface disposal unit shall not restrict flow of base flood. ___ If in seismic impact zone, design will withstand recorded horizontal ground acceleration. ___ Located > 60 meters from any fault displaced in Holocene time. ___ Not located in unstable area or wetlands. ___ Runoff collection and treatment with 25-year 24-hour storm runoff event storage capacity. ___ Leachate collection system operated and maintained for 3 years after closure of the surface disposal unit. ___ Leachate treated and disposed of in accordance with applicable requirements, i.e., NPDES permit. ___ Methane is contained under covered units at a concentration less than 25% of the LEL for methane. ___ Methane is contained under a final cover placed on a closed unit maintained at a concentration less than 25% of the LEL for methane for three years after closure. ___ Methane concentration at the property line is maintained at a concentration less than the LEL for methane for three years after closure of the unit. ___ No feed or food crops grown on active unit. [(3)] ___ No animal grazing allowed on active unit. [(3)]

SLUDGE INSPECTION CHECKLIST (Continued)

F. SURFACE DISPOSAL (Continued)

	___ Public access restricted for the period of time while a unit is active and for three years after last active unit in a site closes. ___ Sludge placed in an active unit does not contaminate groundwater aquifers. [4]
Yes No N/A	7. Classification of Sewage Sludge with respect to Pathogens: [503.30] Class A _____ Class B _____ Unknown _____
Yes No N/A	8. Are Class A Pathogen reductions requirements met? [503.15(a)] [5]
	9. Indicate which method is used to meet Class A requirements: [503.32(a)] ___ Fecal Coliform <1000 MPN/g total solids, or Salmonella <3 MPN/4 g total solids, and Time/Temperature requirements. [503.32(a)(3)] ___ Fecal Coliform <1000 MPN/g total solids, or Salmonella <3 MPN/4 g total solids, and pH requirements. [503.32(a)(4)] ___ Fecal Coliform <1000 MPN/g total solids, or Salmonella <3 MPN/4 g total solids, and enteric viruses or helminth ova reduction requirements. [503.32(a)(5)] ___ Fecal Coliform <1000 MPN/g total solids, or Salmonella <3 MPN/4 g total solids, and enteric viruses or helminth ova density requirements. [503.32(a)(6)] ___ Fecal Coliform <1000 MPN/g total solids, or Salmonella <3 MPN/4 g total solids, and Process to Further Reduce Pathogens (PFRP). [503.32(a)(7)] and [503 Appendix B] ___ Fecal Coliform <1000 MPN/g total solids, or Salmonella <3 MPN/4 g total solids, and equivalent PFRP. [503.32(a)(8)] and [503 Appendix B] [7]
Yes No N/A	10. Are Class B Pathogen reduction requirements met? [503.32(b)] [5]
	11. Indicate which method(s) is used to meet Class B requirements: ___ Geometric mean of seven Fecal Coliform samples with <2,000,000 MPN/g total solids or <2,000,000 Colony Forming Units/g total solids. [503.32(b)(2)] ___ Treated by Process to Significantly Reduce Pathogens (PSRP). [503.32(b)(3)] and [503 Appendix B] [6] ___ Treated by equivalent PSRP. [503.32(b)(4)] and [503 Appendix B] [6]
Yes No N/A	12. Is a Vector Attraction Reduction method practiced? [503.25(b)] [7]
Yes No N/A	13. Indicate Vector Attraction Reduction method: [503.33(b)] ___ 38% Volatile Solids Reduction. [503.33(b)(1)] ___ 40 day test - Volatile Solids reduced <17%. [503.33(b)(2)] (Anaerobic Digestion Only)

SLUDGE INSPECTION CHECKLIST (Continued)

F. SURFACE DISPOSAL (Continued)

	___ 30 day test - Volatile Solids reduced <15%. [503.33(b)(3)] (Aerobic Digestion Only) ___ Specific Oxygen Uptake Rate (SOUR) <1.5 mg/hr/gm TS @ 20°C. [503.33(b)(4)] ___ Aerobic Process for >14 days @ >40°C with average sludge temperatures >45°C. [503.33(b)(5)] ___ pH >12 for 2 hours and pH >11.5 for 22 hours [503.33(b)(6)] ___ Sludge (with no unstabilized solids) contains >75% Total Solids prior to mixing with other materials. [503.33(b)(7)]
	___ Sludge (contains unstabilized solids) contains >90% Total Solids prior to mixing with other materials. [503.33(b)(8)]
	___ Subsurface Injection. [503.33(b)(9)] ___ Soil Incorporation. [503.33(b)(10)] ___ Sludge covered with soil or other material at the end of the day. [503.33(b)(11)]
Yes No N/A	14. Have any SDUs been closed?
Yes No N/A	15. Has facility submitted closure and post closure plan for any active SDU 180 days prior to closing? [503.22(c)]
Comments:	

SLUDGE INSPECTION CHECKLIST (Continued)

Surface Disposal Footnotes

(1) Table 1 of 503.23(a)(1) must be met for all sludge placed in an active surface disposal unit with a distance of greater than 150 meters from the boundary of the surface disposal unit to the property line. Site-specific limits can also be set by the permitting authority in accordance with 503.23(b).

Table 1 (mg/kg - dry weight basis)

Arsenic	73	Chromium	600	Nickel	420

(2) Table 2 of 503.23(a)(2) must be met for all sludge placed in an active surface disposal unit with a distance of less than 150 meters from the boundary of the surface disposal unit to the property line. Site-specific limits can also be set by the permitting authority in accordance with 503.23(b).

Table 2 (mg/kg - dry weight basis)

Distance between unit boundary and property line (m)	Pollutant Concentration (mg/kg)		
	Arsenic	Chromium	Nickel
0 to less than 25	30	200	210
25 to less than 50	34	220	240
50 to less than 75	39	260	270
75 to less than 100	46	300	320
100 to less than 125	53	360	390
125 to less than 150	62	450	420

(3) Unless specific approval from the permitting authority has been obtained by the facility.

(4) Facility must have results of groundwater monitoring study developed by a qualified groundwater scientist or a certification from a qualified groundwater scientist to demonstrate no contamination.

(5) Facility must meet Class A pathogen reduction requirements of 503.32(a) or Class B 503.32(b)(2) through (b)(4) unless vector attraction reduction method 503.33(b)(11), covering sludge at the end of the day, is used.

(6) Process to Significantly Reduce Pathogens (PSRP) includes Aerobic Digestion, Air Drying, Anaerobic Digestion, Composting, and Lime Stabilization. Process to Further Reduce Pathogens (PFRP) includes Composting, Heat Drying, Heat Treatment, Thermophilic Aerobic Digestion, Beta Ray Irradiation, Gamma Ray Irradiation, and Pasteurization. Each process has required operating conditions to demonstrate compliance. See 503 Appendix B and Unit Process Checklist.

(7) Facility must meet vector attraction reduction requirements of 503.33(b) to surface dispose sludge.

SLUDGE INSPECTION CHECKLIST (Continued)

G. SEWAGE SLUDGE INCINERATION

Yes No N/A	1. Does the incinerator meet the definition of a sewage sludge incinerator?
Yes No N/A	2. Do sewage sludge monitoring results show pollutant concentrations below permit limits?
Yes No N/A	3. Does THC monitoring show concentrations below 100 ppm (monthly average)?
Yes No N/A	4. Are there instruments installed that continuously measure and record THC (or alternatively CO), oxygen concentration, moisture content, and combustion temperatures?
Yes No N/A	5. Is the THC instrument calibrated as required by 503.45 (once every 24-hour period using propane) or the permit?
Yes No N/A	6. Are the other instruments calibrated as required by the permit?
Yes No N/A	7. Are the instruments operated and maintained as specified by the permit?
Yes No N/A	8. How many times was the incinerator operated at above the maximum combustion temperature specified in the permit? _____ For how long was the incinerator in operation above the maximum combustion temperature? _____
Yes No N/A	9. How many times was the incinerator operated outside the range of the air pollution control devices operating parameters specified in the permit? _____ For how long was the incinerator in operation outside the ranges? _____
Yes No N/A	10. Are the following records maintained:
Yes No N/A	Concentration of lead, arsenic, cadmium, chromium, and nickel in the sewage sludge fed to the sewage sludge incinerator.
Yes No N/A	THC concentrations in the exit gas.
Yes No N/A	Information that indicates NESHAP for beryllium in Subpart C of 40 *CFR* Part 61 are met.
Yes No N/A	Information that indicates NESHAP for mercury in Subpart E of 40 *CFR* Part 61 are met.
Yes No N/A	Combustion temperatures, including maximum combustion temperature.
Yes No N/A	Values for air pollution control device operating parameters.
Yes No N/A	Oxygen concentration.
Yes No N/A	Information used to measure moisture content in the exit gas.
Yes No N/A	Sewage sludge feed rate.

SLUDGE INSPECTION CHECKLIST (Continued)

G. SEWAGE SLUDGE INCINERATION (Continued)

Yes No N/A	Stack height of incinerator.
Yes No N/A	Dispersion factor for the site.
Yes No N/A	Control efficiency for lead, arsenic, cadmium, chromium, and nickel.
Yes No N/A	Risk specific concentration for chromium (if applicable).
Yes No N/A	Calibration and maintenance log for the instruments used to measure THC (or CO), oxygen concentration, moisture content, and combustion temperatures.
Yes No N/A	Are these records maintained for 5 years?
Yes No N/A	11. Have all instances of noncompliance been reported as specified by the permit?
Comments:	

This page intentionally left blank.

11. STORM WATER

Contents Page

A. Background and History 11-1
Regulation Overview (40 CFR 122.26) 11-1

B. Storm Water Discharges Associated with Industrial Activity (Not Including Construction) 11-7
Applicability (Who is Covered) 11-7
Permit Applications for Storm Water Discharges Associated With Industrial Activity 11-9
Storm Water Pollution Prevention Plan Requirements/Office Review 11-11
SWPPP Implementation/In the Field 11-13
Monitoring (including Self-Inspections) 11-14

C. Storm Water Discharges Associated with Construction Activity 11-20
Applicability (Who is Covered) 11-20
Permit Applications for Storm Water Discharges Associated With Construction Activity 11-22
Storm Water Pollution Prevention Plan Requirements 11-23
SWPPP Implementation/In the Field 11-25

D. Storm Water Discharges From Municipal Separate Storm Sewer Systems 11-30
Applicability (Who is Covered) 11-30
Permit Applications for Storm Water Discharges From Municipal Separate Storm Sewer Systems 11-31
Storm Water Management Program (SWMP) Development 11-33
SWMP Implementation/In the Field 11-37

E. References 11-39

List of Tables

11-1 Summary of Storm Water Permitting Regulations 11-3
11-2 NPDES Storm Water Permit Application and Issuance Deadlines 11-4
11-3 Summary of Federal Permit Requirements Under the NPDES Storm Water Program 11-5
11-4 Important SIC Codes for Storm Water Discharges 11-15

List of Figures

11-1 Industrial Categories Associated With Industrial Activity 11-17
11-2 Site-Specific Industrial Storm Water BMPs 11-19
11-3 Site-Specific Construction Storm Water BMPs 11-28

Associated Appendices

P. NPDES Industrial Storm Water Investigation and Case Development Worksheet (Industrial)
Q. Industrial Source Control BMP Questions
R. NPDES Industrial Storm Water Investigation and Case Development Worksheet (Construction)
S. Construction Control Source BMP Questions
T. Notice of Intent (NOI) Form
U. Rain Zones of the United States
V. Typical “C” Coefficients
W. Notice of Termination (NOT) Form
X. No Exposure Certification Form

11. A. Background and History

Regulation Overview (40 CFR 122.26)

In addition to materials in this chapter, inspectors must be familiar with Chapter 1 - "Introduction" & Chapter 2 - "Inspection Procedures."

The 1972 amendments to the Federal Water Pollution Control Act (also known as the Clean Water Act or CWA) prohibited the discharge of any pollutants to navigable waters from a point source unless the discharge was authorized by a National Pollutant Discharge Elimination System (NPDES) permit. At the time of the 1972 amendments to the CWA, sewage treatment plant outfalls and industrial process wastewater were easily identified as point sources responsible for contributing to the degradation of water quality. However, as pollution control measures were instituted, it became evident that more diffuse sources, such as agricultural and storm water runoff, were also contributing to the problem. In response to this concern, the Water Quality Act (WQA) of 1987 added Section 402(p) to the CWA and required the Environmental Protection Agency (EPA) to establish a comprehensive two-phased approach to address storm water discharges.

1987 Amendments to CWA
402(p) Municipal and industrial storm water discharges

(1) General rule - prohibits permits for discharges composed entirely of storm water prior to October 1, 1994 with some exceptions
(2) Exceptions - Identifies five types of storm water discharges that are to be permitted prior to October 1, 1994
(3) Permit requirements - identifies permitting approach for industrial and municipal storm water discharges
(4) Permit application requirements - identifies application requirements for industrial and municipal storm water discharges
(5) Studies - identifies requirement for report to Congress on other sources of storm water discharges
(6) Regulations - requires regulations for permitting other types of storm water discharges to protect water quality

In response to section 402(p)(2) of the Act, Phase I Storm Water regulations were promulgated on November 16, 1990 (55 FR 47990). The regulations specified that the following five storm water discharges must apply for a NPDES permit:

(A) A discharge subject to a NPDES permit before February 4, 1987
(B) A discharge associated with industrial activity (including construction activities >5 acres)
(C) A discharge from a municipal separate storm sewer system serving a population of 250,000 or more (large MS4s)
(D) A discharge from a municipal separate storm sewer system serving a population of 100,000 or more but less than 250,000 (medium MS4s) and
(E) A discharge that an NPDES permitting authority determines to be contributing to a violation of a water quality standard or a significant contributor of pollutants to waters of the United States.

Consistent with Section 402(p)(6) of the Act, EPA Promulgated Phase II Storm Water regulations on December 8, 1999 (64 FR 68722). The Phase II regulations are designed to protect water quality from other types of storm water discharges not already covered by Phase I regulation. Phase II adds regulated small municipal separate storm sewers systems (MS4s)

and small construction (disturbing between 1 and 5 acres) to those entities required to obtain permit coverage for storm water discharges.

Storm water regulations are codified primarily in 40 CFR 122.26 but also are addressed in several other locations in the Federal regulations. A summary of these sections is provided in Table 11-1. ***The storm water regulations apply to discharges both to waters of the United States and to municipal separate storm sewer systems (MS4s). Storm water discharges to sanitary sewer systems or to combined sewer systems are not covered by the storm water regulations.***

EPA's NPDES Storm Water Program focuses on three distinct types of regulated entities: industrial facilities, construction sites, and municipal separate storm sewers systems (MS4s). For clarity, the remainder of this chapter discusses these three types of permitted entities separately. Two tables are attached as additional references: Table 11-2 NPDES Storm Water Permit Application and Issuance Deadlines; and Table 11-3, Summary of the Federal Permit Requirements Under the NPDES Storm Water Program.

Regarding Table 11-2, Section 402(p)(4) of the CWA identifies specific deadlines for the issuance or denial of all storm water permits. However, since EPA was unable to promulgate its regulations by the statutory deadline, the regulations require issuing or denying all storm water permits within one year of the permit application regulatory deadline consistent with Congress' intent. Section 402(p)(4) also specifies that permits shall provide for compliance as expeditiously as practicable, but in no event later than 3 years after the permit issuance date.

Table 11-1
Summary of Storm Water Permitting Regulations

40 CFR 122 - EPA Administered Permit Programs: The National Pollutant Discharge Elimination System

122.1	Purpose and scope
122.21	Application for a permit
122.22	Signatories to permit applications and reports
122.26(a)	Permit requirements
122.26(b)	Definitions
122.26(c)	Application requirements for storm water discharges associated with industrial activity
122.26(d)	Application requirements for large and medium municipal separate storm sewer discharges
122.26(e)	Application deadlines
122.26(f)	Petitions
122.26(g)	Conditional exclusion for "no exposure" of industrial activities and materials to storm water
122.28	General permits
122.30	What are the objectives of the storm water regulations for small MS4s?
122.31	As a Tribe, what is my role under the NPDES storm water program?
122.32	As an operator of a small MS4, am I regulated under the NPDES storm water program?
122.33	If I am an operator of a regulated small MS4, how do I apply for an NPDES permit and when do I have to apply?
122.34	As an operator of a regulated small MS4, what will my NPDES MS4 storm water permit require?
122.35	As an operator of a regulated small MS4, may I share the responsibility to implement the minimum control measures with other entities?
122.36	As an operator of a regulated small MS4, what happens if I don't comply with the application requirements in 122.33 through 122.35?
122.37	Will the small MS4 storm water program regulations at 122.32 through 122.36 and 122.35 of this chapter change in the future?
122.42	Additional conditions applicable to specified categories of NPDES permits
122.44	Establishing limitations, standards, and other permit conditions
122.62	Modifications or revocation and reissuance of permits

40 CFR Part 123 - State Program Requirements

123.25	Requirements for permitting
123.35	As the NPDES permitting authority for regulated small MS4s, what is my role?

40 CFR Part 124 - Procedures for Decision making

124.52	Permits required on a case-by-case basis

Appendix E	Rainfall zones of the United States
Appendix F	Incorporated places with populations greater than 250,000 according to latest decennial census by Bureau of Census
Appendix G	Incorporated places with populations greater than 100,000 and less than 250,000 according to latest decennial census by Bureau of Census
Appendix H	Counties with unincorporated urbanized areas with a population of 250,000 or more according to the latest decennial census by the Bureau of Census
Appendix I	Counties with unincorporated urbanized areas greater than 100,000, but less than 250,000 according to the latest decennial census by the Bureau of Census

Table 11-2

NPDES Storm Water Permit Application and Issuance Deadlines

Type of Application/ Type of Discharge	Permit Application	Permit Coverage Deadline
Industrial Storm Water		
Individual Permit Application		
Existing facilities	October 1, 1992	October 1, 1993
New facilities	180 days prior to commencement of industrial activity	1 year after receipt of complete permit application
New construction facilities	90 days prior to commencement of construction	1 year after receipt of complete permit application
General Permit Application[1]		
Existing facilities	October 1, 1992	As specified in GP
New facilities	90 days prior to commencement of discharge unless specific general permit specifies otherwise	As specified in GP

[1]Facilities applying for general permits must submit notices of intent (NOIs), rather than permit applications.

Table 11-3

Summary of Federal Permit Requirements Under the NPDES Storm Water Program

	Municipal Separate Storm Sewer Systems (MS4s)	**Construction Activity**	**Industrial Activity**
Phase I Requirements (November 16, 1990)	**Medium and Large MS4s** (***122.26***(d)) • Establish adequate legal authority to control discharges to storm sewer, inspect, and enforcement. • Identify major storm water sources and locations of outfalls, and provide characterization data of discharges. • Develop Storm Water Management Program: - Controls for residential and commercial activities - Illicit discharge detection and elimination program - Controls for municipal and industrial activities - Construction site controls • Assess control and perform fiscal analysis • Submit annual report	**Category (x) Construction Activity (5+Acres)** CGP: • Storm Water Pollution Prevention Plan (SWPPP) - Site description - Description of BMPs for erosion and sediment, post-construction storm water management, and other controls - Self-evaluation and recordkeeping	**Ten Categories of Industrial Activity (Categories (i)-(ix), (xi))** MSGP: • SWPPP - Site evaluation - Description of appropriate storm water management BMPs - Self-evaluation, monitoring, recordkeeping, and, in some circumstances, reporting • If discharging into a medium or large MS4, notify the MS4 operator

Table 11-3

Summary of Federal Permit Requirements Under the NPDES Storm Water Program

(Continued)

	Regulated Small MS4	**Small Construction Activity (≥1 and <5 acres)**	**Industrial**
Phase II Requirements (December 8, 1999)	• Storm Water Management Program: - Public education and outreach - Public participation efforts - Illicit discharge detection and elimination program - Construction runoff control program for construction activity disturbing 1 acre or greater - Post-construction runoff control program for construction activity disturbing 1 acre or greater - Good housekeeping/ pollution prevention for municipal operations • Conduct assessment of identified BMPs and measurable goals for each minimum control measure • Submit periodic program assessment reports	• Similar to category (x) Construction Activity requirements above • Small construction waivers requirement	• Conditional no exposure waiver

11. B. Storm Water Discharges Associated with Industrial Activity (Not Including Construction)

Applicability (Who is Covered)

The storm water regulations identify 11 categories of facilities that are associated with industrial activity (40 *CFR* 122.26(b)(14)(i)-(xi)). EPA defines these categories of industrial activity using a combination of standard industrial classification codes and facility activities. A description of these 11 categories is provided in Figure 11-1. One of the 11 categories, category (x), construction activity, is discussed separately in Section 11.C because of the significant difference in site activity and requirements from the other 10 industrial categories.

EPA estimates that nationwide more than 150,000 industrial facilities are required to obtain permit coverage for storm water discharges associated with industrial activity.

The NPDES regulations, at 40 CFR 122.26(b)(14) define "storm water discharges associated with industrial activity." Specifically, the phrase means "the discharge from any one conveyance which is used for collecting and conveying storm water and which is directly related to manufacturing, processing, or raw materials storage areas at an industrial plant." For the 10 categories of industries identified in 40 CFR 122.26(b)(14)(i)-(ix), and (xi), the term includes, but is not limited to, storm water discharges from the following:

- Industrial plant yards
- Immediate access roads and rail lines used or traveled by carriers of raw materials, manufactured products, waste material, or by-products used or created by the facility
- Material handling sites
- Refuse sites
- Sites used to apply or dispose of process wastewaters (as defined at 40 *CFR* Part 401)
- Sites used for storage and maintenance of material handling equipment
- Sites used for residual treatment, storage, or disposal

Material handling activities include storage loading and unloading, transportation, or conveyance of any raw material, intermediate product, final product, by-product, or waste product. The term excludes areas located on plant lands separate from the plant's industrial activities such as the office buildings and accompanying parking lots as long as the drainage from the excluded areas is not mixed with storm water drained from any of the manufacturing, processing, or raw material storage areas.

- Shipping and receiving areas
- Manufacturing buildings
- Storage areas (including tank farms) for raw materials and intermediate and finished products
- Areas where industrial activity has taken place in the past and significant materials remain and are exposed to storm water.

One of the first questions that must be answered by the inspector when evaluating the applicability of the storm water permitting regulations to a specific facility is whether the facility performs any industrial activities subject to the storm water permitting requirements. Often, this decision hinges upon the facility's primary SIC code, which is based on the primary activity occurring at the site. (See Table 11-4 for a list of primary SIC codes covered by the storm water permitting requirements.) Where multiple activities are conducted at a site, with each activity having a distinct SIC code, EPA recommends using the value of receipts or revenues with the activity generating the most revenue or employing the most people being the primary activity of the facility. If the SIC code for this primary activity is identified in 40 *CFR* 122.26(b)(14), then the facility is subject to the storm water permitting requirements. If, however, the facility's primary activity is not included in 40 *CFR* 122.26(b)(14), the facility is not subject to the permitting requirements even if the facility conducts secondary activities that are identified therein. The approach is different for industrial sectors identified with narrative rather then SIC codes. In these instances, any activity performed that meets the narrative description is required to obtain permit coverage for those specific activities. For more information on compliance assistance for transportation, construction, auto recyclers, etc. go to www.assistancecenters.net.

Exemption for Mining or Oil and Gas Facilities

Storm water runoff from oil and gas exploration, production, processing, transmission, and treatment operations and mining operations are exempt from CWA permitting requirements provided that the runoff is not contaminated with, or does not come into contact with, any overburden, raw material, intermediate products, finished product, byproduct, or waste products located on the site of such operations.

Federal regulations at 40 CFR §122.26(c)(1)(iii) specify that storm water discharges from oil and gas exploration, production, processing, or treatment operations, or transmission facilities do need permit coverage if the facility has had a discharge of storm water (A) resulting in the discharge of a reportable quantity for which notification is or was required pursuant to 40 CFR 117.21, 40 CFR 302.6 or 40 CFR 110.6 or (B) that contributes to a violation of a water quality standard.

Consistent with 40 CFR §122.26(c)(1)(iv), a discharge composed entirely of storm water from a mining operation is not required to submit a permit application unless the discharge has come into contact with any overburden, raw material, intermediate products, finished product, byproduct, or waste products located on the site of such operations.

Note that the CWA exemption for oil, gas, and mining operations does not apply to construction activities related to those operations. Currently, construction activities at oil, gas and mining

operations which exceed five acres, or are part of a larger common plan of development, are required to obtain permit coverage, either under a state or federal construction permit. Effective March 10, 2005, construction activities at oil, gas and mining operations which exceed one acre will be required to obtain permit coverage. An informational brochure is available on EPA's Region VI website on Stormwater Best Management Practices (BMP) titled "*Your Oil and Gas Construction Activities May Need Coverage Under the Clean Water Act's Stormwater Program!*"

> **No exposure** means all industrial materials and activities are protected by a storm resistant shelter to prevent exposure to rain, snow, snowmelt, and/or runoff. Industrial materials or activities include, but are not limited to, material handling equipment or activities, industrial machinery, raw materials, intermediate products, by-products, final products, or waste products.

Conditional No Exposure Exclusion

The Phase II Conditional No Exposure Exclusion significantly expands the scope of the original no exposure eligibility requirements. Under the conditional no exposure exclusion, operators of industrial facilities in any of the 10 categories of "storm water discharges associated with industrial activity," have the opportunity to certify to a condition of "no exposure" if their industrial materials and operation activities are not exposed to storm water. As long as the condition of "no exposure" exists at a certified facility, the operator is excluded from NPDES industrial storm water permit requirements. The conditional no exposure exclusion replaces the previous "light industry" no exposure exemption included under the Phase I Storm Water Program.

Permit Applications for Storm Water Discharges Associated With Industrial Activity

Industrial facilities have two permit options for storm water discharges - coverage under (1) a general permit or (2) an individual permit. Most industrial facilities have permit coverage under a general permit because it is the most efficient permit option for permitting large number of facilities with similar discharge characteristics. Where EPA is the NPDES permitting authority, the Multi-Sector General Permit (MSGP), most recently issued on October 30, 2000 (65 FR 64746), is the general permit available to facility operators. The MSGP covers 30 industrial sectors. Standard Industrial Classification (SIC) codes and narrative descriptions identify the industrial facilities within each of the 30 sectors. The EPA MSGP is available for use in areas only where EPA is the permitting authority. Similar general permits may be available in NPDES authorized states. Information related to general and individual permits is presented below.

General Permit/Notice of Intent

To apply for permit coverage under the MSGP, a facility operator must complete and submit to the appropriate NPDES permitting authority a Notice of Intent (NOI) form. The NOI requests a variety of basic facility information, including latitude/longitude of the facility, and information related to the Endangered Species Act and the National Historic Preservation Act. The deadline for submission of an NOI requesting coverage under the MSGP-2000 was January 29, 2001 for existing sources. (The MSGP-2000 preamble and permit contain conflicting information regarding the deadline. EPA published a technical correction that contains the correct deadline of January 29, 2001 [66 FR 1675] January 9, 2001.)

Under EPA's current MSGP, new facilities and those facilities that change ownership or operators must submit an NOI at least 48 hours prior to commencement of the industrial activity at the site or change in ownership/operator.

To discontinue permit coverage, a facility operator must complete and submit to the appropriate NPDES permitting authority a Notice of Termination (NOT) form. The most recent version of the NOT form is available in Addendum E of the Federal Register containing the MSGP-2000.

Individual Permits

There are certain circumstances where a general permit is either not available or not applicable to a specific facility. Examples of when an individual permit is the only option include:

- The NPDES permitting authority requires a facility operator to apply for individual permit coverage.
- The facility operator is unable to certify eligibility with the conditions of the general permit.

In these situations, a facility operator must obtain coverage under an individual permit that the NPDES permitting authority will develop with requirements specific to that facility.

Establishing Eligibility

Endangered Species Act

EPA's NOI requires the facility to certify that the industrial activity will not impact endangered or threatened species or designated critical habitats protected under the Endangered Species Act (ESA). This certification is unique to EPA's NOI and is not a requirement of most NPDES-delegated States' NOIs. All dischargers applying for coverage must provide application on the NOI form including: (1) whether there are listed species in proximity to the storm water or allowable non-storm water discharges or discharge-related activity; (2) under which option of the MSGP they claim eligibility for permit coverage (outlined in Addendum A of the Final Reissuance of National Pollutant Discharge Elimination System (NPDES) Storm Water Multi-Sector General Permit for Industrial Activities dated October 30, 2000), and (3) certification that their storm water and allowable non-storm water discharges and discharge related activities are not likely to jeopardize listed species, or certification that they are otherwise eligible for coverage due to a previous authorization under the ESA. Permittees should consult with state Fish and Wildlife Service (FWS) and National Marine Fisheries Service (NMFS) offices to make these determinations of eligibility.

"***Discharge-related activities***" are defined to include activities which cause, contribute to or result in storm water and allowable non-storm water point source discharges, and measures such as the siting, construction and operation of BMPs to control, reduce or prevent pollution in the discharges. Discharge-related activities are included for compliance with ESA requirements to consider the effects of activities which are related to the activity which is permitted, *i.e.*, the storm water and non-storm water discharges.

National Historic Preservation Act

The National Historic Preservation Act (NHPA) requires Federal agencies to take into account the effects of Federal undertakings, including NPDES general permits. An applicant is eligible for permit coverage only if: (1) the applicant's storm water discharges and BMPs to control storm water runoff do not affect a historic property, or (2) the applicant has obtained, and is in

compliance with a written agreement between the applicant and the State Historic Preservation Officer (SHPO) or Tribal Historic Preservation Officers (THPO) that outlines all measures to be taken by the applicant to mitigate or prevent adverse effects to the historic property. NHPA guidance and a list of SHPO and THPO addresses are included in Addendum B of the Final Reissuance of National Pollutant Discharge Elimination System (NPDES) Storm Water Multi-Sector General Permit for Industrial Activities dated October 30, 2000. An electronic listing of the "National Register of Historic Places," as maintained by the National Park Service, can be accessed at http://www.nps.gov.

Storm Water Pollution Prevention Plan Requirements/Office Review

The operator (or applicant) must prepare a Storm Water Pollution Prevention Plan (SWPPP) for the facility before submitting a Notice of Intent for permit coverage. The SWPPP must be signed by a responsible corporate official such as a president, vice president, or general partner as identified in the MSGP. This SWPPP is to be kept at the facility at all times (or other local location accessible to the EPA, a State, Tribal or Territorial agency with jurisdiction over water quality protection; local government officials; or the operator of a MS4 receiving discharges from the site) and must be submitted for review when requested by EPA or by the operator of the municipal separate storm sewer system when the facility discharges to a municipal separate storm sewer.

For large or complex facilities, the inspector should request a copy of the SWPPP prior to inspection to be more familiar with the facility during the inspection. Otherwise, the inspector will obtain a copy of and review the SWPPP or at least parts of the SWPPP during the inspection. At a minimum, the inspector should review the site map prior to conducting the field inspection to understand the site and the existing/planned storm water controls. Depending on the time available for the inspection and the size of the SWPPP, the inspector may need to complete the remaining portion of the SWPPP review only when he or she returns to the office.

In reviewing the SWPPP, the inspector must evaluate whether it contains all of the required elements specified in the permit (e.g., the MSGP, the State General Permit in NPDES authorized States, or an individual permit issued to the facility). Typically, the MSGP requires that the SWPPP identify potential sources of pollution which may be reasonably expected to affect the quality of storm water discharges and describe and ensure implementation of practices used by the facility to reduce the pollutants in its storm water discharges. (Reviewing the SWPPP implementation is covered in the next section.) The MSGP-2000 lists the following specific items that must be included in the SWPPP:

- ***Pollution Prevention Team*** - identifying individuals responsible for developing, implementing, maintaining, and revising the SWPPP
- ***Description of industrial activities*** at the facility
- ***General location map*** depicting the facility and location of receiving waters
- ***Legible site map*** indicating:
  - direction of storm water flow
  - location of existing structural Best Management Practices (BMPs)
  - location of all surface water bodies
  - location of potential pollutant sources and where significant materials are exposed to precipitation

- location where major spills or leaks have occurred
- locations of activities exposed to precipitation, including fueling stations, vehicle and equipment maintenance and/or cleaning areas, etc.
- locations of storm water outfalls and outline of areas draining to such outfalls
- location and description of non-storm water discharges
- location of activities exposed to precipitation to include processing and storage areas, access roads, etc.
- location and source of runoff from adjacent property containing significant quantities of pollutants of concern.

- ***Receiving waters and wetlands***
- ***Summary of potential pollutant sources***
- ***Areas of spills and leaks during prior three-year period***
- ***Summary of sampling data***
- ***Storm water controls*** to include a description of existing and planned BMPs.

These items are detailed in Section 4.2 of the MSGP-2000, which covers the general requirements for a SWPPP. In addition, the MSGP contains sector-specific SWPPP requirements which are found in Section 6 of the MSGP. The NPDES Industrial Storm Water Worksheet found in Appendix P also lists these items. Finally, a State General Permit may contain additional items. The inspector must have the applicable State general permit for storm water discharges associated with industrial activities.

NOTE: As defined in 40 CFR 122.26(b)(12), significant materials include, but are not limited to: raw materials; fuels; materials such as solvents, detergents, and plastic pellets; finished materials such as metallic products; raw materials used in food processing or production; hazardous substances designated under CFR Section 101(14) of the Comprehensive Environmental Response, Compensation, and Liability Act (CERCLA); any chemical the facility is required to report pursuant to Section 313 of Title III of Superfund Amendments and Reauthorization Act (SARA); fertilizers; pesticides; and waste products such as ashes, slag, and sludge that have the potential to be released with storm water discharges.

The SWPPP may incorporate or may be incorporated into other plans that the facility prepared for other permits or programs including Spill Prevention Control and Countermeasure (SPCC) Plans, or BMP Programs.

Additional Requirements for EPCRA 313 Facilities

The MSGP also includes special requirements for facilities subject to reporting requirements under Emergency Planning and Community Right-to-Know (EPCRA) (also known as Title III of the Superfund Amendments and Reauthorization Act (SARA) of 1986). Potential pollutant sources for which the facility has reporting requirements under EPCRA 313 must be identified in the summary of potential pollutant sources in the facility's SWPPP.

SWPPP Implementation/In the Field

In the field, the inspector should verify that the map and description of potential pollutant sources in the SWPPP reflect current conditions. In addition, the inspector should verify that measures and controls described in the SWPPP, are being implemented as described in the SWPPP. These measures and controls will include items such as:

- Good housekeeping or upkeep of industrial areas exposed to storm water
- Preventive maintenance of storm water controls and other facility equipment
- Spill prevention and response procedures to minimize the potential for and the impact of spills
- Inspections of areas where industrial materials or activities are exposed to storm water, including evaluation of existing BMPs
- Employee training on pollution prevention measures and controls and recordkeeping (described in detail below).

The MSGP may also require that facilities:

- Identify areas with a high potential for erosion and the stabilization measures or structural controls to be used to limit erosion in these areas
- Implement traditional storm water management measures (e.g., oil/water separators, vegetative swales, detention ponds) where they are appropriate for the site.

Implementation of SWPPPs requires facilities to implement BMPs and train employees on how to carry out the goals of the SWPPP. The inspector should evaluate any implementation schedules developed by the facility for carrying out the SWPPP (e.g., deadlines for putting improved housekeeping measures into practice). The inspector should also determine whether appropriate individuals have been assigned to implement the specific aspects of the SWPPP and whether these individuals are aware of the requirements of that designation. If the SWPPP requires installation of structural controls, the inspector should verify that the controls are in place and in good working order or that the facility is on an appropriate schedule for construction of the structural control measures. The inspector should also ensure that management approves of the implementation schedule and strategy and is aware of the SWPPP process.

In addition, employee training on the components and goals of the Storm Water Pollution Prevention Plan must be performed at all levels of responsibility. The inspector should verify that there are training programs and that the training focuses on spill prevention and response, good housekeeping practices, materials management, and also, how to do inspections and monitoring.
Specific inspector questions, that may be appropriate at a given industrial site, are contained in the NPDES Industrial Storm Water Worksheet found in Appendix P. Site-specific Best Management Practices (BMPs) for industrial activities are summarized in Figure 11-2.

Monitoring (including Self-Inspections)

Self-Inspections

The SWPPP must have provisions for two tiers of inspections to be performed by the facility. The first tier consists of quarterly visual examination of storm water discharges, looking for indications of storm water pollutants in the discharge. Quarterly visual monitoring is intended to determine the need for maintenance, good housekeeping, or other BMPs. The second tier of inspection is the comprehensive site evaluation, which requires qualified personnel to:

- Look for evidence of pollutants entering the drainage system
- Evaluate the performance of pollution prevention measures
- Identify areas where the SWPPP should be revised to reduce the discharge of pollutants
- Document both the routine inspections and the annual site evaluation in a report.

The compliance site evaluation can be done less frequently than the routine inspection (but not less than once per year). The inspector should verify that documentation of both the routine inspections and the comprehensive site compliance evaluation is included in the SWPPP.

Monitoring Requirements

There are several distinct categories of monitoring requirements and numeric effluent limitations that the facility may be subject to under the MSGP-2000: (1) monitoring for numeric limitation, (2) benchmark monitoring, (3) biannual monitoring for metal mining facilities, and (4) specific monitoring by a State, Tribe, or Territory. The monitoring requirements and numeric limitations applicable to the facility depend on a number of factors including (1) the types of industrial activities generating storm water runoff from the facility, and (2) the State or Tribe where the facility is located. Depending on the facility's sector (identified in MSGP Section 1.2.1), different monitoring requirements and numeric limitations apply. The MSGP-2000 established monitoring requirements only for certain classes of industrial sites. These requirements are based on analysis of the types of pollutants potentially discharged from the different industrial sectors. State NPDES permitting authorities are authorized to include more stringent monitoring conditions; therefore, the inspector should review the facility's permit to identify the site-specific requirements.

For specific monitoring requirements, the inspector should review EPA's most current MSGP (where applicable), the State NPDES permit, or the facility-specific individual permit. The permit will contain specific conditions as to the sample type, location, frequency, as well as the specific parameters that must be analyzed. If it is necessary for the inspector to collect samples, the inspector should refer to Chapter Five of this manual and to EPA's *Guidance Manual for the Monitoring and Reporting Requirements of the NPDES Storm Water Multi-Sector General Permit*, EPA 833-B-99-001, January 1999 for specific details on sampling and analyses.

Table 11-4

SIC Codes Regulated for Storm Water Discharges

SIC	Description
MINING	
10	Metal mining
12	Coal mining
13	Oil and gas extraction
14	Mining and quarrying or nonmetallic minerals, except fuels
MANUFACTURING	
20	Food and kindred products
21	Tobacco products
22	Textile mill products
23	Apparel and other finished products made from fabrics and similar materials
24	Lumber and wood products, except furniture
2434	Wood kitchen cabinets
25	Furniture and fixtures
26	Paper and allied products
265	Paperboard containers and boxes
267	Converted paper and paperboard products, except containers and boxes
27	Printing, publishing, and allied industries
28	Chemicals and allied products
283	Drugs
285	Paints, varnishes, lacquers, enamels, and allied products
29	Petroleum refining and related industries
30	Rubber and miscellaneous plastic products
31	Leather and leather products
311	Leather tanning and finishing
32	Stone, clay, glass, and concrete products
323	Glass products, made of purchased glass
33	Primary metals industry
34	Fabricated metal products, except machinery and transportation equipment
3441	Fabricated structural metal
35	Industrial and commercial machinery and computer equipment
36	Electronic and other electrical equipment and components, except computer equipment
37	Transportation equipment
373	Ship and boat building and repairing
38	Measuring, analyzing, and controlling instruments; photographic, medical and optical goods; watches and clocks
39	Miscellaneous manufacturing industries
TRANSPORTATION, COMMUNICATIONS, ETC.	
40	Railroad transportation
41	Local and suburban transit and interurban highway passenger transportation
42	Motor freight transportation and warehousing
4221	Farm product warehousing and storage
4222	Refrigerated warehousing and storage
4225	General warehousing and storage
43	United States Postal Service
44	Water transportation
45	Transportation by air
WHOLESALE TRADE	
50	Wholesale trade - durable goods
5015	Motor vehicle parts, used
5093	Scrap and waste material
51	Wholesale trade - nondurable goods
5171	Petroleum bulk stations and terminals

Figure 11-1

Industrial Categories Associated With Industrial Activity

The eleven categories engaging in industrial activity are described below. Descriptions of Standard Industrial Classification [SIC] codes applicable to the storm water regulations are provided in Table 11-4.

(i) Facilities subject to storm water effluent limitations guidelines, new source performance standards, or toxic pollutant effluent standards under 40 CFR subchapter N (except facilities with toxic pollutant effluent standards which are exempted under category (xi) below;

(ii) Facilities classified as SIC 24 (except 2434), 26 (except 265 and 267), 28 (except 283), 29, 311, 32 (except 323), 33, 3441, and 373;

(iii) Facilities classified as SIC 10 through 14 (mineral industry) including active or inactive mining operations (except for areas of coal mining operations no longer meeting the definition of a reclamation area under 40 CFR 434.11(l) because the performance bond issued to the facility by the appropriate SMCRA authority has been released, or except for areas of non-coal mining operations which have been released from applicable State or Federal reclamation requirements after December 17, 1990) and oil and gas exploration, production, processing, or treatment operations, or transmission facilities that discharge storm water contaminated by contact with or that has come into contact with, any overburden, raw material, intermediate products, finished products, byproducts or waste products located on the site of such operations; (inactive mining operations are mining sites that are not being actively mined, but which have an identifiable owner/operator; inactive mining sites do not include sites where mining claims are being maintained prior to disturbances associated with the extraction, beneficiation, or processing of mined materials, nor sites where minimal activities are undertaken for the sole purpose of maintaining a mineral claim);

(iv) Hazardous waste treatment, storage, or disposal facilities, including those that are operating under interim status or a permit under subtitle C of RCRA;

(v) Landfills, land application sites, and open dumps that receive or have received any industrial wastes (waste that is received from any of the facilities described under this subsection) including those that are subject to regulation under subtitle D of RCRA;

(vi) Facilities involved in the recycling of materials, including metal scrapyards, battery reclaimers, salvage yards, and automobile junkyards, including but not limited to those classified as SIC 5015 and 5093;

(vii) Steam electric power generating facilities, including coal handling sites;

Figure 11-1

Industrial Categories Associated With Industrial Activity

(Continued)

(viii) Transportation facilities classified as SIC 40, 41, 42 (except 4221-25), 43, 44, 45, and 5171 which have vehicle maintenance shops, equipment cleaning operations, or airport deicing operations. Only those portions of the facility that are either involved in vehicle maintenance (including vehicle rehabilitation, mechanical repairs, painting, fueling, and lubrication), equipment cleaning operations, airport deicing operations, or which are otherwise identified under paragraphs (i)-(vii) or (ix)-(xi) of this section are associated with industrial activity;

(ix) Treatment works treating domestic sewage or any other sewage sludge or wastewater treatment device or system, used in the storage, treatment, recycling, and reclamation of municipal or domestic sewage, including land dedicated to the disposal of sewage sludge that are located within the confines of the facility, with a design flow of 1.0 million gallons a day (mgd) or more, or required to have an approved pretreatment program under 40 CFR Part 403. Not included are farm lands, domestic gardens or lands used for sludge management where sludge is beneficially reused and which are not physically located in the confines of the facility, or areas that are in compliance with section 405 of the CWA;

(x) Construction activity including clearing, grading and excavation activities except: operations that result in the disturbance of less than five acres of total land area which are not part of a larger common plan of development or sale;

(xi) Facilities under SIC 20, 21, 22, 23, 2434, 25, 265, 267, 27, 283, 285, 30, 31 (except 311), 323, 34 (except 3441), 35, 36, 37 (except 373), 38, 39, 4221-4225, (and which are not otherwise included within categories (i)-(x).

Figure 11-2

Site-Specific Industrial Storm Water BMPs

Flow Diversion Practices: Flow diversion is practiced to channel storm water away from industrial activities to prevent storm water contact with industrial pollutants. Additionally, flow diversion may be used to channel polluted storm water directly to a treatment facility.

Flow diversion practices include storm water conveyances (e.g., channels, gutters, drains, and sewers), diversion dikes, and graded areas and pavement.

Exposure Minimization Practices: Exposure minimization is practiced to eliminate or minimize the contact of storm water with industrial activities and its pollutants. If contact of storm water with pollutants is minimized, the costs of collecting and treating and storm water and the environmental releases that occur will be reduced.

Exposure minimization practices include containment diking, curbing, drip pans, collection basins, sumps, covering, vehicle positioning, and loading and unloading by air pressure or vacuum.

Mitigative Practices: Mitigation is practiced to clean up or recover a substance (i.e., potential pollutant) before it comes in contact with storm water. Mitigation is a second step after pollution prevention.

Mitigative practices include sweeping, shoveling, excavation practices, vacuum and pump systems, sorbents, and gelling agents.

Other Preventative Practices: Other preventative practices can be taken to limit/prevent the exposure of storm water to industrial activities. These practices may be either structural or procedural measures taken to reduce/eliminate exposure.

Other preventative practices include preventative monitoring practices, dust control (land disturbances and demolition areas), dust control (industrial activities), signs and labels, security, area control procedures, and vehicle washing.

Sediment and Erosion Prevention Practices: Sediment and erosion prevention can be accomplished using seven general practices: vegetate the site, minimize soil exposure to storm water, keep runoff from disturbed areas, stabilize disturbed soils, slow down runoff, provide drainage ways for runoff, and remove sediment from the runoff before it leaves the site.

Sediment and erosion prevention practices include vegetative practices, structural erosion prevention, and sediment control practices.

Infiltration Practices: Infiltration practices are measures that increase the infiltration of storm water runoff into the ground through the use of very porous soils. Infiltration practices may also reduce the velocity of storm water, thereby minimizing erosion potential of the runoff.

Infiltration practices include vegetated filter strips, grassed swales, level spreaders, infiltration trenches, and porous pavements/concrete grids and modular pavements.

11. C. Storm Water Discharges Associated with Construction Activity

Applicability (Who is Covered)

Construction activity plays a major role in the degradation of water quality. Construction activities are a major contributor of sediment discharges to our rivers, streams, and wetlands. In the 1998 National Water Quality Inventory, States reported that siltation is the largest cause of impaired water quality in rivers and streams and the third largest cause of impairment in lakes. Sediment-laden discharges can result in aquatic habitat destruction, and detrimental changes to hydrologic patterns, including increased natural stream flows and excessive flooding. Total suspended solids (TSS) concentrations from uncontrolled construction sites have been found to be more than 150 times greater than the concentration from undeveloped land.

Large Construction Activity

As mentioned earlier, the Phase I Rule identifies eleven categories of industrial activity in the definition of "storm water discharge associated with industrial activity" that must obtain an NPDES storm water discharge permit (see Section 11.B). Category (x) of this definition includes construction activity (including clearing, grading, and excavation) that results in a total land disturbance of 5 acres or greater. Disturbance of less than 5 acres are also regulated under category (x) if they are part of a "larger common plan of development of sale" with a planned disturbance of 5 acres or greater. Phase I construction activity is commonly referred to as "large" construction activity. The Phase I rule requires all operators of large construction activity to obtain a NPDES storm water discharge permit before discharging storm water runoff to a municipal separate storm sewer system or waters of the United States, unless covered by the United States Army Corps of Engineers 404 permit.

> **Construction activities** can include road building, construction of residential houses, office buildings, industrial sites, or demolition.
>
> **Land Disturbance** means exposed soil due to clearing, grading, or excavation activities.
>
> **Larger common plan of development or sale** describes a situation in which multiple construction activities occurs on a contiguous area.
>
> **An operator** is the person or persons that has either operational control of construction project plans and specifications, or day-to-day operational control of activities necessary to ensure compliance with storm water permit conditions.

Small Construction Activity

In 1992, the Court of Appeals for the Ninth Circuit remanded for further proceedings the portion of EPA's Phase I storm water regulation related to category (x) construction activity (*NRDC v. EPA,* 966 F.2d) (9thCir. 1992). EPA responded to the court's decision by designating under Phase II storm water discharges from construction site activities that ultimately will result in a

land disturbance of equal to or greater than 1 and less than 5 acres as "storm water discharges associated with small construction activity" (see 40 *CFR* 122.26(b)(15)). The Phase II rule specifies all operators of small construction must be covered under an NPDES storm water discharge permit by March 10, 2003 before discharging storm water runoff to a municipal separate storm sewer system or waters of the United States after that date.

Construction activities disturbing less than 1 acre are also included in Phase II of the NPDES storm water program if they are part of a larger common plan of development or sale with a planned disturbance of equal to or greater than 1 acre and less than 5 acres, or if they are designated by the NPDES permitting authority. The NPDES permitting authority or EPA may designate construction activities disturbing less than 1 acre based on potential for contribution to a violation of a water quality standard or for significant contribution of pollutants to waters of the United States.

Small Construction Waivers

Small construction activity does not require permit coverage where the construction operator can certify one of two waivers. Small construction activities disturbing less than 1 acre that are designated by the permitting authority are not eligible for these waivers. Under the Phase II Rule, NPDES permitting authorities have the option of providing a waiver from Phase II coverage and requirements to operators of small construction activity who certify to one of two conditions:

(1) Low predicted rainfall potential (i.e., activity occurs during a negligible rainfall period), where the rainfall erosivity factor ("R" in the Revised Universal Soil Loss Equation [RUSLE]) would be less than 5 during the period of construction activities; or

(2) A determination that storm water controls are not necessary based on either:

(A) A "total maximum daily load" (TMDL) that address the pollutant(s) of concern[1] for construction activities; or

(B) An equivalent analysis for non-impaired waters that determines allocations are not needed to protect water quality based on consideration of instream concentrations, expected growth in pollutant concentrations from all sources, and a margin of safety.

In order to qualify for the Rainfall Erosivity Factor Waiver, the construction site operator must determine the value of the rainfall erosivity factor - R factor in the RUSLE and then certify to the permitting authority that the factor is less than 5 during the period of construction. A construction site operator will need site-specific data to calculate the values for rainfall erosivity using RUSLE. Calculations may also be made online by going to that waiver section at: http://www.epa.gov/npdes/stormwater/cgp.cfm.

In order to qualify for the Water Quality Waiver, the operator of the construction site would need to certify that the facility's construction activity will take place, and the storm water discharges

[1]Pollutants of concern include sediment or a parameter that addresses sediment (such as total suspended solids, turbidity, or siltation) and any other pollutant that has been identified as a cause of impairment of a receiving waterbody.

will occur, within the area covered by the TMDLs or equivalent analysis. A certification form is provided by EPA and would likely be provided by the NPDES permitting authority.

Inspector should verify that the construction project qualifies for a waiver.

Permit Applications for Storm Water Discharges Associated With Construction Activity

Operators of both small and large construction activities must obtain coverage under a NPDES construction storm water permit. Where EPA is the NPDES permitting authority, the Construction General Permits (CGP) are the only permit option available. In areas where EPA is not the NPDES permitting authority, other types of construction storm water permits may be required, so it is important to check with the appropriate NPDES permitting authority. Many State NPDES permitting authorities have issued general permits for construction activities. State construction general permits will also be referred to as CGPs through-out the chapter. See www.cicacenter.org/swp2.html for list of state General Permits.

General Permit/Notice of Intent

As stated above, the CGP is the only general permit available to operators of large construction activities in areas where EPA is the NPDES permitting authority. The CGP for areas where EPA is the permitting authority is published in the *Federal Register*. Much like the industrial facilities that apply for general permits, operators of construction sites that apply for permit coverage under the CGP are required to complete, certify, and submit to the appropriate NPDES permitting authority a Notice of Intent (NOI) Form. The NOI requests a variety of information, including information related to the Endangered Species Act (similar to what is described in the Permit Applications for Storm Water Discharges Associated with Industrial Activity section of this chapter). In order to discontinue permit coverage, an operator of a construction activity must complete and submit to the appropriate NPDES permitting authority a Notice of Termination (NOT) Form upon satisfying the appropriate permit conditions described in the CGP. This permit presents operators with all requirements up front, allowing facility operators to become familiar with, and prepare for, activities such as storm water pollution prevention plan implementation and regular inspections, prior to applying for permit coverage. The key component of the CGP is the development and implementation of a construction storm water pollution prevention plan (SWPPP). For sites with multiple operators, EPA encourages these operators to develop one comprehensive SWPPP with specific requirements for each operator identified. Some of the other requirements include conducting regular inspections and reporting releases of reportable quantities of hazardous substances. Operators must also comply with local, State, or Tribal construction runoff control programs.

NOIs must be submitted in the time frame specified in the applicable general permit (e.g., at least 7 days prior to commencement of construction.) Electronic filing of NOI's (E-NOI) is now available for non-authorized states see http://cfpub.epa.gov/npdes/stormwater/enoi.cfm.

EPA's regulations allow permitting authorities to authorize discharges under general permit for small construction sites without submitting an NOI where the permitting authority finds that NOIs would be inappropriate. While EPA does not currently implement this allowance, some states have opted to regulate small construction that way (i.e. no NOI required).

Individual Permit (Phase II and Phase I)

In the event that an operator of a small construction activity chooses to apply for an individual permit, or if the NPDES permitting authorities denies coverage under general permits and requires the operator to submit an individual NPDES permit application (based on information such as water quality data), or if any of the discharges of storm water associated with small construction activity identified in 40 CFR 122.26(b)(15) that are not authorized by the general permit, the operator is subject to the individual application requirements found at *CFR*122.26(c)(1)(ii).

Establishing Eligibility

Endangered Species Act

EPA's NOI requires certification that the construction activity will not impact endangered or threatened species protected under the Endangered Species Act (ESA). As mentioned above, this NPDES certification requirement is unique to EPA's NOI. All dischargers applying for coverage must include in the application information on the NOI form: (1) whether listed species are in proximity to the storm water or allowable non-storm water discharges or discharge-related activity; (2) under which option of the CGP they claim eligibility for permit coverage, and (3) certification that their storm water and allowable non-storm water discharges and discharge related activities are not likely to jeopardize listed species, or are otherwise eligible for coverage due to a previous authorization under the ESA. The permittee should consult with applicable state Fish and Wildlife service and National Marine Fisheries Service offices to make these determinations of eligibility.

Storm Water Pollution Prevention Plan Requirements

The Storm Water Pollution Prevention Plan as required in the CGP must be prepared prior to submission of the NOI. The construction project must comply with the provisions of the SWPPP throughout the construction period and must be signed by a responsible official such as the president, vice president, or general partner. The construction facility must keep the SWPPP on-site throughout the entire construction period. The SWPPP must be submitted for review only when requested by EPA, although some permitting authorities may require submission at the SWPPP along with the NOI.

For large or complex construction sites the inspector should request a copy of the SWPPP prior to inspection to ensure familiarity with the site during the inspection. This may not always be possible where we want to ensure there is no advance notice of an inspection. Otherwise, the inspector will obtain a copy of and review the SWPPP or at least parts of the SWPPP during the inspection. At a minimum, the inspector will need to review the site map prior to conducting the field inspection to understand the site and the existing/planned storm water controls. Depending on the time available for the inspection and the size of the SWPPP, the inspector may need to complete the remaining portion of the SWPPP review when he or she return to the office.

In reviewing the SWPPP, the inspector must evaluate if it contains all of the required elements specified in the permit (either the most current EPA CGP, the applicable State permit in NPDES-authorized States, or an individual permit issued to the site). The CGP requires that the SWPPP identify potential sources of pollution which may reasonably be expected to affect the quality of storm water discharges and describe and ensure implementation of practices which the operator will use to reduce the pollutants in its storm water discharges. (Reviewing the SWPPP implementation is covered in the next section.) The following items are required typically in the SWPPP:

- A description of the nature of the construction activity
- A sequence (schedule) of major construction activity
- An estimate of the total area of the site and of the area to be disturbed
- Any existing data on the quality of storm water discharge from the site
- The name of the receiving water
- Any information on the type of soils at the site
- A site map indicating drainage patterns and slopes after grading activities are complete, areas of soil disturbance, areas which will not be disturbed, the location of stabilization measures and structural and non-structural controls, locations of offsite material, waste, borrow, equipment storage areas, and surface waters at the discharge outfalls
- Location and description of any discharge associated with industrial activity other than construction
- Copy of permit requirements
- Information on listed endangered or threatened species or critical habitat in proximity to site
- Measures and controls to prevent or minimize pollution of storm water.

Typically, measures and controls must include the following three (3) types:

(1) Erosion and Sediment Controls

Construction phase erosion and sediment controls should be designed to retain sediment onsite to the extent practicable and all control measures must be selected, installed, and maintained in accordance with manufacturer's specifications and good engineering practices. In addition, practices must be included for interim and permanent stabilization for the site, including a schedule of when the practices will be implemented. When construction activities temporarily or permanently cease on a portion of the site, stabilization measures must be initiated by the 14th day for erosion control. However, if the site will be redisturbed within 21 days this requirement is waived.

A site with more than 10 disturbed acres of common drainage must provide a temporary/permanent sediment basin with 3,600 cubic feet of storage per acre drained. When a sediment basin is not attainable, the SWPPP should identify all equivalent sediment controls.

The SWPPP must include a description of structural practices to divert flows from exposed soils, store flows or otherwise limit runoff and the discharge of pollutants from exposed areas of the site to the degree attainable.

(2) Storm Water Management

The permittee must consider installing measures (storm water detention structures, infiltration measures, etc.) to control pollutants after construction is complete (i.e., post-construction). Velocity dissipation devices must be installed in outfall channels to prevent erosion.

(3) Other Controls

The SWPPP must ensure that construction waste is not carried by storm water into the receiving waters. Measures must be taken to prevent construction vehicles from tracking soil off the construction site and to reduce the dust generation at the construction site. The operator must comply with State and/or local sanitary sewer or septic system regulations.

Where State and local programs for sediment and erosion control, storm water management, or site permits exist, the operator must certify that the SWPPP reflects and is in compliance with the requirements of the applicable State or local program.

This SWPPP must also specify that operator personnel must inspect the construction site at least once every 7 days or at least every 14 days and within 24 hours of a rainfall of 0.5 inches or more. Areas with sites that have been finally stabilized or sites that are located in arid (i.e., less than 10 inches of rain per year) or semi-arid (10 to 20 inches of rain per year) areas must be inspected at least once a month. The inspector must prepare a report documenting his/her findings on the conditions of the controls and stabilized areas. The inspector should verify that documentation of the routine inspections is included in the SWPPP.

The worksheet provided in Appendix R can be use to evaluate specific elements of the Storm Water Pollution Prevention Plan for construction activities.

SWPPP Implementation/In the Field

Are They Doing What The SWPPP Indicates?

When conducting the field inspection of a construction site, inspector should note several items:

- The opening conference with the owner/operator is extremely important. Often at larger residential construction sites, there will be multiple builders side-by-side with no delineation between them but each one of them is responsible for one or more aspects of SWPPP implementation. It is also important to identify the permittee and or co-permittees and their respective responsibilities under the permit. In some cases, the permittee is the developer who then passes along responsibility for aspects of the SWPPP implementation to the individual builders.

- It is absolutely necessary to review the site map before conducting the inspection because if the inspector does not know the site boundaries, it is difficult to identify and evaluate the runoff potential.

- Review construction sequence and BMP sequence given in the SWPPP - verify that these have been met.

- The closing conference provides an opportunity to describe deficiencies found and identify areas of concern (e.g., parts of a SWPPP missing; inspections not being done; silt fence not installed; discharge to a storm drain, etc...). Given the transient nature of most construction sites it is important to share information with the site owner/operator as quickly as possible (e.g., prior to issuance of final inspection report) so that any environmental harm can be minimized.

In the field, the inspector should verify that the description of potential pollutant sources in the SWPPP reflects current conditions. In addition, the inspector should verify that measures and controls described in the SWPPP are being implemented as described in the SWPPP.

Implementation of SWPPPs require facilities to implement BMPs and train employees on how to carry out the goals of the SWPPP. The inspector should evaluate any implementation schedules developed by the facility for carrying out the SWPPP (e.g., deadlines for putting improved housekeeping measures into practice). The inspector should also determine whether appropriate individuals have been assigned to implement the specific aspects of the SWPPP and whether these individuals are aware of the requirements of that designation. If the SWPPP calls for the installation of structural controls, the inspector should verify that the controls are in place and in good working order or that the facility is on an appropriate schedule for construction of the structural control measures. The inspector should also ensure that management approves of the implementation schedule and strategy and is aware of the SWPPP process.

An example of problems that an inspector may observe during a construction site inspection includes:

- Failure to self-inspect

- Silt fences improperly located, falling over, or ripped so that the fence is not functioning properly

- Poor housekeeping: oil stains on soil; over turned drums, uncovered pails containing liquids; cluttered equipment storage with leaking fluids; fuel tanks with no containment

- Storm drain inlets: covered with sediment/debris; ruptured gravel bags with loss of gravel into drain; no protection
- Trackout pads: filled with soil and not effective; dirt on roads.
- No cement washout

A worksheet that can help guide the inspector through the field inspection is presented in Appendix R. Site-specific BMPs for construction activities are summarized in Figure 11-3.

Figure 11-3

Site-Specific Construction Storm Water BMPs

Stabilization Practices: Stabilization is practiced to control erosion due to unvegetated areas. Stabilization reduces erosion potential in four ways: (1) by shielding the soil surface from direct erosive impact of raindrops, (2) by improving the soil's water storage porosity and capacity, (3) by slowing the runoff and allowing the sediment to drop out or deposit; and (4) by physically holding the soil in place with plant roots. Vegetative (e.g., grasses, trees, or shrubs) covers are the most common type of stabilization.

Stabilization practices include temporary seeding, mulching, geotextiles, chemical stabilization, permanent seeding and planting, buffer zones, preservation of natural vegetation, sod stabilization, stream bank stabilization, soil retaining measures, and dust control.

Structural Erosion and Sediment Control Practices: Structural erosion and sediment control diverts storm water flows away from exposed areas, conveys runoff, prevents sediments from moving offsite, and reduces the erosive forces of runoff waters.

Structural erosion and sediment control practices include earth dikes, drainage swales, interceptor dikes and swales, temporary stream crossing, temporary storm drain diversion, pipe slope drains, subsurface drains, silt fence, gravel or stone filter berm, storm drain inlet protection, sediment trap, temporary sediment basin, outlet protection, check dams, surface roughening, and gradient terraces.

This page intentionally left blank.

11. D. Storm Water Discharges From Municipal Separate Storm Sewer Systems

Applicability (Who is Covered)

In addition to regulating discharges from the 11 categories of sites with industrial activities, the storm water program regulates discharges from municipal separate storm sewer systems (MS4s).

The November 16, 1990, regulations identify a two-part storm water permit application process for medium (serving a population of 100,000 or more, but fewer than 250,000) and large (serving a population of more than 250,000) MS4s in 40 *CFR* 122.26(d), pursuant to 402(p)(2)(C)-(D) of the CWA. The regulations identify 220 cities and counties that meet this requirement (and allow for case-by-case designations of other municipal storm sewers to be included in these systems). In addition to the designated counties and cities, other entities may be regulated such as Departments of Transportation or flood control districts. To date, a total of approximately 1,000 entities (cities, counties, DOTs, etc.) are covered under 270 permits nationwide. Part 1 applications for municipal storm sewer systems were due to EPA on November 18, 1991, (large systems) and May 18, 1992 (medium systems). Part 2 applications for these permittees were due to EPA on November 16, 1992, (large systems) and May 17, 1993 (medium systems). No new medium or large MS4s will be permitted under the Phase I requirements. All future MS4s are to obtain permit coverage under the Phase II regulations.

The Phase II Final Rule, published in the Federal Register on December 8, 1999, requires NPDES permit coverage for storm water discharges from certain regulated small MS4s. Only a select subset of small MS4s, referred to as regulated small MS4s, require an NPDES storm water permit. Small MS4s are defined as any MS4 that is not a medium or large MS4 covered by Phase I of the NPDES Storm Water Program. Regulated small MS4s are defined as all small MS4s located in "urbanized areas" (UAs) as defined by the Bureau of the Census, and those small MS4s located outside of a UA that are designated by NPDES permitting authorities. A small MS4 can be designated by the permitting authority as a regulated small MS4 in one of two ways. One, the small MS4 located outside of a UA is designated as a regulated small MS4 by the NPDES permitting authority because its discharges cause, or have the potential to cause, an adverse impact on water quality. Two, the small MS4 located outside of a UA contributes substantially to the pollutant loadings of a *physically interconnected* MS4 regulated by the NPDES storm water program. Note: The NPDES permitting authority was required to designate small MS4s meeting the designation criteria by December 9, 2002, or by December 8, 2004, if a watershed plan is in place.

Waivers

Permitting authorities may waive “automatically designated” Phase II dischargers if the dischargers meet the necessary criteria. Two waiver options are available to operators of automatically designated small MS4s if discharges do not cause, or have the potential to cause water quality impairment. Note: the waivers are granted by the NPDES authority. The operator

of the regulated small MS4 cannot determine that the facility meets the waiver criteria. If the permitting authority is not proactive in assessing small MS4s for potential waivers, an operator may petition for a waiver assessment. If a permitting authority decides to grant waivers, it must have done so by December 9, 2002, to coincide with the expected issuance of the small MS4 general permit. If the permit authority chooses to phase in permit coverage based on a comprehensive watershed plan, then regulated small MS4s may be waived on the same schedule. The phase-in of permit coverage and waivers is to be completed no later than March 8, 2007.

The first waiver option applies where:

(1) the jurisdiction served by the system is less than 1,000 people;

(2) the system is not contributing substantially to the pollutant loadings of a physically interconnected regulated MS4; and

(3) if the small MS4 discharges any pollutants identified as a cause of impairment of any water body to which it discharges, storm water controls are not needed based on wasteload allocations that are part of an EPA approved or established "total maximum daily load" TMDL that addresses the pollutant(s) of concern.

The third criterion of this waiver option need only be met if the small MS4 is discharging into a impaired water body and the discharge contains a pollutant or pollutants cause the impairment (i.e., the "pollutants of concern").

The second waiver option applies where:

(1) the jurisdiction served by the system is less than 10,000 people;

(2) an evaluation of all waters of the U.S. that receive a discharge from the system shows that storm water controls are not needed based on wasteload allocations that are part of the EPA approved or established TMDL that addresses the pollutant(s) of concern or an equivalent analysis; and

(3) it is determined that future discharges from the small MS4 do not have the potential to result in exceedences of water quality standards.

The NPDES permitting authority is required to periodically review any waivers granted to MS4 operators to determine whether any information required for granting the waiver has changed. Minimally, such a review needs to be conducted once every five years.

Permit Applications for Storm Water Discharges From Municipal Separate Storm Sewer Systems

Permits must be obtained for all discharges from large, medium, and regulated small municipal separate storm sewer systems (and designated others as determined on a case-by-case basis). The permitting authority may issue one system-wide permit covering all discharges from

municipal separate storm sewer systems or issue distinct permits for appropriate categories of discharges. Also, the permitting authority may issue permits for other municipal separate storm sewer systems on a system-wide or categorical basis. EPA did not develop baseline general permits for storm water discharges from municipal separate storm sewer systems, because of the differing nature of discharges from municipal separate storm sewer systems in different parts of the country and the varying water quality impacts of municipal storm sewer discharges on receiving waters. Based on permit application requirements, these permits will likely address applicability, legal authority, source identification, discharge characterization, management programs, control and impact assessments, and financial commitments. In many instances, these permits will be unique to the individual permittee; therefore, a definitive discussion of the permit requirements for the municipal separate storm sewer system permittees is not possible.

Unlike the Phase I program that primarily utilizes individual permits for medium and large MS4s, the Phase II approach allows operators of regulated small MS4s to choose from as many as three permitting options: (1) general permits, (2) individual permits, or (3) modification of an existing Phase I Individual Permit (Co-Permittee Option). It must be noted that the NPDES permitting authority reserves the authority to determine which options are available to the regulated small MS4s. Operators of “automatically designated” regulated small MS4s in urbanized areas submit their Notices of Intent within 90 days of permit issuance. Operators of regulated small MS4s designated by the permitting authority must submit their permit applications within 180 days of notice. Full implementation of MS4's program is required within 5 years of permit issuance.

General permits for regulated small MS4s are strongly encouraged by EPA. The Phase II program has been designed specifically to accommodate a general permit approach. General permits prescribe one set of requirements for all applicable permittees. General permits are drafted by the NPDES permitting authority, then published for public comment before being finalized and issued. A NOI serves as the application for the general permit. The regulated small MS4 operator complies with the permit application requirements by submitting an NOI to the NPDES permitting authority that describes the storm water management program, including best management practices (BMPs) and measurable goals. The operator has the flexibility to develop an individualized storm water program that addresses the particular characteristics and needs of its system, provided the requirements of the general permit are satisfied. Permittees also can choose to share responsibilities for meeting the Phase II program requirements. Those entities choosing to do so may submit jointly with the other municipalities or governmental entities an NOI that identifies who will implement which minimum measures within the area served by the MS4.

Individual permits are required for Phase I medium and large MS4s, but not recommended by EPA for Phase II program implementation. Individual permits prescribe a particular set of requirements for a particular permittee or a group of co-permittees. Individual permits require the submission of a more comprehensive application than an NOI that is submitted under a general permit. Once the permit application is received, an individual permit is drafted by the NPDES permitting authority, then published for public comment before being finalized and issued. The Phase II rule allows a regulated small MS4 to submit an individual application for coverage under either the Phase II MS4 program (see 122.34) or the Phase I MS4 program (see 122.26(d)). For individual coverage under Phase II, the permittee must follow Phase II application requirements and provide an estimate of square mileage served by the system and any additional information requested by the NPDES permitting authority. The permittee electing to apply for coverage under Phase I program must follow the permit application requirements

detailed at 122.26(d). The NPDES permitting authority may allow more than one regulated entity to apply for an individual permit (i.e., co-permittees).

Two permitting options tailored to minimize duplication of effort can be incorporated into both the general permit and the individual permit by the NPDES permitting authority. First, the permitting authority can recognize in the permit that another governmental entity is responsible under an NPDES permit for implementing any or all minimum measures. Responsibility for implementation of the measure(s) would rest with the other governmental entity, thereby relieving the permittee of its responsibility to implement that particular measure(s). Second, the NPDES permitting authority can include conditions in a general permit that direct a permittee to follow the requirements of an existing qualifying local program rather than the requirements of a minimum measure. A qualifying local program is defined as a local, State, or Tribal municipal storm water program that imposes requirements that are equivalent to those of Phase II MS4 minimum measures. The permittee remains responsible for the implementation of the minimum measure through compliance with the qualifying local program.

The operator of a regulated small MS4 could participate as a limited co-permittee in a neighboring Phase I MS4's storm water management program by seeking a modification of the existing Phase I individual permit. A list of Phase I medium and large MS4s can be obtained from the EPA Office of Wastewater Management (OWM) or downloaded from the OWM, web site at http://www.epa.gov/npdes. The permittee must follow Phase I permit application requirements (with some exclusions). The permittee must comply with the applicable terms of the Phase I individual permit rather than the minimum control measures in the Phase II Final Rule.

A summary of the permit application deadlines is presented in Table 11-3. The Transportation Act of 1991 modified the application deadlines for industrial activities owned or operated by municipalities (i.e., types of industrial activities covered by MSGP). The Phase II Rule required industrial activities operated by municipalities with populations less than 100,000 to obtain permit coverage to no later than March 10, 2003, (unless the NPDES permitting authority chooses to phase-in permit coverage on a watershed basis and establishes other deadlines). As such, all industrial activities defined in 122.26(b)(14) are now required to obtain coverage, unless waived.

Storm Water Management Program (SWMP) Development

Phase I Completed as Part of the Permit Application

The storm water management program (SWMP) is considered to be the most important requirement of a MS4 permit. Existing structural and non-structural prevention and control measures on discharges from municipal separate storm sewers must be described in Part 1 of the permit application.

The discussion that follows provides a general discussion of SWMP requirements for MS4s. The inspector will have to review the facility's permit for specific considerations. Each MS4 covered by a permit must develop a SWMP, tailored to system-specific conditions and designed to control the amount of pollutants in storm water discharges from the system. The permitting authority has the right to review and request changes in the SWMP. Summaries of necessary components of these programs for MS4s are provided below for both large- and medium-size municipalities.

Management programs must describe priorities for implementing controls and should be based on the following four requirements:

1. Describe structural and source control measures to be implemented during the life of the permit to reduce pollutants from runoff from commercial and residential areas that is discharged from the MS4s. The description must be accompanied by an estimate of the expected reduction of pollutant loads and a proposed schedule for implementing such controls. At a minimum, the description should include:

    - Maintenance activities and a maintenance schedule for structural controls.

    - Planning procedures to develop, implement, and enforce controls to reduce discharges from areas of new development and significant redevelopment after construction is complete.

    - Practices for operating and maintaining public streets, roads, etc., and procedures for reducing the impact as a result of deicing activities.

    - Procedures to ensure that flood management projects assess the impacts on the water quality of receiving water bodies and that existing structural flood control devices have been evaluated if retrofitting is possible for additional pollutant removal.

    - Program to monitor pollutants in runoff from operating or closed municipal landfills or other treatment, storage, or disposal facilities for municipal waste, that identifies priorities and procedures for inspections and establishing and implementing control measures for such discharges.

    - Program to reduce to the MEP pollutants in discharges from the application of pesticides, herbicides, and fertilizers. This may include educational activities, permits, certifications, and other measures for commercial applicators and

distributors, and controls for application in public right-of-ways and at municipal facilities.

2. Describe programs, including a schedule, to detect and remove (or to require the discharger to the municipal separate storm sewer system to obtain a separate NPDES permit for) illicit discharges and improper disposal into the storm sewer. At a minimum, the proposed program should include:

   - Inspection procedures, to implement and enforce an ordinance, order, or similar means to prevent illicit discharges to the municipal separate storm sewer system

   - Procedures to conduct on-going field screening activities during the life of the permit

   - Procedures to be followed to investigate portions of the separate storm sewer system that indicate a reasonable potential of containing illicit discharges or other sources of non-storm water

   - Procedures to prevent, contain, and respond to spills that may discharge into the municipal separate storm sewer

   - Program to promote, publicize, and facilitate public reporting of the presence of illicit discharges or water quality impacts associated with discharges from MS4s

   - Educational activities, public information activities, and other appropriate activities to facilitate the proper management and disposal of used oil and toxic materials

   - Controls to limit infiltration of seepage from municipal sanitary sewers to MS4s.

3. Describe programs to monitor and control pollutants in storm water discharges to municipal systems from municipal landfills; hazardous waste treatment, disposal, and recovery facilities; industrial facilities that are subject to section 313 of SARA Title III; and industrial facilities that the municipal permit applicant determines are contributing a substantial loading to the MS4s. The program should include:

   - Priorities and procedures for inspections and establishing and implementing control measures for such discharges

   - Monitoring program for storm water discharges associated with industrial facilities identified in 3., to be implemented during the term of the permit, including the submission of quantitative data.

4. Describe programs to implement and maintain structural and non-structural best management practices to reduce pollutants in storm water runoff from construction sites to the municipal separate storm sewer system. This program should include:

   - Procedures for site planning that incorporate consideration of potential water quality impacts

   - Requirements for non-structural and structural best management practices

- Procedures for identifying priorities for inspecting sites and enforcing control measures that consider the nature of the construction activity, the topography, and the characteristics of soils and receiving water quality

- Appropriate educational and training measures for construction site operators.

Phase II Completed as Part of the Permit Application or Notice of Intent

The Phase II regulations require regulated small MS4s to develop SWMPs similar, but not identical, to those developed by medium/large MS4s. Consistent with the requirements for medium/large MS4 requirements, small MS4 permits require at a minimum that the permittee develop, implement, and enforce a SWMP designed to reduce the discharge of pollutants from the MS4 to the maximum extent practicable (MEP), to protect water quality, and to satisfy the appropriate water quality requirements of the Clean Water Act. Slightly different from the Phase I requirements, the Phase II requirements for SWMPs include the six minimum control measures described below:

(1) Public education and outreach on storm water impacts that distribute educational materials to the community or conduct equivalent outreach activities about the impacts of storm water discharges on water bodies and the steps that the public can take to reduce pollutants in storm water runoff.

(2) Public involvement/participation on storm water controls, at a minimum, complying with State, Tribal and local public notice requirements.

(3) Illicit discharge detection and elimination program that includes:
- a storm sewer system map, showing the location of all outfalls and the names and location of all waters of the United States that receive discharges from those outfalls;
- an ordinance or other regulatory mechanism, that effectively prohibits non-storm water discharges into the storm sewer system
- appropriate enforcement procedures and actions;
- a plan to detect and address non-storm water discharges, including illegal dumping, to the system; and
- outreach that informs public employees, businesses, and the general public of hazards associated with illegal discharges and improper disposal of waste.

(4) Construction site storm water runoff control program to reduce pollutants in any storm water runoff to your small MS4 from construction activities that result in a land disturbance of greater than or equal to one acre. The program must include the development and implementation of, at a minimum:
- an ordinance or other regulatory mechanism to require erosion and sediment controls, as well as sanctions to ensure compliance;
- requirements for construction site operators to implement appropriate erosion and sediment control best management practices;
- requirements for construction site operators to control waste such as discarded building materials, concrete truck washout, chemicals, litter, and sanitary waste at the construction site that may cause adverse impacts to water quality;
- procedures for site plan review which incorporate consideration of potential water quality impacts;
- procedures for receipt and consideration of information submitted by the public, and
- procedures for site inspection and enforcement of control measures.

(5) Post-construction storm water management program in new development and redevelopment for projects that disturb greater than or equal to one acre, including projects less than one acre that are part of a larger common plan of development or sale, that discharge into the MS4. The controls must include strategies which include a combination of structural and/or non-structural best management practices (BMPs) appropriate for the community; use an ordinance or other regulatory mechanism to address post-construction runoff from new development and redevelopment projects to the extent allowable under State, Tribal or local law; and ensure adequate long-term operation and maintenance of BMPs.

(6) Pollution prevention/good housekeeping for municipal operations that includes a training component and has the ultimate goal of preventing or reducing pollutant runoff from municipal operations. Your program must include employee training to prevent and reduce storm water pollution from activities such as park and open space maintenance, fleet and building maintenance, new construction and land disturbances, and storm water system maintenance.

As part of the small MS4 NOI submission to the permitting authority, the MS4 is required to submit the BMPs that will be implemented for each of the six minimum control measures listed above. In addition, the NOI must identify the measurable goals for each of the BMPs, including, as appropriate, the months and years in which the MS4 will take the required actions, including interim milestones and the frequency of the action. The NOI must also identify the person or persons responsible for implementing or coordinating the SWMP.

SWMP Implementation/In the Field

The inspector should verify that the storm water management program is being implemented as appropriate to meet the current circumstances in the municipality. Implementation of management programs requires facilities to implement a variety of control measures, programs, procedures, and training of various individuals on how to carry out the goals of the program. The inspector should evaluate any implementation schedules developed by the municipality for carrying out the program and determine whether appropriate individuals have been assigned to implement the specific aspects of the program and if these individuals are aware of the requirements of that designation. The inspector should evaluate the municipality's inspection and enforcement program for industrial facilities and construction sites. In addition, the inspector should verify whether the municipality's dry weather screening program is being implemented according to the permit schedule. If the program calls for the installation or maintenance of structural controls, the inspector should verify that the controls are in place and in good working order or that the facility is on an appropriate schedule for construction of the structural control measures.

This page intentionally left blank.

11. E. References

API. August 1989. "Suggested Procedure for Development of Spill Prevention Control and Countermeasure Plans," American Petroleum Institute Bulletin D16, Second Edition.

APWA. 1989. Urban Storm Water Management, Special Report No. 49. American Public Works Association Research Foundation.

Arapahoe County. April 8, 1988. "Erosion Control Standards." prepared by Kiowa Engineering Corporation.

Commonwealth of Pennsylvania. April 1990. Erosion and Sediment Pollution Control Program Manual, Pennsylvania Department of Environmental Resources, Bureau of Soil and Water Conservation.

Commonwealth of Virginia. 1980. Virginia Erosion and Sediment Control Handbook, Virginia Department of Conservation and Historical Preservation, Division of Soil and Water Conservation, Second Edition.

County of Fairfax. 1990 and 1987 Editions. "Check List For Erosion and Sediment Control Fairfax County, Virginia."

MWCOG. July 1987. Controlling Urban Runoff: A Practical Manual for Planning and Designing Urban BMPs," Department of Environmental Programs, Metropolitan Washington Council of Governments.

Northern Virginia Planning District Commission. August 1987. BMP Handbook for the Occoquan Watershed, prepared for Occoquan Basin Nonpoint Pollution Management Program.

Salt Institute. 1987. The Salt Storage Handbook, A Practical Guide for Storing and Handling Deicing Salt. Alexandria, Virginia.

Santa Clara Valley Nonpoint Source Pollution Control Program. Automotive-Related Industries, BMPs for Industrial Sanitary Sewer Discharges and Storm Water Pollution Control.

State of Maryland. April 1983. 1983 Maryland Standards and Specifications for Soil and Erosion and Sediment Control. Maryland Water Resources Administration, Soil Conservation Service, and State Soil Conservation Committee.

State of North Carolina. September 1, 1988. Erosion and Sediment Control Planning and Design Manual. North Carolina Sedimentation Control Commission, Department of Natural Resources and Community Development, and Agricultural Extension Service.

State of Wisconsin. June 1990. Wisconsin Construction Site Best Management Practice Handbook. Wisconsin Department of Natural Resources, Bureau of Water Resources Management, Nonpoint Source and Land Management Section.

Thron, H. and O.J. Rogashewski. 1982. "Useful Tools for Cleaning Up." Hazardous Material & Spills Conference.

U.S. Environmental Protection Agency. CZARA NPS Guidance.

U.S. Environmental Protection Agency. December 1991. "Draft - A Current Assessment of Urban Best Management Practices. Techniques for Reducing Non-point Source Pollution in the Coastal Zone." EPA Office of Wetlands, Oceans and Watersheds, prepared by Metropolitan Washington Council of Governments.

U.S. Environmental Protection Agency. June 26, 1991. "Draft Construction Site Storm Water Discharge Control, An Inventory of Current Practices." EPA Office of Water Enforcement and Permits, prepared by Kamber Engineering.

U.S. Environmental Protection Agency. June 1987. "Draft Report on Best Management Practices for the Control of Storm Water From Urbanized Areas." Science Applications International Corporation.

U.S. Environmental Protection Agency. April 20, 1990. "Draft Sediment and Erosion Control, An Inventory of Current Practices." EPA Office of Water Enforcement and Permits, prepared by Kamber Engineering.

U.S. Environmental Protection Agency. April 1991. Guidance Manual for the Preparation of NPDES Permit Applications for Discharges Associated with Industrial Activity. EPA-505/8-91-002.

U.S. Environmental Protection Agency. April 1991. Guidance Manual for the Preparation of NPDES Permit Applications for Discharges From Municipal Separate Storm Water Systems. EPA-505/8-91-003A.

U.S. Environmental Protection Agency. January 1993. "Investigation of Inappropriate Pollutant Entries into Storm Drainage Systems, A User's Guide. EPA/600/R-92/238.

U.S. Environmental Protection Agency. December 1979. NPDES Best Management Practices Guidance Document. Industrial Environmental Research Laboratory, Cincinnati, Ohio, prepared by Hydroscience, Inc., EPA 600/9-79-0451.

U.S. Environmental Protection Agency. March 1992. NPDES Storm Water Program Question and Answer Document. Office of Wastewater Enforcement and Compliance, Permits Division.

U.S. Environmental Protection Agency. July 1993. NPDES Storm Water Program Question and Answer Document: Volume II. Office of Wastewater Enforcement and Compliance, Permits Division.

U.S. Environmental Protection Agency. October 1989. Pollution Prevention in Printing and Allied Industries: Saving Money Through Pollution Prevention. Office of Research and Development, Pollution Prevention Office.

U.S. Environmental Protection Agency. January 1992. Pollution Prevention Training Opportunities in 1992. EPA/560/8-92-002. (A comprehensive listing of pollution prevention resources, documents, courses, and programs, including names and phone numbers, is contained in a new annual EPA publication. Copies of this document may be obtained by calling the PPIC/PIES support number at (703) 821-4800.)

U.S. Environmental Protection Agency. October 1973. Process, Procedure, and Methods to Control Pollution Resulting from All Construction Activity. EPA Office of Air and Water Programs, PB-257-318.

U.S. Environmental Protection Agency. July 1991. Staff Analysis. Storm Water Section.

U.S. Environmental Protection Agency. September 1992. Storm Water Management for Industrial Activities, Developing Pollution Prevention Plans and Best Management Practices. EPA-832-R-92-006.

U.S. Environmental Protection Agency. September 1992. Storm Water Management for Construction Activities, Developing Pollution Prevention Plans and Best Management Practices. EPA-832-R-92-005.

U.S. Environmental Protection Agency. July 1992. Storm Water Sampling Guidance Document. EPA 833-B-92-001.

U.S. Environmental Protection Agency. July 1988. Waste Minimization Opportunity Assessment Manual. Hazardous Waste Engineering Research Laboratory.

U.S. Environmental Protection Agency. September 1997. Checklist for No-Exposure certification for NPDES Stormwater Permitting.

U.S. Environmental Protection Agency. February 1998. Guidance Manual for Implementing Storm Water Management Programs - Volume I - Planning and Administration. EPA 833-B-00-001.

U.S. Environmental Protection Agency. January 1999. Guidance Manual for the Monitoring and Reporting Requirements of the NPDES Storm Water Multi-Sector General Permit. EPA 833-B-99-001.

U.S. Environmental Protection Agency. September 1999. Storm Water Management Fact Sheet Internal Reporting. EPA 832-F-99-020.

U.S. Environmental Protection Agency. September 1999. Storm Water Management Fact Sheet Materials Inventory. EPA 832-F-99-021.

U.S. Environmental Protection Agency. September 1999. Storm Water Management Fact Sheet Non-Storm Water Discharges. EPA 832-F-99-022.

U.S. Environmental Protection Agency. September 1999. Storm Water O&M Fact Sheet Preventative Maintenance. EPA 832-F-99-004.

U.S. Environmental Protection Agency. September 1999. Storm Water Management Fact Sheet Record Keeping. EPA 832-F-99-005.

U.S. Environmental Protection Agency. September 1999. Storm Water Management Fact Sheet Spill Prevention Planning. EPA 832-F-99-071.

U.S. Environmental Protection Agency. September 1999. Storm Water Management Fact Sheet Storm Water Contamination Assessment. EPA 832-F-99-024.

U.S. Environmental Protection Agency. September 1999. Storm Water Management Fact Sheet Dust Control. EPA 832-F-99-003.

U.S. Environmental Protection Agency. September 1999. Storm Water Management Fact Sheet Coverings. EPA 832-F-99-009.

U.S. Environmental Protection Agency. September 1999. Storm Water O&M Fact Sheet Catch Basin Cleaning. EPA 832-F-99-011.

U.S. Environmental Protection Agency. September 1999. Storm Water Technology Fact Sheet Bioretention. EPA 832-F-99-012.

U.S. Environmental Protection Agency. September 1999. Storm Water Technology Fact Sheet Flow Diversion. EPA 832-F-99-014.

U.S. Environmental Protection Agency. September 1999. Storm Water Technology Fact Sheet Hydrodynamic Separators. EPA 832-F-99-017.

U.S. Environmental Protection Agency. January 2000. Storm Water Phase II Final Rule - An Overview. EPA 833-F-00-001.

U.S. Environmental Protection Agency. January 2000. Storm Water Phase II Final Rule - Conditional No Exposure Exclusion for Industrial Activity. EPA 833-F-00-015.

U.S. Environmental Protection Agency. January 2000. Storm Water Phase II Final Rule - Construction Site Runoff Control Minimum Control Measure. EPA 833-F-00-008.

U.S. Environmental Protection Agency. January 2000. Storm Water Phase II Final Rule - Illicit Discharge Detection and Elimination Minimum Control Measure. EPA 833-F-00-007.

U.S. Environmental Protection Agency. January 2000. Storm Water Phase II Final Rule - Low Rainfall Erosivity Waiver. EPA 833-F-00-014.

U.S. Environmental Protection Agency. January 2000. Storm Water Phase II Final Rule - Permitting and Reporting: The Process and Requirements. EPA 833-F-00-011.

U.S. Environmental Protection Agency. January 2000. Storm Water Phase II Final Rule - Pollution Prevention/Good Housekeeping Minimum Control Measure. EPA 833-F-00-010.

U.S. Environmental Protection Agency. January 2000. Storm Water Phase II Final Rule - Post Construction Runoff Control Minimum Control Measure. EPA 833-F-00-009.

U.S. Environmental Protection Agency. January 2000. Storm Water Phase II Final Rule - Public Participation/Involvement Minimum Control Measures. EPA 833-F-00-006.

U.S. Environmental Protection Agency. January 2000. Storm Water Phase II Final Rule - Small Construction Program Overview. EPA 833-F-00-013.

U.S. Environmental Protection Agency. January 2000. Storm Water Phase II - Compliance Assistance Guide. EPA 833-R-00-002.

U.S. Environmental Protection Agency. January 2000. Guidance Manual for Conditional Exclusion from Storm Water Permitting Based On “No Exposure” of Industrial Activities to Storm Water. EPA 833-B-00-001.

U.S. Environmental Protection Agency. January 2000. Storm Water Phase II Final Rule - Small MS4 Storm Water Program Overview. EPA 833-F-00-002.

Washington State. January 23, 1992. "Draft Storm Water Management Manual for the Puget Sound Basin." Washington State Department of Ecology.

Washington State. July 29, 1991. "Standards for Storm Water Management for the Puget Sound Basin," Chapter 173-275 WAC. Washington State Department of Ecology.

Regulations/Notices

Federal Register (55 FR 47990). November 16, 1990. National Pollutant Discharge Elimination System (NPDES) Permit Application Requirements for Storm Water Discharges - Final Rule.

Federal Register (56 FR 12098). March 21, 1991. Application Deadline for Group Applications–Final Rule; Application Deadline for Individual Applications - Proposed Rule.

Federal Register (56 FR 40948). August 16, 1991. NPDES General Permits and Reporting Requirements for Storm Water Discharges Associated With Industrial Activity-Proposed Rule.

Federal Register (56 FR 50548). November 5, 1991. Application Deadline; Final Rule and Proposed Rule.

Federal Register (57 FR 11394). April 2, 1992. Application Deadlines, General Permit Requirements and Reporting Requirements-Final Rule.

Federal Register (57 FR 41176). September 9, 1992. Final NPDES General Permits for Storm Water Discharges from Construction Sites; Notice.

Federal Register (57 FR 44412). September 25, 1992. Final NPDES General Permits for Storm Water Discharges from Construction Sites; Notice.

Federal Register (57 FR 41236). September 9, 1992. Final NPDES General Permits for Storm Water Associated with Industrial Activity; Notice.

Federal Register (57 FR 44438). September 25, 1992. Final NPDES General Permits for Storm Water Associated with Industrial Activity; Notice.

Federal Register (57 FR 41344). September 9, 1992. National Pollutant Discharge Elimination System, Request for Comment on Alternative Approaches for Phase II Storm Water Program; Proposed Rule.

Federal Register (57 FR 60444). December 18, 1992. Permit Issuance and Permit Compliance Deadlines for Phase I Discharges; Final Rule.

Federal Register (58 FR 19427). April 14, 1993. NPDES General Permit for Storm Water Discharges Associated with Industrial Activity Located in the Commonwealth of Puerto Rico; Notice.

Federal Register (60 FR 50804). September 29,1995. Final National Pollutant Discharge Elimination System Storm Water Multi-sector General Permit for Industrial Activities; Notice.

Federal Register (64 FR 68721). December 8, 1999. NPDES Regulations for Revision of the Water Pollution Control Program Addressing Storm Water Discharges; Final Rule.

Federal Register (65 FR 64746). October 30, 2000. Final Reissuance of National Pollutant Discharge Elimination System (NPDES) Storm Water Multi-Sector General Permit for Industrial Activities; Notice of Final NPDES General Permit.

Federal Register (68 FR 39087). July 1, 2003. Final National Pollutant Discharge Elimination System (NPDES) General Permit for Storm Water Discharges From Construction Activities; Notice of Final Issuance.

Soon to be Available

Your Oil and Gas Construction Activities May Coverage Under the Clean Water Act's Stormwater Program!

Managing Your Environmental Obligations: A Start to Finish Cost and Responsibility Planning Guide for the Construction and Development Industries

Managing Your Environmental Responsibilities: A Planning Guide for the Construction and Development Industries

12. COMBINED SEWER OVERFLOWS

Contents Page

A. Background and History of the CSO Policy 12-1

B. CSO Inspection Procedures 12-5
Preparation 12-5
Onsite Records Review 12-7
Interviews 12-7
Facility Site Inspection 12-8

C. References and Checklist 12-15
References 12-15
CSO Evaluation Checklist 12-16

List of Tables

12-1. Nine Minimum CSO Controls 12-3
12-2. Elements of the Long-Term CSO Control Plan 12-3
12-3. CSO Records 12-10
12-4. CSO Interview Questions 12-12

Related Websites

Office of Wastewater Management (OWM) Homepage: http://www.epa.gov/owm

This page intentionally left blank.

12. A. Background and History of the CSO Policy

In addition to materials in this chapter, inspectors must be familiar with Chapter 1 - "Introduction" & Chapter 2 - "Inspection Procedures".

As defined in the CSO Control Policy, a combined sewer system (CSS) is "a wastewater collection system owned by a state or municipality [as defined by Section 502(4) of the Clean Water Act] which conveys sanitary wastewater (domestic, commercial and industrial wastewaters) and storm water through a single-pipe system." During precipitation events (e.g., rainfall or snowmelt), the volume of sanitary wastewater and storm water runoff entering CSSs often exceeds the capacity of the system to transport the combined wastewaters to the publicly-owned treatment works (POTWs). When this happens, these systems are designed to overflow directly to surface waters. These overflows are combined sewer overflows (CSOs). Some CSOs occur infrequently; others, with every precipitation event. Because CSOs contain raw sewage and contribute pathogens, solids, debris, and toxic pollutants to receiving waters, CSOs can create serious public health and water quality concerns. CSOs have caused or contributed to beach closures, shellfish bed closures, contamination of drinking water supplies, and other environmental and public health problems.

Approximately 772 communities in the U.S. have CSSs that have 9,471 permitted CSO outfalls that are regulated by 859 NPDES permits. CSOs are point sources subject to NPDES permit requirements including the technology-based and water quality-based requirements of the Clean Water Act (CWA). CSOs are not subject to the secondary treatment requirements that are applicable to POTWs., but are subject to BAT/BCT requirements based upon a BPJ case by case determination.

EPA's 1994 CSO Control Policy (59 *FR* 18688, April 19, 1994) "represents a comprehensive national strategy to ensure that municipalities, permitting authorities, water quality standards authorities and the public engage in a comprehensive and coordinated effort to achieve cost effective CSO controls that ultimately meet appropriate health and environmental objectives." Under the Policy, CSO communities were expected, through requirements in their NPDES permit or in another enforceable mechanism, to:

- Implement nine minimum controls (NMC) that may be considered minimum BAT/BCT, based on the permitting authority. These NMC are measures that can reduce CSOs and their water quality impacts without significant engineering studies or major construction. CSO communities were expected to implement the NMC by January 1, 1997

- Develop a long-term CSO control plan (LTCP) generally within 2 years of NPDES permit issuance or the issuance date of another enforceable mechanism requiring the CSO community to develop a LTCP

- Implement the LTCP. Implementation of the individual CSO controls may be phased based on the relative importance of adverse impacts of the CSOs on water quality standards, priority projects identified in the LTCP, and on the permittee's financial capability

- Implement a post-construction compliance monitoring program.

Permitting and enforcement authorities are expected to take enforcement action against dry weather CSO discharges.
As outlined in the CSO Policy, the nine minimum CSO controls are listed in Table 12-1 and the elements of the LTCP are listed in Table 12-2. The major approach to CSO control, outlined in EPA's CSO Control Policy, is to:

- Eliminate CSOs to sensitive areas wherever possible (where not possible, provide treatment).

- Coordinate the review and revision of water quality standards with development of long-term CSO control plans.

- Evaluate a reasonable range of alternatives that could achieve the necessary level of control/treatment, and select the controls to be implemented based on cost/ performance evaluations.

- Develop an implementation schedule based on the relative impacts on WQS and designated uses, on the priority of projects identified in the LTCP, and on the permittee's financial capability.

- Maximize treatment of wet weather flows at the POTW.

Since the CSO Control Policy was published, EPA has released guidance documents on the following six implementation areas: long-term control plans, the nine minimum controls, screening and ranking, funding options, permit writing, and financial capability and schedule development (see the References section and/or the CSO Website (http://www.epa.gov/npdes/cso) for more information).

In the Consolidated Appropriations Act for Fiscal Year 2001, P.L. 106-554, Congress amended the Clean Water Act by adding Section 402(q) to require, among other things, that all permits, orders, and decrees issued to control CSOs, after enactment of the Consolidated Appropriations Act, shall conform to EPA's 1994 CSO Control Policy. EPA and State NPDES permitting authorities should refer to Section IV, Expectations for Permitting Authorities, of the Policy. This section of the policy presents the major elements that should be in NPDES permits to implement the Policy and ensure protection of water quality.

State and EPA NPDES permitting authorities continue to work with permittees to incorporate CSO conditions into NPDES permits and through other enforceable mechanisms, such as administrative or judicial orders.

Table 12-1

Nine Minimum CSO Controls

- Proper operation and regular maintenance programs for the sewer system and the CSOs
- Maximum use of the collection system for storage
- Review and modification of pretreatment requirements to ensure that CSO impacts are minimized
- Maximization of flow to the POTW for treatment
- Prohibition of CSOs during dry weather
- Control of solid and floatable materials in CSOs
- Establishment of pollution prevention programs
- Public notification to ensure that the public receives adequate notification of CSO occurrences and CSO impacts
- Monitoring to effectively characterize CSO impacts and the efficacy of CSO controls

Table 12-2

Elements of the Long-Term CSO Control Plan

- Characterization, monitoring, and modeling of the combined sewer system
- Public participation
- Consideration of sensitive areas
- Evaluation of alternatives
- Cost/performance considerations
- Operational plan
- Maximizing treatment at the existing POTW treatment plant
- Implementation schedule
- Post-construction compliance monitoring program

This page intentionally left blank.

12. B. CSO Inspection Procedures

Each municipality's specific CSO requirements will be contained in a NPDES permit, an enforcement order or a consent decree. CSO conditions will be specific to that permittee. However, the inspection of one CSS may involve visits to more than one municipality, depending on the configuration and possible shared responsibility for the system. Before conducting the inspection, the inspector should determine the authorities responsible for operation of the system and define the scope of the inspection. The inspector will obtain information to determine compliance in the following areas:

- CSO prevention during dry weather
- Implementation of the nine minimum CSO controls
- Adherence to a schedule for development, submission, and implementation of a Long-Term CSO Control Plan, including any interim deliverables
- Adherence to schedule for implementation of the CSO controls selected from the LTCP
- Elimination or relocation of overflows from identified sensitive areas, as defined in the approved LTCP
- Narrative, performance-based or numerical, water quality-based effluent limitations
- Monitoring program, including baseline information on frequency, duration, and impacts of CSOs

Preparation

As stated above, the requirements for CSO control will most likely be found in the NPDES permit, or in some cases, in an enforcement order, such as an Administrative Order or Judicial Order, or a Consent Decree. Inspectors should review the permit (and permit amendments) and other enforceable mechanisms (e.g., consent orders) issued to the permittee. The inspector should be aware that in some cases the CSSs and CSO structures (i.e., pump stations) may be permitted separately from the POTW. The inspector may find:

- Requirements to implement and document implementation of technology-based controls (i.e., nine minimum controls) by the date specified in the permit or enforceable mechanism.
- Requirement to submit a report documenting the implementation of the nine minimum controls; the report will usually be required within 2 years of permit issuance.
- Requirements for the development, submission, and implementation of the Long-Term CSO Control Plan. Where the permittee is in the phase of developing a LTCP, there will usually be a schedule for the development and submission of the plan, either in the permit or other appropriate enforceable mechanism. Where the permittee has completed a LTCP, there will be narrative requirements pertaining to the

implementation, operation, and maintenance of the selected CSO controls described in the LTCP. There will also be an implementation schedule for CSO controls either in the permit or in an appropriate enforceable mechanism.

- Water quality-based effluent limits for CSOs. Numeric limits may not be found in the initial permits when the permittee is developing or implementing its LTCP. Instead, there will be a requirement to immediately comply with applicable WQSs expressed in the form of a narrative limitation. Permittees that have completed and are implementing their LTCPs may have one of the following permit conditions for CSOs:

  - A maximum number of overflow events per year for specified design conditions

  - Minimum percentage capture of combined sewage by volume for treatment under specified design conditions

  - Minimum percentage reduction of the mass of pollutants discharged for specified design conditions

  - Other performance-based standards and requirements.

- Requirements to implement a post-construction compliance monitoring program. This will be required for permittees that have completed and are implementing their LTCPs.

- Requirement to re-assess overflows to sensitive areas. This will only be imposed in those cases where elimination or relocation of CSOs from sensitive areas were proven not to be physically possible or economically achievable.

- Conditions establishing requirements for maximizing the treatment of wet weather flows at the treatment plant.

Other documents that the inspector should review are any CSO reports submitted by the permittee. The permittee may have submitted information in response to a CWA Section 308 information collection request on CSOs. The permittee may have submitted CSO monitoring plans or a report characterizing its CSOs, a report documenting implementation of the nine minimum CSO controls, or a Long-Term CSO Control Plan. Other documents and/or information that should be reviewed, if available, include:

- citizen complaints
- correspondence
- Notices of Violation
- annual capacity reports
- facility reports describing CSO discharge points and overflow problems
- inspection reports
- noncompliance notification reports describing overflows (usually attached to DMRs)
- proximity of overflows to drinking water sources
- potential for impact to human health or the environment.
- list of significant industrial users and a map showing their connection to CSS and location of nearby CSOs.

Reviewing these permittee reports will help the inspector become knowledgeable about the permittee's specific CSO problems and existing CSO controls. The inspector should make copies of those documents that (1) establish enforceable CSO requirements, (2) provide evidence that an enforceable requirement has been violated or (3) provide evidence of environmental problems related to CSOs. The inspector should make sure that EPA has a complete copy of noncompliance notification reports for the last five years, indicating the date, time, duration, flow rate, cause, and actions to correct, prevent, and mitigate each overflow from the facility. The inspector should also have a map or other document that provides the location of each CSO discharge point and identifies the receiving stream to which the overflow discharges.

Onsite Records Review

The inspector should review the following CSO records:

- Log books, reports, or internal memos describing maintenance and operation activities concerning the sewer system and CSO outfalls
- CSO outfall flow records
- Monitoring data on CSOs, collection system, or receiving stream
- Records pertaining to installation of CSO controls
- Feasibility studies
- Capital project summaries (description and cost of each project).

Record keeping requirements vary by facility depending on the specific CSO controls the facility has selected and is implementing. If the permittee has submitted a report documenting implementation of the nine minimum CSO controls, the inspector should review appropriate records kept at the facility to verify the information in this report. Examples of possible records that might be kept to document the implementation of the nine minimum CSO controls are listed in Table 12-3. These examples are provided as illustrations and not requirements. The inspector should use the facility's permit or other enforceable document as a guide to determine what specific records the facility is required to keep and maintain. The facility's CSO Operations and Maintenance manual and CSO control plan can provide the inspector with insight into the specific types of records the facility would have.

Interviews

As with all of the NPDES compliance inspections, interviews with appropriate personnel with firsthand knowledge of CSO activities can be useful in obtaining factual information. The inspector should interview the person in the highest position of authority responsible for the day-to-day development or implementation of the LTCP. Other personnel, such as the collection crew or others involved in inspecting, operating, and maintaining CSOs or CSO

controls should also be interviewed. It is particularly important that the inspector obtain written statements (see Chapter Two) where personnel are providing information that is not or cannot be substantiated by the facility's records or the inspector's own observations.

If the facility is developing or implementing a LTCP, the inspector may want to interview those personnel responsible for that plan. Generally, the facility will be under a schedule with distinct activities and milestones established. This schedule may be in the permit, but will more likely be in an enforcement order. Any schedules submitted by the permittee in a report or in its LTCP should not be referred to, as these are not enforceable schedules. The inspector should focus on verifying those LTCP development or implementation activities that (1) the permittee has reported have been developed/implemented and (2) the permittee was required to have developed/implemented according to a schedule in the permit or enforcement order.

The following are examples of relevant questions that the inspector can use to obtain a general understanding of the facility. Other questions relevant to the specific nine minimum controls are listed in Table 12-4. The inspector should add to these questions based on the specific requirements in the facility's permit. For example, if the permit requires submission of a "CSO Characterization Report" within 180 days of the permit issuance, the inspector should request the report and verify whether or not the report was submitted within the established time frame.

- What type of technology is used to control CSO discharges? Describe regulator mechanisms used, including size, type, presence or absence of backflow devices, and location.
- How are overflows monitored and reported? What instrumantation is used? Is there any "real time" data collected? How quickly can an operator adjust flow? Remotely?
- Describe the system, identifying the older and new facilities that are used.
- What communities are served by the treatment plant?
- Is the collection system gravity fed or are pumps used? If pumping stations are used, how many are there and where are they located?
- What flows does the municipality receive from other municipalities? Are these upstream systems combined sewer systems or separate sanitary systems? What kinds of overflow problems have the upstream municipalities reported? What agreements are in place establishing which municipality has authority and duty to maintain various parts of the sewer system?
- How many overflows have occurred in the collection system, including contributing jurisdictions, within the last five years?
- What is the most common cause of overflows?
- Where are the potential CSO point discharges located? Are any located at pump stations? What receiving stream does each CSO discharge to?
- What is a typical monthly rate of CSO incidents?
- What samples have been taken of overflows? (Ask to see sample results.)
- What steps is the municipality taking to comply with the CSO requirements in its permit? If the municipality is planning to meet a different schedule than that required in the permit, what is its time line?

Facility Site Inspection

An inspection of the CSO outfalls should be included in a NPDES compliance inspection in order to get a complete picture of how the overall publicly-owned treatment works (wastewater treatment plant and collection system) is performing. This is especially true if the inspection's focus or one of its objectives to investigate compliance with CSO requirements. In such cases, an inspection of CSO structures, CSO treatment systems, or key areas of the collection system is necessary. If the intent of the inspection is to observe CSO treatment, it may be necessary to schedule this inspection during or immediately after a wet weather event. These outfalls would be located throughout the collection system and, therefore, may be several miles from the facility.

It is not necessary to inspect all of the CSO outfalls. The inspector can select a few either randomly or on the basis of location (closest to the plant) or other selection criteria. For example, the inspector may want to inspect those outfalls that treat solids and floatables to evaluate the operation and maintenance of the controls. The inspector might also select the largest (in discharge volume) outfalls, those that most frequently discharge (during wet weather), or those that are known to have an impact on water quality. Conversely, the inspector may want to select those outfalls that are subject to few inspections by the permittee.

If the inspector observes any dry weather CSO discharges, a photographic record should be made (see Chapter Two), and in depth interviews should be conducted and statements obtained from facility personnel.

Table 12-3

CSO Records

Nine Minimum CSO Controls	Examples of Records/Documentation
Proper operation and regular maintenance program	• Standard Operating Procedures, Operations and Maintenance Manual, or similar manual or plan • Log of sewer system cleaning, flushing, or debris removal • Log of repair or maintenance of regulators • Log of lift station malfunctions and repairs made • Log of preventive maintenance of interceptor lift stations and pumps • Work orders for corrective activities • Log of inspections of lift stations, sewer lines, and regulators
Maximum use of collection system for storage	• Hydraulic study of system and evaluation of alternatives to maximize wet weather flow storage capacity • Records of installation of in-line devices such as dams, regulators, and gates to retard flow • Installation of separate sanitary and storm water lines • Replacement of undersized pipes • Adjustment of regulator settings or upgrading/adjusting pumping rates at lift stations • Off-line temporary storage
Review and modification of the pretreatment program	• Inventory of nondomestic discharges • Assessment of significance of nondomestic discharges on CSO and receiving waters • Pretreatment controls to reduce/eliminate industrial contaminants during wet weather

Table 12-3

CSO Records (Continued)

Nine Minimum CSO Controls	Examples of Records/Documentation
Maximization of flows to the POTW for treatment	• Summary of analyses conducted • Maximum wet weather flow Wastewater Treatment Plant (WWTP) can receive without pass-through or interference • Description of modifications to be implemented
Prohibition of dry weather overflows (DWOs)	• Log of inspections of CSOs during dry weather and observations made during these inspections • Log of Dry Weather Overflow (DWO) reports submitted
Control of solids and floatable materials in CSOs	• Installation of screens or booms • Source control activities such as regular street cleaning, highly visible anti-litter programs
Pollution prevention	• Street sweeping, anti-litter campaigns
Public notification	• CSO outfalls are posted with signage • Date and proof of public notice, procedure (by newspaper, radio), public notice information
Monitoring of CSOs	• Identification of outfall locations (i.e., latitude and longitude or street address) • Number and location of overflow events including duration, volume, and pollutant loadings • Receiving stream data and impact (e.g., beach closings, fish kills) • Monitoring plan

Table 12-4

CSO Interview Questions

Nine Minimum CSO Controls	Examples of Interview Questions
Proper operations and regular maintenance program	• How often are CSO discharge locations inspected? Who conducts the inspections? What records do they keep? How is corrective action assured when a problem is discovered? How are the operability and reliability of regulators verified? • Do the pump stations have backup power? Is there any telemetric alarm warning system? Is any other type of redundancy built into the collection system to minimize the occurrence of overflows? • What is the municipality's budget for collection system operation? For collection system maintenance? How much was spent last year on collection system operation and maintenance? • How many people are dedicated to maintaining the collection system? • What improvements are planned? Are these projects funded? What is the process for funding capital improvements? • How are personnel trained? • How often is the Operations & Maintenance plan reviewed? When was the last revision?
Maximum use of collection system for storage	• What steps are taken to maximize use of the collection system for storage? (e.g., install dams, weirs, and regulators)
Review and modification of the pretreatment program	• When were the pretreatment requirements last reviewed to ensure minimization of CSO impacts from upstream Industrial Users? What changes have been made to the program to accomplish this goal? What percentage of total flow comes from nondomestic sources? How is the impact of untreated industrial pollutants from CSOs addressed in the pretreatment program?
Maximization of flows to the POTW for treatment	• What steps are taken to maximize flow to the POTW? • What are the bottlenecks in the sewer system? What facilities in the system are critical to the performance of the CSS? • What are the capabilities of major interceptors and pumping stations delivering flows to the treatment POTW? • How do wet weather flows to the POTW compare with dry weather flows? • How does the current total flow compare to the design capacity? • What, if any, unused treatment facilities are used to store wet weather flows?

Table 12-4

CSO Interview Questions (Continued)

Nine Minimum CSO Controls	Examples of Interview Questions
Prohibition of dry weather overflows (DWOs)	• What has the municipality done to eliminate dry weather overflows? • How does the municipality identify dry weather overflows? If inspections are used, how often are the inspections performed? • Describe the most recent cleaning, sewer repair, or regulator repair performed to alleviate a dry weather overflow. • How does the municipality determine which dry weather overflows could endanger health or the environment?
Control of solids and floatable materials in CSOs	• How does the municipality keep solids and floatables out of the CSO discharge? • If solids and floatables do reach the receiving waters, how does the municipality remove them?
Pollution prevention	• What pollution prevention measures (e.g., street cleaning, public education, waste collection or recycling) does the municipality take to keep contaminants from entering the sewer system?
Public notification	• How has the public been notified of the location of CSO discharge points? How does the municipality notify the public of overflow incidents? When was the last notification? • What is the internal mechanism for reporting sewage overflows? How does this information reach the permitting authority?
Monitoring of CSOs	• How does the municipality monitor CSOs? How does the municipality use this monitoring to characterize the impacts of CSOs? How does the municipality use this monitoring to evaluate the effectiveness of CSO controls? Does the municipality monitor CSO flow rates? • What information from other groups (e.g., Coast Guard or local volunteer groups) does the municipality collect on water quality or use of waters affected by CSOs (e.g., beach closings, fish kills, etc.)? • Which CSO receiving waters are the most sensitive? Why? (e.g., drinking water)

This page intentionally left blank.

12. C. References and Checklist

References

Federal Register. September 8, 1989. National CSO Control Strategy: Notice. Volume 54, No. 37370.

U.S. Environmental Protection Agency. 1993. *Manual: Combined Sewer Overflow Control*. Washington, D.C. EPA 625/R-93-007

Federal Register. April 19, 1994. *Combined Sewer Overflow Control Policy; Notice. Volume 59, No. 75*.

U.S. Environmental Protection Agency. September 1995. *Combined Sewer Overflows Guidance for Long-Term Control Plan.* EPA 832-B-95-002.

U.S. Environmental Protection Agency. May 1995. *Combined Sewer Overflows Guidance for Nine Minimum Control Measures.* EPA 832-B-95-003.

U.S. Environmental Protection Agency. September 1995. *Combined Sewer Overflows Guidance for Permit Writers.* EPA 832-B-95-008

U.S. Environmental Protection Agency. August 1995. *Combined Sewer Overflows Guidance for Screening and Ranking.* EPA 832-B-95-004

U.S. Environmental Protection Agency. August 1995. *Combined Sewer Overflows Guidance for Funding Options.* EPA 832-B-95-007

U.S. Environmental Protection Agency. March 1996. *The Enforcement Management System National Pollutant Discharge Elimination System (Clean Water Act) Chapter X: Setting Priorities for Addressing Discharges from Separate Sanitary Sewers.*

U.S. Environmental Protection Agency. Summer 1996. *Sanitary Sewer What are they and how can we reduce them?* EPA 832-K-96-001.

U.S. Environmental Protection Agency. 1997. *Combined Sewer Overflows Guidance on Financial Capability and Schedule Development.* EPA 832-B-97-004

U.S. Environmental Protection Agency. January 1999. *Combined Sewer Overflows Guidance For Monitoring And Modeling.* EPA 832-B-99-002

U.S. Environmental Protection Agency. April 2000. *Compliance and Enforcement Strategy for CSOs and SSOs.*

U.S. Environmental Protection Agency. June 2000. *Benefits of Protecting Your Community From Sanitary Sewer Overflows*. EPA 832-F-00-005.

U.S. Environmental Protection Agency. June 2001. *Evaluating POTW Capacity, Management, Operation, and Maintenance Pr*ograms.

U.S. Environmental Protection Agency. July 31, 2001. *Guidance: Coordinating CSO Long-term Planning with Water Quality Standards Reviews*. EPA-833-R-01-002.

CSO EVALUATION CHECKLIST

A. IDENTIFICATION OF CSOs

Yes No N/A	1. Are all CSO points identified?
Yes No N/A	2. Does facility have maps/schematics of Combined Sewer System (CSS) depicting location of all CSO discharge points?
Yes No N/A	3. Is each CSO discharge point located by longitude, latitude, and street address on appropriate maps?

B. DRY WEATHER OVERFLOWS

Yes No N/A	1. Are the locations of all dry weather CSOs known by permittee?
Yes No N/A	2. Does permittee have records of quantitative loads and flows on all dry weather CSO events?
Yes No N/A	3. Has notification been given to EPA/State of all dry weather CSO discharges?
Yes No N/A	4. Are there any unreported dry weather CSOs?

C. RECORDS

	1. Are the following records kept for CSO events?
Yes No N/A	• Location
Yes No N/A	• Frequency of discharge
Yes No N/A	• Flow magnitude
Yes No N/A	• Discharge pattern
Yes No N/A	• Total volume of discharge
Yes No N/A	• Duration of the event
Yes No N/A	• Pollutant characterization
Yes No N/A	• Correlation with rainfall records
Yes No N/A	• Specific causes of overflows
Yes No N/A	• Flow collected/flow diverted?
Yes No N/A	2. Are records of CSO flows maintained?
Yes No N/A	3. Are records accurate?

CSO EVALUATION CHECKLIST

D. OPERATION AND MAINTENANCE

Yes No N/A	1. Is there a CSS O&M manual and does it address O&M of CSO structures?
Yes No N/A	2. Does the facility conduct inspections of the CSS and CSO structures?
Yes No N/A	3. Are these inspections documented? Does documentation include results of various types of inspections, dates and times, corrective action taken if problems were found?
Yes No N/A	4. Is a log book of maintenance and repair on the CSS and CSO structures maintained? Does this note the type of problem (or indicate routine maintenance), repair made, or maintenance activity conducted, date?

E. COMPLIANCE SCHEDULES

	1. Is permittee meeting CSO compliance schedule for:
Yes No N/A	• Implementing nine minimum CSO controls?
Yes No N/A	• Developing LTCP?
Yes No N/A	• Implementing LTCP?
Yes No N/A	2. Has permittee requested an extension of time?

This page intentionally left blank.

13. SANITARY SEWER OVERFLOWS

Contents Page

A. Overview of SSOs 13-1

B. SSO Inspection Procedures 13-5
Preparation 13-5
Records Review 13-6
Interviews 13-7
Facility Site Inspection 13-8

C. References 13-11

List of Tables

13-1. Documents to Review 13-10

Related Websites

Office of Wastewater Management (OWM) Homepage: http://www.epa.gov/owm

This page intentionally left blank.

13. A. Overview of SSOs

In addition to materials in this chapter, inspectors must be familiar with Chapter 1 - "Introduction" & Chapter 2 - "Inspection Procedures".

Sanitary sewer collection systems are designed to remove wastewater from homes and other buildings and convey it to a proper treatment facility and disposal location. The collection system is critical to successful performance of the wastewater treatment process. EPA estimates that collection systems in the U.S. have a replacement value of $1 to $2 trillion. Under certain conditions, poorly designed, built, managed, operated, and/or maintained systems can pose risks to public health and the environment. These risks arise from sanitary sewer overflows (SSOs) from the collection system. SSOs are discharges of wastewater (including that combined with rainfall induced infiltration/inflow) from a separate sanitary sewer prior to treatment at the wastewater treatment plant. SSOs typically release untreated sewage into basements or out of manholes and onto city streets, playgrounds, and into streams.

Effective and continuous management, operation, and maintenance, as well as ensuring adequate capacity and performing rehabilitation, when necessary, are critical to maintaining collection system capacity and performance while extending the life of the system. Many sanitary sewer collection systems, however, have received minimal maintenance over the years resulting in deteriorated sewers with subsequent overflows, cave-ins, hydraulic overloads at treatment plants, and other safety, health, and environmental problems. As one of the most serious and environmentally threatening problems, sanitary sewer overflows are a frequent cause of water quality violations and are a threat to public health and the environment. Beach closings, flooded basements, closed shellfish beds and hydraulically overloaded wastewater treatment plants are some symptoms of collection systems with inadequate capacity and improper management, operations, and maintenance.

Even though separate sanitary sewer systems are designed to collect and transport all the sewage that flows into them, SSOs can still occur. Frequent SSOs typically indicate that something is wrong with the system. Problems contributing to SSOs include:

- **Deteriorating Sewer System:** Many sewer authorities neglect to plan and fund long-term sewer rehabilitation and replacement projects.

- **Infiltration and Inflow (I&I):** This involves too much rainfall or snowmelt infiltrating through the ground into leaky sanitary sewers, excess water inflowing through roof drains connected to sewers, broken pipes, or badly connected sewer service lines. Unlike combined sewers, sanitary sewers are not intended to collect or convey rainfall or to drain property.

- **Undersized Systems:** Sewers and pumps are too small to carry sewage from newly-developed subdivisions or commercial areas.

- **Pipe Failures:** Pipe failures result from blocked, broken or cracked pipes. Sections of pipe settle or shift so that pipe joints no longer match, sediment and other material build up causing pipes to break or collapse.

- **Pump Station Failures:** This results from pump failures, power failures, and inadequate wet well capacity.

- **Sewer Service Connections:** Discharges occur at sewer service connections to houses and other buildings.
- **Pipe Blockages:** Grease and tree roots are the primary causes of sewer blockages.
- **Vandalism and construction-related spills.**

From a compliance standpoint, Chapter X of the Enforcement Management System *Setting Priorities for Addressing Discharges from Separate Sanitary Sewers*, establishes a series of guiding principles and priorities for use by EPA Regions and National Pollutant Discharge Elimination System (NPDES) States in responding to separate sanitary sewer discharge violations. Chapter X states:

> "For a person to be in violation of the Clean Water Act: 1) a person must own, operate, or have substantial control over the conveyance from which the discharge of pollutants occurs, 2) the discharge must be prohibited by a permit, be a violation of the permit language, or not be authorized by a permit, and 3) the discharge must reach waters of the United States. In addition, discharges that do not reach waters of the United States may nevertheless be in violation of Clean Water Act permit requirements, such as those requiring proper operation and maintenance (O&M), or may be in violation of State law."

The exact use of language in a NPDES permit disallowing SSOs may vary from one facility to another (often depending on how a State NPDES permit authority contends with SSOs). Some permits explicitly prohibit overflows from the system and in other cases, where the permit may be silent, SSOs are treated as unauthorized discharges.

Systems have been found to be out of compliance because of overflows (even those that do not reach waters of the United States) that are the result of improper operation and maintenance. 40 *CFR* 122.41(e) requires, as a standard NPDES permit condition, that permitted wastewater owners or operators must "properly operate and maintain all facilities and systems of treatment and control (and related appurtenances) which are installed or used by the permittee to achieve compliance with the conditions of this permit."

Another standard permit condition regarding the duty to mitigate states that "the permittee shall take all reasonable steps to minimize or prevent any discharge... in violation of [the] permit which has a reasonable likelihood of adversely affecting human health or the environment." (40 *CFR* 122.41 (d)). This may be interpreted to include sanitary sewer overflow discharges.

Most permittees are required to report any noncompliance, including overflows that result in a discharge or that are caused by improper operation and maintenance. Most permits also require that any noncompliance, including overflows which may endanger the health or the environment be reported within 24 hours, and in writing within five days.

Since there are minor variations among permits regarding how to deal with overflows (except for the standard permit conditions which appear in all permits), the NPDES inspector should rely on the guidance in Chapter X of the EMS (part of which has been summarized above) and the Publicly Owned Treatment Work (POTW) NPDES permit for standards for evaluating compliance.

EPA has worked with State NPDES authorities to the extent possible to standardize language in permits regarding SSOs. However, a more uniform approach is being developed through a national rulemaking effort.

EPA has carefully considered the recommendations of the SSO Federal Advisory Subcommittee for regulatory and nonregulatory actions to reduce SSOs nationally and has developed draft proposed regulations regarding SSOs. The SSO Federal Advisory Subcommittee was organized to examine the need for national consistency in permitting and enforcement, effective sewer operation and maintenance principles, public notification for SSOs with potential health or environmental dangers, and other public policy issues. The draft regulations include provisions for the periodic self-auditing of capacity, management, operation, and maintenance (CMOM) programs; SSO prohibition language; recordkeeping, reporting and public notification requirements; criteria for remote treatment facilities; the inclusion of satellite collection systems in the scope of NPDES permitting; and watershed management principals.

At the end of March 2000, the SSO proposed rule package (also known as the CMOM proposed rule) was sent to the U.S. Office of Management and Budget for approval/comments. The Administrator signed the Notice of Proposed Rulemaking on January 4, 2001. In accordance with the memorandum of January 20, 2001, from the Administrator to President Clinton and Chief of Staff, entitled "Regulatory Review Plan," published in the Federal Register on January 24, 2001, 66 FR 7701, EPA has withdrawn this document from the Office of the Federal Register to give the Administrator an opportunity to review it. When the regulation is final, a regulatory scheme for the handling of SSOs will be phased in (over the following NPDES permit cycle) with some requirements taking effect upon publication in the Federal Register.

In the SSO proposed rule, EPA is proposing to clarify and expand NPDES permit requirements for municipal sanitary sewer collection systems and SSOs. The proposal includes standard permit conditions addressing capacity, management, operation and maintenance (CMOM) requirements; a prohibition on discharges (with a framework for a defense for unavoidable discharges); and requirements for reporting, public notification, and recordkeeping for municipal sanitary sewer collection systems and SSOs.

The Agency also is proposing a regulatory framework for applying NPDES permit conditions, including applicable standard permit conditions, to municipal satellite collection systems. Municipal satellite collection systems are sanitary sewers owned or operated by a municipality that convey sewage or industrial wastewater to a POTW that has a treatment plant owned or operated by a different municipality. These types of facilities do not typically have their own NPDES permit. Implementation of this proposal would improve the capacity, management, operation and maintenance of municipal sanitary sewer collection systems and improve public notice for SSO events, which would:

- Reduce health and environmental risks by reducing SSO occurrences and improving treatment facility performance

- Protect the nation's collection system infrastructure by enhancing and maintaining system capacity, reducing equipment and operational failures and extending the life of its components.

Among the significant issues that the proposed rule addresses is establishing a definition of Sanitary Sewer Overflow. The rule proposes that a sanitary sewer overflow is an overflow, spill,

release, or diversion of wastewater from a sanitary sewer system. SSOs do not include combined sewer overflows (CSOs) or other discharges from the combined portions of a combined sewer system. SSOs include:

- Overflows or releases of wastewater that reach waters of the United States

- Overflows or releases of wastewater that do not reach waters of the United States
- Wastewater backups into buildings that are caused by blockages or flow conditions in a sanitary sewer other than a building lateral. Wastewater backups into buildings caused by a blockage or other malfunction of a building lateral that is privately owned is not an SSO.

In addition, national standards for reporting SSO events will be clarified by the proposed rule. These include immediate notifications and followup reports within five days for SSOs (including overflows that do not reach waters of the United States) that may imminently and substantially endanger human health; and for SSOs that enter waters of the US, reporting on Discharge Monitoring Reports (DMRs). The permittee must also prepare an annual report of all overflows in the sewer system, including overflows that do not discharge to waters of the United States. The annual report must include the date, the location of the overflow, any potentially affected receiving water, and the estimated volume of the overflow.

By defining what is a Sanitary Sewer Overflow and standardizing reporting requirements, EPA hopes to clarify national standards thereby enhancing inspector's ability to evaluate a permittee's program.

13. B. SSO Inspection Procedures

During an inspection of a sanitary sewer system, the inspector will obtain information indicating whether the sewer authority is properly managing, operating, and maintaining its collection system and taking all feasible steps to stop sanitary sewer overflows. The inspection of one sanitary sewer system my involve visits to more than one municipality, depending upon the configuration and possible shared responsibility for the system. Before conducting the inspection, the inspector should identify the authorities responsible for operation of the system and define the scope of the inspection.

Preparation

In evaluating either a system with a past history of SSOs or a system in which overflows may not necessarily be documented, the compliance inspector will rely primarily on the permit as a starting point. The inspector should refer to standard permit language contained in the NPDES permit. The inspector should also review the permit for any overflow-related requirements specific to the system.

An enforcement order, consent decree, or other enforceable document might also indicate prohibition, notification, or special circumstance language. Often, the establishment of a sanitary sewer discharge control program is the result of an enforcement action against a system. The inspector should refer to the enforcement document (e.g., consent decree, order, or other settlement) for a compliance schedule for sanitary sewer discharge control programs.

The compliance inspector will be faced with obtaining information to determine compliance in the following areas:

NPDES Standard Conditions

- Proper operation and maintenance. Regulatory language at 40 *CFR* 122.41(e) states that: "The permittee shall at all times properly operate and maintain all facilities and systems of treatment and control (and related appurtenances) which are installed or used by the permittee to achieve compliance with the conditions of this permit." Poor operation and maintenance practices frequently lead to unpermitted discharges.

- Duty to mitigate. "The permittee shall take all reasonable steps to minimize or prevent any discharge... in violation of [the] permit which has a reasonable likelihood of adversely affecting human health or the environment." (40 *CFR* 122.41 (d)) These steps would include activities critical to the operation and maintenance of the system.

Notification Procedures

- In general, permits require that any noncompliance, including overflows that result in a discharge or that are caused by improper operation and maintenance, be reported at the end of each month with the DMR. At a minimum, permits typically require that overflow summaries include the date, time, duration, location, estimated volume, cause, as well as

any observed environmental impacts, and what actions were taken or are being taken to address the overflow.

- Most permits also require that any noncompliance, including overflows, which may endanger the health or the environment be reported within 24 hours, and in writing within five days. Examples of overflows which may endanger health or the environment include major line breaks, overflow events which result in fish kills or other significant harm, and overflow events which occur in environmentally sensitive areas.

Prohibition of Unpermitted Discharges

- Discharges to waters of the U.S. must be regulated by a NPDES permit. Any discharge from a location other than the effluent discharge point specified in the permit constitutes an unpermitted discharge. This includes dry weather overflows.

Records Review

Prior to the inspection, the inspector should review the permittee's DMRs, SSO notification reports submitted by the permittee, sewer overflow service calls, and other documents that may have relevant information (e.g., annual reports). The permittee may have submitted information in response to EPA Section 308 information requests on SSOs. As required by an enforcement action, the permittee may have submitted plans or a report characterizing its program to eliminate SSOs or a report documenting progress of its sanitary sewer discharge control programs or describing SSO discharge points and overflow problems. Other documents and information that should be reviewed, if available, include:

- citizen complaints
- correspondence
- Notices of Violation
- annual capacity reports
- inspection reports
- maps illustrating the proximity of overflows to drinking water sources
- potential for impact to human health and the environment.

Reviewing these reports in advance of the inspection will help the inspector become knowledgeable about the permittee's specific SSO problems, existing SSO controls, and/or plans to reduce or eliminate their SSO problems. The inspector should make copies of those documents that provide evidence of (1) any SSO occurring at the facility within the previous five years or (2) environmental problems related to SSOs at the facility. The inspector should make sure that EPA has a complete copy of the last five years of noncompliance notification reports, indicating the date, time, duration, flow rate, cause, and actions to correct, prevent, and mitigate each sewage overflow from the facility.

During the onsite records review, the types of records that the inspector should find at the facility include logs, reports, or internal memos describing maintenance and operation activities concerning the sanitary sewer system and SSOs. As in any NPDES evaluation, the inspector should review DMRs as well as monitoring results as reported by the laboratory that analyzed the data.

However, during inspections concerned with SSOs, the inspector might also request records pertaining to management, budget, and planning for sewer infrastructure improvements. The inspector might also want to review maps of the sanitary sewer system, indicating the locations of manholes, pump stations, etc. Consideration should also be given to the location of SIU connections and the possible effect of such industrial discharges could have when discharged untreated from a SSO. Table 13-1 contains a sample list of documents to review. Items have been arranged under headings for each of the four major components: Capacity, Management, Operations, and Maintenance. There is some overlap between the areas where an inspector would typically use some of the documents listed. For example, POTW flow records would be helpful in the section of the inspection report relating to operations and maintenance as well as capacity. As appropriate, the permittee should have as many of these records readily available as possible.

EPA is developing a CMOM guidance related checklist which will be available on the EPA website. Note, EPA has developed an inspection guide for collection systems which incorporates CMOM concepts, *Guide for Evaluating Capacity, Management, Operations, and Maintenance Programs for Sanitary Sewer Collection Systems*, EPA 300-B-00-014, September 2000.

Interviews

As with all NPDES compliance inspections, interviews with appropriate personnel are essential to understanding the context and meaning of the documents and records. In the case of SSO investigations, appropriate personnel would include people in the highest position of authority at the facility as well as those responsible for day-to-day operations, maintenance and/or oversight of crews such as the collection crew or others involved in inspecting, operating, and maintaining the system. It is particularly important that the inspector obtain written statements (see Chapter Two) where personnel are providing information that is not or cannot be substantiated by the facility's records or the inspector's own observations.

The following are examples of relevant questions that the inspector can use to obtain a general understanding of the facility.

- What is the capacity of the collection system? Is the capacity adequate? What measures have been taken to prevent SSOs?
- What flows does the municipality receive from other municipalities? What kinds of overflow problems have the upstream municipalities reported? What agreements exist to maintain various parts of the sewer systems?•What are the causes of overflows, where do they occur, and how are they documented and reported?
- Where are the potential SSO point discharges located? Are any located at pump stations? What receiving stream does each SSO discharge to?
- How many SSOs have occurred in the past five years? What is the plan to reduce/ eliminate SSOs?
- What are the SSO remediation policies and emergency Standard Operating Procedures (SOPs)?
- How does the authority identify and assess impact from nonmunicipally owned lateral lines?

- What preventive and response Best Management Practices (BMPs), such as containment, recovery, and minimization of impact to human health and the environment, are in place?
- How are personnel trained to manage and/or prevent SSOs, and what are current staffing levels?
- Are there any alarms or systems monitoring to alert you of an imminent SSO, and what are they?
- What are the goals of the authority's program for managing, operating, and maintaining the sanitary sewer conveyance system?
- What structural deficiencies have been identified in the system?
- What is the O&M schedule for replacement parts/equipment and collection system improvements?
- What studies have been performed of the authority's program for managing, operating, and maintaining the sanitary sewer collection system?

Facility Site Inspection

Previous chapters of this manual provide guidance on general procedures for performing compliance inspections and are a valuable source of information on such topics as entry, legal authority and responsibilities of the inspector. However, there are some issues with entry that are specific to CMOM inspections. The inspector should be aware that some collection system components may be on private property, and they must gain entry properly through the property owner.

After reviewing records of SSO incidents, the inspector should visit previously identified SSO locations. The field inspection of the collection system should be directed by information gathered on prior SSOs, noncompliance notifications, citizen complaints, State reports, municipal studies, etc. Locations where large or representative SSOs have occurred or where SSOs occur more frequently should have higher priority for field inspection. The inspector should review causes (e.g., evidence of illicit connections) and determine whether the situation that led to the spill has been adequately addressed.

Field sampling must be conducted according to approved EPA methodology discussed in other chapters and may include sampling of the discharge and/or the receiving stream. Field sampling may be useful in developing enforcement actions to address chronic or acute violations, and as such, must be conducted with strict adherence to 40 *CFR* Part 136 and chain-of-custody protocol.

The inspector is reminded to take appropriate safety precautions. Collection systems may present physical, biological, chemical, and atmospheric hazards. Safety equipment should include a hard hat, steel-toed boots, safety glasses, gloves and for those with prescription eyeglasses, eyeglass straps are very important. A flashlight is also useful for collection system inspections. Collection system operators typically deal with manhole cover removal and other physical activities. The inspector should refrain from entering confined spaces unless absolutely necessary and then, only with the proper personal protective (safety) equipment. In sewer collection systems, the two most common confined spaces are the underground pumping station and manholes. The underground pumping station is typically entered through a relatively narrow metal or concrete shaft via a fixed ladder.

This page intentionally left blank.

Table 13-1. Documents to Review

Capacity	Management	Operations	Maintenance
• Information relating to system capacity • Performance data • POTW Flow Records • Capital improvement projects (CIP) plan (including funding and planned improvements) • Collection system master plan • Infiltration/Inflow studies • I/I studies and evaluations (including programs for eliminating illegal connections).	• Organization chart(s) and chain of communication for reporting SSOs • Program goals • Management Policies and Procedures • Job descriptions • Staffing plans, crew assignments and schedules • Sewer Use Ordinance, Grease Control Ordinance • Legal authority establishing control of system equipment and its maintenance • O&M budget with cost centers for wastewater collection • Recent annual report if available • Procurement process • Information systems • Training plan • Training and certification records • Public education materials • Policy and procedures for trenching, confined space, lockout tagout, PPE • CMOM program audits • Methods to extend good collection systems management to any satellite communities discharging to the central system.	• Detailed maps/schematics of the collection system and pump stations (SIU location) • O&M manuals • Inspection strategy, forms, and records • SSO reports detailing location, receiving water, volume, cause, start and stop date and time, system component, corrective action, and actions to mitigate impacts • Safety manual • Emergency response plan/SOP (awareness, notification, training, and emergency response) • SCADA and other alarm system information • Materials management program • Vehicle management • Overall map of system showing facilities such as pump stations, treatment plants, major gravity • Odor and corrosion control strategy • Root control program • Sampling procedures • Industrial pretreatment oversight of the collection system.	• Routine reports regarding system O&M activities • Work order management system • Maintenance tasks and frequencies • Replacement parts inventory • Performance measures for inspection, cleaning, repair, rehabilitation sewers, and force mains • Preventive maintenance cleaning strategy • Problem diagnosis records • Repair, rehabilitation, replacement strategy for pipes and pump stations • Record of citizen complaints and emergencies (normal hours and after hours) • Notifications to public health agencies, NPDES authority, and other entities.

13. C. References

References

U.S. Environmental Protection Agency. March 7, 1995. *Memorandum: Enforcement Efforts Addressing Sanitary Sewer Overflows*.

U.S. Environmental Protection Agency. March 1996. *The Enforcement Management System National Pollutant Discharge Elimination System (Clean Water Act) Chapter X: Setting Priorities for Addressing Discharges from Separate Sanitary Sewers.*

U.S. Environmental Protection Agency. Summer 1996. *Sanitary Sewer Overflows: What are they and how can we reduce them?* EPA 832-K-96-001.

U.S. Environmental Protection Agency. November 1996. *Sanitary Sewer Overflow and Sanitary Sewer Operation, Maintenance, and Management Draft Unified Paper*.

U.S. Environmental Protection Agency. April 27, 2000. *Memorandum: Compliance and Enforcement Strategy Addressing Combined Sewer Overflows and Sanitary Sewer Overflows.*

U.S. Environmental Protection Agency. June 2000. *Brochure: Benefits of Protection Your Community from Sanitary Sewer Overflows.* EPA 832-F-00-005.

U.S. Environmental Protection Agency. January 2001. *Fact sheet: Why Control Sanitary Sewer Overflows?*

U.S. Environmental Protection Agency. January 2001. *Proposed Rule To Protect Communities From Overflowing Sewers*. EPA 833-01-F-001.

U.S. Environmental Protection Agency. June 2001. *Benefits of Protecting Your Community From Sanitary Sewer Overflows.* EPA 832-F-00-005.

U.S. Environmental Protection Agency Office of Compliance and Region 4. June 2001. *Evaluating POTW Capacity Management, Operation, and Maintenance Programs.*

U.S. Environmental Protection Agency. June 2001. *Fact sheet: (OECA/Region 4) Evaluating POTW Capacity, Management, Operation, and Maintenance Programs.*

U.S. Environmental Protection Agency. March 2002. *Case Study: Clearwater, Florida Abates Sanitary Sewer Overflows Using the EPA Region 4 Management, Operations and Maintenance Approach.* EPA 833-R-02-001.

U.S. Environmental Protection Agency. April 2002. *Fact Sheet: Asset Management for Sewer Collection Systems*. EPA 833-F-02-001.

This page intentionally left blank.

14. POLLUTION PREVENTION

Contents Page

A. Overview of Pollution Prevention 14-1
Pollution Prevention Goals 14-1
Waste Management Hierarchy 14-1
Pollution Prevention Benefits 14-4

B. Pollution Prevention Opportunity Assessment Procedures for Industrial Facilities 14-7
Preparation 14-8
Interview 14-9
Facility Site Visit 14-10

C. Pollution Prevention Opportunity Assessment Procedures For Municipal Wastewater Treatment Plants 14-15

D. References and Checklist 14-19
References 14-19
Pollution Prevention Checklist for Industry 14-21
Pollution Prevention Checklist for Municipal Wastewater Treatment Plants 14-26

List of Tables

14-1. Useful Facility Information to Conduct a Pollution Prevention Opportunity Assessment 14-13

List of Figures

14-1. Waste Management Hierarchy 14-5
14-2. Benefits of Pollution Prevention 14-6
14-3. Pollution Prevention Opportunity Assessment 14-12

Related Websites

Pollution Prevention (P2) Homepage: http://www.epa.gov/opptintr/p2home
EnviroSense: http://es.epa.gov/
Pollution Prevention Information Clearinghouse (PPIC):
http://www.epa.gov/opptintr/library/ppicindex.htm

This page intentionally left blank.

14. A. Overview of Pollution Prevention

Pollution prevention is a proactive environmental management approach for minimizing material and resource losses during production. Pollution prevention addresses all aspects of production processes from raw material usage and inventory procedures to waste management and utilities conservation. Management techniques that incorporate pollution prevention reduce or eliminate the generation of pollutants, wastes, and adverse ecological impacts through new approaches, material substitutions, and optimizing processes and operating procedures.

Pollution Prevention Goals

The goal of pollution prevention is to reduce pollution by eliminating or reducing waste. Pollution prevention is a multimedia approach that minimizes or eliminates pollutants released to land, air, and/or water without shifting pollutants from one medium to another. The Pollution Prevention Act of 1990 defines source reduction as:

> ...any practice which reduces the amount of a hazardous substance, pollutant, or contaminant entering any wastestream or otherwise released into the environment (including fugitive emissions) prior to recycling, treatment, or disposal; and any practice which reduces the hazards to public health and the environment associated with the release of such substances, pollutants, or contaminants.

Pollution prevention, therefore, represents a fundamental shift in approach away from the conventional reliance on waste treatment/disposal or "end-of-pipe" treatment to the active investigation of prevention techniques. Facilities can implement pollution prevention by:

- Modifying Equipment or technology
- Modifying process or procedure
- Reformulating or redesigning products
- Substituting of raw materials
- Improvements in housekeeping, maintenance, training, and/or inventory control.

Waste Management Hierarchy

A facilities pollution prevention program should eliminate or reduce the generation of pollutants and wastes at the source by carefully considering material usage, production processes, and waste management practices. The facility's pollution prevention program should identify opportunities for reducing the use of hazardous materials and waste generation or releases, as well as opportunities to protect natural resources by conserving and efficiently using energy and water.

The Pollution Prevention Act of 1990 includes a Waste Management Hierarchy that describes a comprehensive waste management program. The hierarchy assigns the highest priority to source reduction and places a decreasing level of preference on recycling, treatment, and disposal. To be most effective, a facility's pollution prevention program should focus on implementing source reduction. Where source reduction cannot be achieved, reuse and recycling projects should be implemented. If there is no feasible pollution prevention alternative, treatment and disposal should be used as a last resort. Figure 14-1 is a graphic representation of the waste management hierarchy. Each level of the hierarchy is described below.

Source Reduction

Source reduction refers to the use of materials, processes, or practices that reduce or eliminate the quantity and toxicity of wastes at the point of generation. By preventing waste the need for costly treatment and disposal is decreased. Source reduction can be achieved by substituting raw materials improving operating practices and changing processes and equipment.

- **Substituting Raw material:** Replacing hazardous materials with less hazardous (or less toxic) alternatives reduces releases to the environment of hazardous materials and wastes resulting from routine production processes and accidental spills. Examples of material substitutions include, but are not limited to, (1) substituting soy-based or water-based ink to replace solvent-based ink for printing, (2) using recycled paper instead of virgin stock, (3) replacing styrofoam packing materials with re-usable hard-pack plastic materials for shipping products, (4) eliminating trichloroethylene as a cleaning agent by substituting a caustic cleaner such as potassium hydroxide or sodium hydroxide, and (5) eliminating Freon® use.

- **Improving operating practices**: Improved operating practices can reduce waste generated from poorly developed standard operating procedures, inadequate training, and inefficient production scheduling. In the past, facilities developed operating practices that maximized production without taking into account factors such as raw material usage, waste disposal costs, and environmental impacts. Examples of improved operating practices include, but are not limited to, segregating waste, improving housekeeping, and establishing preventive maintenance, training, and outreach programs.

- **Modifying processes and equipment modifications**: In the long run, one of the most effective source reduction techniques may involve process and equipment modifications. Changes to processes and equipment present significant opportunities for source reduction and pollution prevention. Such modifications include using newer or more efficient equipment or redesigning a process so that less raw material is required, yet product quality is maintained.

Recycling

While source reduction prevents wastes from being generated, recycling turns by-products and wastes into reusable products. Recycling includes such practices as onsite or offsite recycling, materials exchange or reuse, and raw materials recovery.

- **Onsite/offsite recycling**: Both onsite and offsite recycling can help reduce dependence on expensive virgin materials by reusing spent materials.

- **Materials exchange or reuse**: A materials exchange system maximizes the use of a facility's excess raw materials and equipment. A system generally consists of a database for tracking the availability of excess materials by department (or whatever organizational unit is appropriate). In addition, a materials exchange system may include a communication link with the facility's supply system to alert stock clerks that excess items are on hand and should be used prior to purchasing new stock.

- **Materials recovery**: Some of the by-products and wastes generated during production can be recovered and sold as commodities. For example, waste acids that no longer meet the requirements of a final, critical cleaning process can be used in a secondary process that does not require the same level of cleanliness. Other examples of materials recovery as part of waste treatment are discussed below.

Waste Treatment

Unlike source reduction, waste treatment applies to wastes after generation. The goals of waste treatment technologies are to neutralize the waste, to recover energy or material resources, to render the waste nonhazardous, or to reduce the volume. Treatment technologies that enable material to be recovered include ion exchange, reverse osmosis, electrolytic metal recovery, and electrodialysis. Volume reduction through evaporation is an example of treatment. Although volume reduction decreases the amount of wastewater, the absolute quantity of hazardous or toxic waste released to the environment is not reduced. In addition, equipment for volume reduction requires a capital cost and energy costs.

Waste Disposal

Disposal should be considered only when all other options are exhausted. Disposal is considered the least favored waste management method because of the associated costs, liability, and environmental impacts. In addition, a limited number of permitted waste sites are available for disposing hazardous material, and many of these sites are approaching capacity. Also, waste transportation may pose hazards. Finally, recordkeeping and reporting requirements associated with disposing hazardous wastes are an additional burden that can be avoided through preventive measures, such as source reduction.

Pollution Prevention Benefits

Figure 14-2 summarizes the direct benefits of pollution prevention practices for facilities. Source reduction improves the potential for environmental compliance. Because penalties for environmental compliance are becoming increasingly severe, compliance is a top priority.

Implementing source reduction measures can also reduce costs associated with waste management. Costs reductions may be experienced in expenditures for raw materials, waste disposal, transportation, handling and storage, training, management overhead, and emergency response. By decreasing the amount of hazardous waste shipped offsite for disposal, the facility may also reduce the costs associated with tracking and filing paperwork required for hazardous waste manifests. Future costs, such as remediation activities, can also be avoided with source reduction activities.

In addition, source reduction will produce positive health and environmental benefits. By maintaining fewer hazardous or toxic materials onsite facilities reduce occupational hazards, and, therefore, improve worker health and safety. Creating a safer workplace may reduce the need for expensive health and safety protection devices. Also, insurance cost may be lowered. A safer workplace will also improve employee job satisfaction. Reducing hazardous materials usage also decreases the volume of toxic substances released to the environment from spills, leaks, and air emissions.

The indirect benefits of pollution prevention may be equally significant. One indirect benefit is reduced liability. The Resource Conservation and Recovery Act (RCRA) and Comprehensive Environmental Response, Compensation, and Liability Act (CERCLA) "cradle to grave" provisions stipulate that a generator remains responsible for all environmental damage resulting from its waste including damage that occurs after disposal. A pollution prevention program can generate goodwill in the community and workplace, enhance the facility's public image, and foster environmental awareness among employees.

Figure 14-1

Waste Management Hierarchy

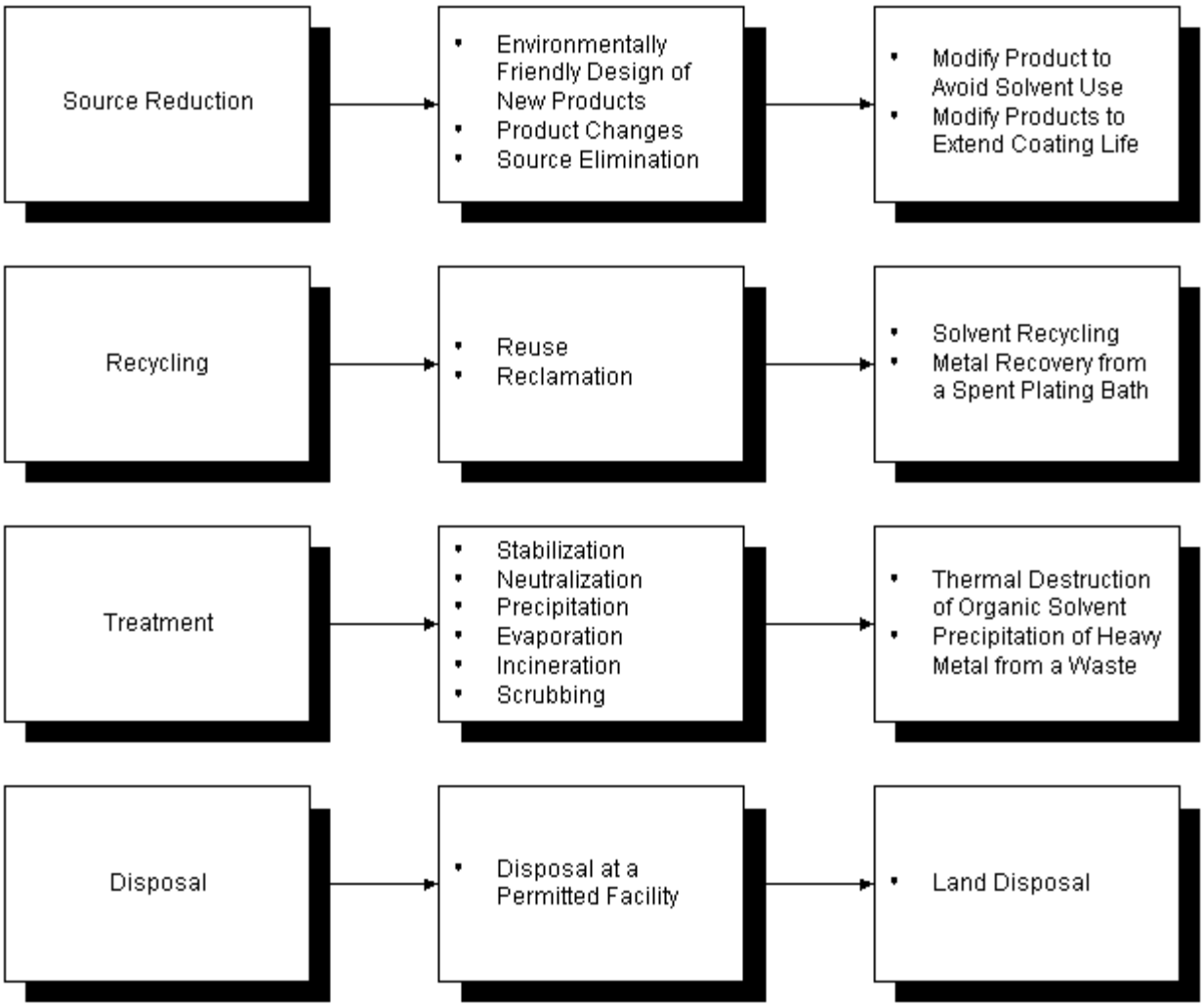

Figure 14-2

Benefits of Pollution Prevention

- Significantly reduces the amount of pollution released to the environment.
- Improves the potential for environmental and safety compliance.
- Improves worker health and safety by reducing occupational hazards.
- Provides the flexibility to choose cost-effective and environmentally sound solutions that will also result in improved efficiency and increased profit margins.
- Provides public recognition of a facility's efforts.
- Saves capital because of reductions in waste sent for costly treatment and disposal and because of decreased raw materials and energy usage.

14. B. Pollution Prevention Opportunity Assessment Procedures for Industrial Facilities

Because the primary objective of a routine National Pollutant Discharge Elimination System (NPDES) compliance inspection is to evaluate the facility's compliance with its NPDES permit requirements, a pollution prevention assessment incorporated into a compliance assessment may, by necessity, be limited. Nevertheless, the inspector can use these routine NPDES compliance inspections to identify pollution prevention options, particularly those options that would improve compliance. Alternatively, a facility visit may be conducted solely to evaluate the facility. In this instance, the general procedure for a facility visit is the same as that for any inspection (e.g., preparation, entry, opening conference, facility tour), but the specific focus is on identifying pollution prevention opportunities for the facility to investigate. Two reference documents the inspector may find useful are the *Waste Minimization Opportunity Assessment Manual* (EPA/625/7-88/003) and the *Facility Pollution Prevention Guide* (EPA/600/R-92/088). These documents contain procedures for conducting a pollution prevention opportunity assessment. Pollution prevention opportunity assessments have four phases: (1) planning and organization, (2) assessment, (3) feasibility analysis, and (4) implementation. The four phases are summarized in Figure 14-3.

The inspector cannot perform all the steps in the type of pollution prevention assessment described in the *Waste Minimization Opportunity Assessment Manual* (EPA/625/7-88/003) and in the *Facility Pollution Prevention Guide* (EPA/600/R-92/088). These documents were developed as guides for waste generators who want to implement a pollution prevention program. The feasibility analysis and implementation phases require development of criteria to screen and rank the options, conduct an in-depth technical assessment of options that can be successfully applied at that facility, conduct an economic evaluation, and the develop an implementation plan and schedule, which only the facility can determine. However, the inspector can evaluate whether the facility has conducted such an assessment and whether there are obvious pollution prevention opportunities.

It will be impossible, and unnecessary, for the inspector to have in-depth knowledge and understanding of all production processes and facility activities. However, as part of the entire pollution prevention assessment, whether during the preparation, interview, or facility site visit, the inspector should strive to become familiar with the facility layout, equipment and processes, points of potential waste generation, types of waste generated, and waste handling & disposal practices. If possible, the inspector should collect sufficient detailed information to develop a general flow diagram or material balance for each process step. The inspector should know the source, type, quantity, and concentration of each identified wastestream in order to identify data gaps, problem areas, and data conflicts.

As the assessment is conducted, the inspector should keep the pollution prevention principles in mind:

- Multimedia focus looking at all environmental media as a unified whole to avoid transfers from one medium to another

- Comprehensive evaluation of the total environmental impacts over the life cycle of the product, from raw materials through manufacturing (including energy use) to use and ultimate disposal.

Preparation

The inspector should prepare for the assessment by examining information about the processes, operations, and waste management practices at the facility. Any background material should be reviewed in the facility's file. If the inspection is planned to focus on pollution prevention assessment, the inspector should contact the facility to inform plant officials of this objective. During this initial contact, the inspector should ask for information that will help identify potential pollution prevention options. Table 14-1 provides a list of useful information for this assessment.

As the inspector reviews facility information, he or she should develop a list of questions specific to the facility. The inspector should be seeking, through the facility-specific questions, information to answer the following general questions:

- What significant wastestreams are generated by the plant? How much waste is generated?
- Why are these considered "waste"?
- From which processes or operations do these wastestreams originate?
- What is the production rate of each wastestream?
- Which wastes are hazardous and which are not? What makes them hazardous?
- How are the wastes managed at present?
- What are the input materials used that generate the wastestreams of a particular process or plant area?
- How efficient is the process? How much input material is:
  - Used in a process?
  - Released to water or air, or disposed of on land?
  - Destroyed or unaccounted for?
- What types of process controls are used to improve process efficiency?
- Are unnecessary wastes generated by mixing otherwise recyclable or recoverable hazardous wastes with other process wastes?

- What types of housekeeping practices are used to limit the quantity of wastes generated?

- Has the plant developed a Pollution Prevention Plan or strategy?

There are numerous documents that identify pollution prevention techniques for specific types of industry, such as the metal finishing industry, the fabricated metal products industry, and the pharmaceutical industry. These documents and other pollution prevention information can be obtained from:

- Pollution Prevention Information Clearinghouse (PPIC)

  - Guidance and information on Pollution Prevention Opportunities, (202) 566-0799, (202) 566-0794 (fax)

- Technology Transfer and Support Division [formerly Center for Environmental Research Information (CERI)]

  - Guidance and Information on Environmental Protection Programs, Publications Unit, U.S. EPA, 26 West Martin Luther King Drive, Cincinnati, OH 45268, (513) 569-7578, (513) 569-7585 (fax)

Interview

Just as with a routine NPDES compliance inspection, plant personnel should be interviewed when the inspector first arrives at the facility. The inspector should target personnel from the following areas:

- Management
- Environmental waste management
- Process engineering
- Facility maintenance
- Operation and production
- Safety and health
- Research and development
- Quality control
- Purchasing/inventory
- Shipping/receiving
- Storage.

From the interviews, the inspector should develop (or verify) a list of all waste minimization practices already in place. The inspector should also ask plant personnel for the plant's Pollution Prevention Plan or strategy and any suggested pollution prevention opportunities in the operations and processes and discuss with the plant personnel any pollution prevention opportunities that were identified during preparations for the site visit or during the onsite interviews.

Facility Site Visit

Again, as with a routine compliance inspection, the inspector should conduct a tour of the facility with plant personnel after the interview. The same areas of the manufacturing facility, materials and waste storage, loading and unloading, and treatment system should be reviewed. At each process area, the plant personnel most knowledgeable about the activity should describe the process or should answer any questions the inspector may have.

The inspector should make personal observations, seek confirmation of the interpretation of an activity that is occurring, and investigate any information plant personnel provide that appears to contradict what is being observed. The inspector should focus on:

- Loading and unloading operations
- In-plant transfers (raw materials handling)
- Process operations
- Housekeeping practices
- Maintenance activities
- Waste management operations.

The inspector should also check for signs of spills or leaks and assess overall cleanliness of the site. Throughout all the areas visited, the following wastestreams should be evaluated:

- Wastewater
- Air emissions, including stack and fugitive emissions (e.g., detectable odors and fumes)
- Hazardous wastes
- Nonhazardous solid wastes.

Each wastestream should be reviewed to:

- Determine whether the wastes are hazardous or nonhazardous
- Determine other physical and chemical characteristics of wastes and emissions
- Determine actual points of generation
- Determine quantities including variations
- Identify all handling, treatment, and storage procedures onsite.

Based on activities described above during a facility tour, the inspector should look for pollution prevention opportunities in the following general areas:

- Substituting less hazardous materials such as:

  - Using latex or water-based paints, rather than oil-based
  - Eliminating organic solvent cleaners and replacing with aqueous cleaners.

- Limiting the amount of hazardous materials disposed of by:

  - Buying only the amount of material the facility needs
  - Using all materials before their expiration date
  - Using only the amount of material needed

- Sharing materials or donating extra materials to community organizations.

- Using and storing products carefully to prevent:

  - Accidents and spills
  - Mixtures of incompatible materials that can react, ignite, or explode.

- Recycling wastes, such as:

  - Used oil
  - Plastics, glass, paper, and metals
  - Spent solvents.

- Generating less pollution by:

  - Automating and improving process controls to optimize production operations
  - Allowing products to fully drain process chemicals before rinsing
  - Using less toxic materials (e.g., printing inks, dyes)
  - Adjusting production schedules to minimize cleanup operations
  - Sealing floor drains (permanently or temporarily) to prevent spills
  - Segregating wastes to support recycling (e.g., scrap metals, solvents).

- Turning waste products into new materials by:

  - Treating and recycling rinse waters
  - Recovering metals such as silver from waste materials
  - Recycling waste lubricants and coolants.

- Using fewer resources by:

  - Installing flow restrictors on rinse waters
  - Installing high efficiency boilers and furnaces
  - Using heat exchangers to heat process water supplies.

- Educating employees on the:

  - Goals of pollution prevention and waste management
  - Procedures to follow for waste disposal and pollution prevention
  - Accomplishments for the pollution prevention program being implemented.

Before leaving the facility, the inspector should meet with plant personnel. A list of pollution prevention options identified during the site visit should be prepared and discussed with plant personnel. Inspectors can discuss a pollution prevention technology or refer the facility representatives to EPA or State pollution prevention technical assistance offices. However, the inspector should not recommend specific measures to implement. Nor should the inspector suggest particular products or imply that a certain pollution prevention measure will enable the facility to achieve compliance.

Figure 14-3

Pollution Prevention Opportunity Assessment

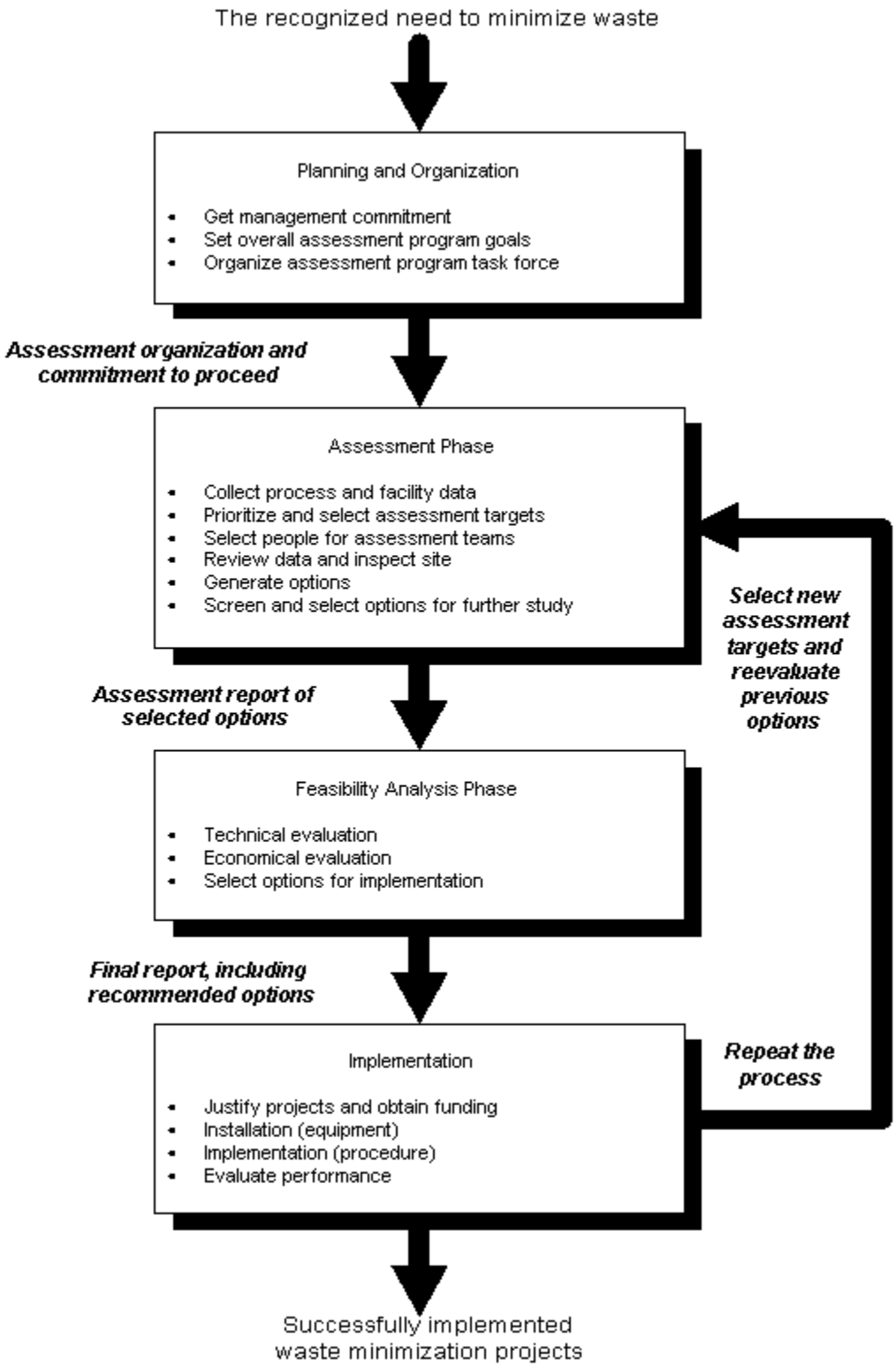

Table 14-1

Useful Facility Information to Conduct a Pollution Prevention Opportunity Assessment

Raw Materials Information

- Product composition
- Material Safety Data Sheets
- Product and raw material inventory and purchasing records
- Operator data logs
- Production schedules and records

Manufacturing Process Information

- Process flow diagrams
- Material and heat balances for production
- Manufacturing and pollution control processes
- Operating manuals and process descriptions
- Water usage rates
- Equipment and equipment specifications
- Piping and instrument diagrams
- Sewer layout diagrams
- Facility layout and elevation plans
- Equipment layouts and work flow diagrams

Waste Generation and Disposal Information

- Environmental permits—air emissions, solid waste, hazardous waste, NPDES, pretreatment
- RCRA information—manifests, annual reports
- Location of all wastewater, solid and hazardous waste collection, treatment, and storage points
- Diagram of air, wastewater, and/or hazardous waste treatment units
- Operating manuals for treatment units
- Emissions inventories [air, NPDES Discharge Monitoring Reports (DMRs), etc.]
- SARA Title III—Section 313 release reports
- Previous regulatory violations

This page intentionally left blank.

14. C. Pollution Prevention Opportunity Assessment Procedures For Municipal Wastewater Treatment Plants

The Municipal Water Pollution Prevention (MWPP) program promotes the application of pollution prevention concepts of the Pollution Prevention Act to Publicly Owned Treatment Works (POTWs). Pollution prevention can reduce the need for substantial capital investment in new infrastructure, enhance worker safety, improve the usability of sludge, and reduce operation and maintenance costs. Practices that stress a preventive approach to water pollution abatement include the following:

- Mechanisms for routine assessments of the compliance status of POTWs. This mechanism should include an early warning system based on periodic self-audits and quantitative techniques for assessing the condition of municipal wastewater treatment systems.
- Reporting processes on the capability of POTWs to sustain compliance.
- Processes for identifying, implementing, and tracking corrective actions to prevent pollution and maintain compliance.
- Program that will encourage POTWs to develop pollution prevention projects.

Pollution prevention practices POTWs can adopt could focus in the areas of:

- Improved operation and maintenance
- Projects that reduce wastewater flows and pollutant loadings
- Energy and water conservation
- Timely planning and financing for future needs and economic growth prior to occurrence of wastewater permit violations
- Toxicity reductions at the source (industrial pretreatment, commercial and residential source reduction programs)
- Recycling
- Proper treatment of wastes
- Beneficial uses of sludge.

Specific opportunities for optimizing each unit operation to maximize removal efficiency may include unit modifications to improve performance. For example:

- Clarifiers — Baffle installations and weir modifications to improve hydraulics and limit short circuiting.

- Aeration basins — Baffles to limit short circuiting. Fine bubble diffusers to improve aeration. Use of automatic controls to optimize aeration and limit over-aeration.

- Aerobic digester — Recover energy from gas. Insulate digester.

At any time, but especially during upgrading and expansion, the following pollution prevention projects could be considered:

- Install high efficiency pumps, motors and drives.

- Use biological- rather than chemical-based treatment.

- Install equalization basins to improve efficient operation of downstream units and minimize the need for oversize units.

- Design plant layout to minimize the need for intermediate pumping.

- Consider ultraviolet or ozone disinfection instead of chlorine.

- Digest residuals rather than heat or chemical treat.

- Select dewatering equipment not only to maximize solids but to minimize the need for chemical feeds that increase the volume of residuals.

- Evaluate toxicity of all lubricants, solvents, or cleaners, and replace them with less toxic alternatives such as citrus-based cleaners wherever possible.

- Reduce infiltration/inflow, which will result in several benefits:

  – Reduces plant expansion needs

  – Improves performance efficiency

  – Reduces grit (which increases equipment wear and breakage and is a disposal problem).

The Industrial Pretreatment Program is one of the best opportunities to achieve pollution prevention. It represents source control. Pollution prevention programs or projects aimed at residential and commercial users can also reduce loadings. Such pollution prevention programs could:

- Encourage water conservation

- Provide information on compatible or biodegradable cleaners to replace more toxic cleaners (for example, identify an alternative to chlorine-based "hang-in" type toilet bowl cleaners)

- Encourage composting instead of garbage grinders

- Enforce a commercial oil and grease ordinance requiring installation, operation, and maintenance of grease traps and recovery and recycle of oil and grease
- Discourage oil and grease dumping
- Prohibit disposable diaper flushing.

The POTW could also work with water utilities or agencies involved in establishing plumbing codes to reduce the metals (zinc, copper, and lead) found in drinking water supplies. These metals may be present because the water is corrosive to the pipes and leaches the metals from copper tubing, zinc-coated iron and steel pipes, and lead solder. The water utility may also be using water conditioning chemicals that contain metal salts.

The protocols for conducting a pollution prevention assessment at municipal wastewater treatment plants are similar to those for an industrial facility. The protocols of a Compliance Evaluation Inspection (CEI) are also appropriate, except that the focus during the interview, file review, and site visit is on identifying pollution prevention opportunities.

This page intentionally left blank.

14. D. References and Checklist

References

U.S. Environmental Protection Agency. July 1988. *Waste Minimization Opportunity Assessment Manual*. EPA/625/7-88/003.

U.S. Environmental Protection Agency. *Facility Pollution Prevention Guide*. EPA/600/R-92/088.

University of Tennessee. *Waste Reduction Assessment and Technology Transfer (WRATT) Training Manual*, 2nd Edition.

Municipal Water Pollution Prevention Program. March 1991. 21W-7002.

This page intentionally left blank.

POLLUTION PREVENTION CHECKLIST FOR INDUSTRY

A. GENERAL

Yes No N/A	1. Is there a written facility policy regarding pollution prevention?
Yes No N/A	2. Is there a pollution prevention program currently in place?
Yes No N/A	3. Is there a specific person assigned to oversee the success of the program?
Yes No N/A	4. Are there management/employee initiatives and incentive programs related to pollution prevention?
Yes No N/A	Quality circles (free forums between employees and supervisors) to identify pollution prevention options?
Yes No N/A	Opportunities for employee suggestions on pollution prevention options?
Yes No N/A	5. Has the facility previously conducted a pollution prevention assessment?
Yes No N/A	6. Has the facility used better cost accounting and cost allocation to provide incentives to reduce wastes or resource consumption?
Yes No N/A	Is cost accounting performed accurately for all process areas and wastestreams?
Yes No N/A	Are utility costs (energy, water) and waste treatment and disposal costs allocated to the operations that generate the waste?

B. STORAGE AREAS

Yes No N/A	1. Are there designated material storage areas?
Yes No N/A	2. Are storage areas clean and organized?
Yes No N/A	3. Are containers stored in such a way as to allow for visual inspection for corrosion and/or leaks?
Yes No N/A	4. Are containers stacked in a way to minimize the chance of tipping, puncturing, or breaking?
Yes No N/A	5. Are there adequate distances from incompatible chemicals and different types of chemicals to prevent cross-contamination?
Yes No N/A	6. Is one person responsible for maintaining storage areas?
Yes No N/A	7. Does the layout of the facility result in minimizing traffic through material storage areas?
Yes No N/A	8. Are stored items protected from damage, contamination, and exposure to weather?
Yes No N/A	9. Are all storage tanks routinely monitored for leaks?
Yes No N/A	10. Is containment, such as a curb or dike, installed in storage areas to contain leakage and to minimize the area contaminated by a spill?

POLLUTION PREVENTION CHECKLIST FOR INDUSTRY
(Continued)

B. STORAGE AREAS (Continued)

Yes No N/A	11. Are leak detection systems installed for underground storage tanks?
Yes No N/A	12. Are floating-roof tanks used for VOC control?
Yes No N/A	13. Are conservation vents used on fixed roof tanks?
Yes No N/A	14. Does the facility use vapor recovery systems?

C. MATERIALS INVENTORY

Yes No N/A	1. Is there an inventory control system designed to prevent materials from deteriorating in storage (first in, first out to prevent expiration)?
Yes No N/A	2. Is obsolete raw material returned to the supplier?
Yes No N/A	3. Does the facility try to order smaller containers of infrequently used materials to avoid disposing of large quantities of unused obsolete materials?
Yes No N/A	4. Has the facility tried to order larger containers of frequently used materials to reduce the number of small containers that must be cleaned and disposed of?
	5. Does the facility use or maintain:
Yes No N/A	Hazardous chemicals inventory lists?
Yes No N/A	Material safety data sheet files?
	6. Are all in-plant containers of hazardous chemicals labeled, tagged, or marked with:
Yes No N/A	Identity of the hazardous chemical(s)?
Yes No N/A	Appropriate hazard warnings?
Yes No N/A	7. Has the facility reexamined its need for each raw material?
Yes No N/A	8. Does the facility have a way to use off-spec material, where possible?

D. MATERIAL HANDLING

Yes No N/A	1. Are raw materials tested for quality before being accepted from suppliers?
Yes No N/A	2. Does the facility follow proper procedures when transferring materials?
Yes No N/A	3. Are expired materials tested for effectiveness before being disposed of?
Yes No N/A	4. Are drums, packages, and containers inspected for damage before being accepted?
Yes No N/A	5. Are containers properly resealed after use?

POLLUTION PREVENTION CHECKLIST FOR INDUSTRY (Continued)

D. MATERIAL HANDLING (Continued)

Yes No N/A	6. Are containers emptied thoroughly before cleaning or disposal?
	7. Does the facility segregate its wastes as much as possible?
Yes No N/A	Solid wastes from aqueous wastes?
Yes No N/A	Nonhazardous from hazardous?
Yes No N/A	Segregated according to type of contaminant?
Yes No N/A	Different types of solid waste to improve recycling/reuse?
Yes No N/A	Different types of solvents, cleaner wastes, and lubricants (e.g., organic solvents from mineral oils)?

E. PROCESS OPERATIONS

Yes No N/A	1. Are water conservation measures, recycling, and reuse techniques practiced in processes that use water or generate a wastewater (e.g., cleaning and rinsing operations)?
Yes No N/A	2. Has material substitution been tried for any hazardous materials used in process?
Yes No N/A	3. Have any techniques been used to increase the life of any process baths?
Yes No N/A	4. Are any wastes being recycled, reused, or recovered in some manner?
Yes No N/A	5. Have any equipment or process modifications been made to increase material use efficiency and thus reduce material waste generation?
Yes No N/A	6. Do processes employ any detectors to alert personnel of malfunctions that could produce/generate excessive wastes?

F. SPILLS AND LEAKS

	1. When a spill occurs, what cleanup methods are employed?
Yes No N/A	2. Would different cleaning methods allow for direct reuse or recycling of the water?
Yes No N/A	3. Are there preventive maintenance procedures designed to reduce incidents of equipment breakdowns, inefficiency, spills, or leaks?

G. MATERIAL SUBSTITUTION

Yes No N/A	1. Could the facility modify or completely change a given process to use water-based coolants and fluids instead of oil-based fluids?

POLLUTION PREVENTION CHECKLIST FOR INDUSTRY
(Continued)

H. SOLVENT USE

	1. Can solvent cleaning be replaced with less toxic cleaning, such as:
Yes No N/A	A dry process (e.g., bead or sand blasting or other abrasives)?
Yes No N/A	Steam cleaning?
Yes No N/A	Cryogenic?
Yes No N/A	Caustic cleaning?
Yes No N/A	2. Are non-chlorinated solvents substituted for chlorinated solvents?
Yes No N/A	3. Are parts wiped to remove oil and dirt prior to solvent cleaning?
Yes No N/A	4. Is the loss of cleaning ability of the solvent monitored before the solvent is replaced?
Yes No N/A	5. Are chemicals reused or recycled?
Yes No N/A	6. Is an onsite distillation unit for solvent recovery and reuse installed?
Yes No N/A	7. Is solvent use standardized?

I. RINSE WATERS

Yes No N/A	1. Have excessive rinses been evaluated and eliminated?
Yes No N/A	2. Is rinse water reclaimed, pretreated, and reused?
Yes No N/A	3. Are water softeners used only where necessary?

J. TRAINING

Yes No N/A	1. Are there formal personnel training programs on raw material handling, spill prevention, proper storage techniques, and waste handling procedures?
Yes No N/A	2. Are employees trained in pollution prevention techniques?
	3. How often is training given and by whom?

K. GOOD OPERATING PRACTICES

Yes No N/A	1. Are plant material balances performed routinely?
Yes No N/A	2. Are they performed separately for each material of concern?
Yes No N/A	3. Are records kept for each waste, documenting sources of origin and eventual disposal?
Yes No N/A	4. Are operators provided with detailed operating manuals or instruction sets?
Yes No N/A	5. Are all operator job functions well defined?

POLLUTION PREVENTION CHECKLIST FOR INDUSTRY
(Continued)

K. GOOD OPERATING PRACTICES (Continued)

Yes No N/A	6. Are regularly scheduled training programs offered to operators?
	7. Has the facility integrated pollution prevention into supervision and management by:
Yes No N/A	Closer supervision to improve production efficiency and reduce inadvertent waste generation (increased opportunity for early detection of mistakes)?
Yes No N/A	Management By Objectives (MBO) with defined and achievable goals for waste minimization (better coordination among the various parts of an overall operation)?
Yes No N/A	Scheduling production to minimize cleaning frequency?
	8. Has the facility improved production scheduling and planning to include:
Yes No N/A	Maximizing batch sizes?
Yes No N/A	Dedicating equipment to a single product?
Yes No N/A	Altering batch sequencing to minimize cleaning frequency?
Yes No N/A	9. Is corrective maintenance practiced, such as resetting control valves or adjusting process temperatures, to increase efficiency and to prevent raw material loss through wastestreams?
Yes No N/A	10. Does the facility forbid operators to bypass interlocks and alarms, or to significantly alter set points without authorization?
Yes No N/A	11. Are overflow or malfunction alarms installed on tanks and equipment?

L. HOUSEKEEPING PRACTICES

	1. Good housekeeping is the maintenance of a clean, orderly work environment. Does the facility:
Yes No N/A	Maintain neat and orderly storage of chemicals?
Yes No N/A	Promptly remove spillage?
Yes No N/A	Maintain dry and clean floors by use of brooms and/or vacuum cleaners?
Yes No N/A	Provide proper walkways with no containers protruding into walkways?
Yes No N/A	Minimize the accumulation of liquid and solid chemicals on the ground or floor?
Yes No N/A	Stimulate employee interest in good housekeeping?

Checklist derived from Waste Reduction Assessment and Technology Transfer (WRATT) Training Manual, 2nd Edition, University of Tennessee

POLLUTION PREVENTION CHECKLIST FOR MUNICIPAL WASTEWATER TREATMENT PLANTS

A. AGE

	1. What year was the wastewater treatment plant constructed or the last major expansion to increase the capacity of the plant completed?
	2. What sewer system improvements does the municipality have under consideration for the next 10 years?
	3. What is the expected community and industrial growth?
Yes No N/A	4. Is there any major development (industrial, commercial, or residential) anticipated in the next 2 to 3 years, such that either the flow or pollutant loadings could significantly increase?

B. TREATMENT EFFICIENCY

	1. Compare influent actual flow to influent design flow. When will actual hydraulic loading exceed design?
Yes No N/A	Has the plant initiated expansion plans and financing sufficiently in advance to avoid overloading?
Yes No N/A	Has the plant investigated measures for reducing flow?
	2. Compare conventional pollutant loadings (BOD, TSS, ammonia, phosphorus) to design loadings. When will actual loadings exceed design?
Yes No N/A	Has the plant initiated expansion plans and financing sufficiently in advance to avoid overloading?
Yes No N/A	Has the plant investigated measures for reducing loadings?
	3. Review operating records. How many months were the effluent concentrations or loadings above 90 percent of the permit limits?
____ Mo.	BOD?
____ Mo.	COD?
____ Mo.	Fecal coliform?
____ Mo.	Other conventional pollutants limited by permit (ammonia, phosphorus)?
____ Mo.	Metals or other toxics?
	4. How many times were permit limits violated (in the last year)?
	5. What types of violations have occurred in the last 5 years?
Yes No N/A	Are any of a recurrent nature?
	What were the causes?
Yes No N/A	Have effective solutions been implemented to prevent future recurrence?

POLLUTION PREVENTION CHECKLIST FOR MUNICIPAL WASTEWATER TREATMENT PLANTS (Continued)

B. TREATMENT EFFICIENCY (Continued)

Yes No N/A	6. How many bypasses have occurred? What were the causes? Have effective solutions been implemented to prevent future recurrence?
Yes No N/A	7. What are the future regulatory or permit requirements that may require modifications to the plant or its operations? Can the facility currently meet any future anticipated water quality standards or effluent discharge limits?
Yes No N/A	8. Has the plant investigated ways to maximize operating efficiency?
Yes No N/A	9. Has the plant investigated improvements to the chlorination system to decrease chlorine usage?

C. SLUDGE

Yes No N/A	1. Does the plant have sufficient sludge treatment, storage, and disposal capacity?
Yes No N/A	2. What percentage of the methane gas is captured and used? Has the plant investigated ways to increase the amount of gas captured and used?
Yes No N/A	3. Has the plant investigated ways to decrease the amount of dewatering chemicals used?

D. COLLECTION SYSTEM

	1. How many overflows within the collection system have occurred?
Yes No N/A	2. How many backups at any point in the collection system have occurred for any reason? What were the causes? Have effective solutions been implemented to prevent future recurrence?
Yes No N/A	3. Has the plant investigated ways to decrease infiltration/inflow?

E. PREVENTIVE MAINTENANCE PROGRAM

Yes No N/A	1. Does the plant have a written preventive maintenance program on major equipment items and the sewer collection system?
Yes No N/A	2. Does the preventive maintenance program depict frequency of intervals, types of lubrication, types of repair and other preventive maintenance tasks necessary for each piece of equipment or each section of the sewer?

POLLUTION PREVENTION CHECKLIST FOR MUNICIPAL WASTEWATER TREATMENT PLANTS (Continued)

E. PREVENTIVE MAINTENANCE PROGRAM (Continued)

Yes No N/A	3. Are these preventive maintenance tasks, as well as equipment and sewer collection problems being recorded, filed, and reviewed so future maintenance problems can be assessed properly?

F. MATERIALS USAGE

Yes No N/A	1. Has the plant identified all supplies used in the operation and maintenance of the plant?
Yes No N/A	2. Has the plant identified materials that could be substituted for less toxic materials?
Yes No N/A	3. Does the plant reuse or recycle any materials used?
Yes No N/A	4. Has the plant investigated ways to reduce chemical usage without compromising preventive maintenance or treatment?

G. PERSONNEL RESOURCES

	1. Review personnel resources, training, and certifications.
Yes No N/A	Are there sufficient numbers?
Yes No N/A	Do all have appropriate certifications and periodic training?
Yes No N/A	Do all personnel certifications meet or exceed required levels?
	How many are below the required level?
Yes No N/A	Is staffing level equal to or does it exceed O&M Manual recommendations?
	2 What percentage of the wastewater budget is dedicated for training?

H. FINANCIAL

Yes No N/A	1. Are the funds for the plant separate from other municipal funds?
Yes No N/A	2. Are funds sufficient for adequate operations?
Yes No N/A	3. Are funds sufficient for adequate preventive maintenance?
Yes No N/A	4. Are funds available for necessary improvements, expansion?
Yes No N/A	5. Is there a capital improvement fund?
Yes No N/A	6. Is the equipment replacement fund in a segregated account?
	7. What financial resources are available to pay for improvements/expansion/ reconstruction?

POLLUTION PREVENTION CHECKLIST FOR MUNICIPAL WASTEWATER TREATMENT PLANTS (Continued)

I. MUNICIPAL POLLUTION PREVENTION PROJECTS

Yes No N/A	1. Does the plant have a pollution prevention program or strategy?
Yes No N/A	2. Has the plant conducted a self-audit on the adequacy of its maintenance, operation, funding, and operator training?
Yes No N/A	3. Does the pretreatment program include a pollution prevention component or specific pollution prevention projects?
	4. Does the municipality have any pollution prevention projects aimed at reducing toxic/hazardous waste discharges, conventional loadings, or flow (e.g., water conservation) from:
Yes No N/A	Households?
Yes No N/A	Commercial businesses?
Yes No N/A	Industries?

This page left intentionally blank.

15. MULTIMEDIA CONCERNS

Contents Page

A. Introduction 15-1

B. Overview of the Multimedia Approach to Inspections 15-3

C. Multimedia Concerns at NPDES Facilities and the Multimedia Screening Program . . . 15-5
RCRA 15-5
RCRA/CERCLA 15-6
Nonhazardous Sludge 15-6
Air 15-6
Multimedia Screening 15-7

D. NPDES Inspectors and Multimedia Inspections 15-9
Description of a Multimedia Inspection 15-9
The NPDES Inspector's Role in a Multimedia Inspection 15-9

E. References and Worksheet 15-13
References 15-13

Associated Appendices

Y. Media-Specific Inspection Components
Z. National Multimedia Screening Inspection Worksheet

This page intentionally left blank.

15. A. Introduction

This chapter is intended as a guide for National Pollutant Discharge Elimination System (NPDES) inspectors who become involved in multimedia environmental compliance inspections. Multimedia compliance investigations are intended to determine a facility's status of compliance with applicable laws, regulations, and permits in more than one media.

This chapter and the Media and Specific Inspection Components contained in Appendix Y include a significant amount of material drawn directly from the National Enforcement Investigations Center's (NEIC's) *Multimedia Investigation Manual* revised March 1992 and *Process-Based Inspections Guide*, March 1997. NPDES inspectors participating in multimedia inspections are referred to these documents for further guidance.

Additional training specific to the conduct of Multimedia Inspections is also available, and is recommended to anyone conducting or participating in multimedia inspections.

This page intentionally left blank.

15. B. Overview of the Multimedia Approach to Inspections

Most inspections can generally be grouped into four categories of increasing complexity, moving from Category A (program-specific compliance inspections) to Category D, (complex multimedia investigations), depending upon the complexity of the facility and the objectives of the investigation. The four general categories of investigations are described below:

Category A: Program-specific compliance inspections (e.g., compliance with NPDES permit requirements), conducted by one or more inspectors. The objective is to determine facility compliance status for program-specific regulations.

Category B: Program-specific compliance inspections, which are conducted by one or more inspectors. The inspector(s) screen for and report on obvious key indicators of possible noncompliance in other environmental program areas.

Category C: Several concurrent and coordinated program-specific compliance investigations conducted by a team of investigators representing two or more environmental and/or statutory program offices. The team, which is headed by a team leader, conducts a detailed compliance evaluation for each of the target programs. The objective is to determine compliance for several targeted program-specific areas. Reports on obvious, key indicators of possible noncompliance in other environmental program areas are also made.

Category D: Comprehensive facility multimedia evaluations not only address compliance in targeted program-specific regulations, but also try to identify environmental problems that might otherwise be overlooked. The initial focus is normally on facility processes to identify potentially regulated activities (from raw material management through final manufacturing and processing) and by-products/wastestreams generated, especially those that may not have been accurately reported to the regulators. When potentially regulated activities or wastestreams are identified, a compliance evaluation is made with respect to applicable requirements and subsequent compliance status. Special attention is often given to pollutants that “change media” (such as air pollutants that are scrubbed into wastewaters).

The investigation team, headed by a team leader, comprises staff thoroughly trained in different program areas. The onsite investigation is conducted during one or more site visits and involve intense concurrent program-specific compliance evaluations, often by the same cross-trained personnel.

Category D multimedia investigations are thorough and, consequently, resource intensive. They are appropriate for intermediate to large, complex facilities that are subject to a variety of environmental laws. Compliance determinations are made for several targeted program-specific areas, and reports on possible noncompliance are prepared.

Generally, all investigations will include pre-inspection planning, use of a project plan, sampling, inspection procedures, and a final report. The major difference will be in the number of different regulations addressed during Categories C and D investigations.

The multimedia approach to investigations has several advantages over program-specific inspections, including:

- A more comprehensive assessment of a facility's compliance status
- Improved enforcement support and better potential for enforcement
- A higher probability to uncover/prevent problems before they occur or before they manifest an environmental or public health risk
- Ability to respond more effectively to non-program-specific complaints, issues, or needs and to develop a better understanding of cross-media problems and issues, such as waste minimization
- When conducted correctly, the multimedia approach to investigations can be less resource intensive and yield more thorough results than numerous single media investigations.
- A higher probability of identifying cross-media issues, such as pollutants that can be “lost” as they change media.
- The opportunity to identify weaknesses in a facility’s Environmental Management Systems
- High visibility and possibly enhance deterrent effect on facility Corporate management

The success of a multimedia investigation program is contingent upon a good managerial system and the support of upper management. Since these investigations will often be conducted at larger facilities, adequate resources (time and personnel) must be provided. Good communications during the planning phase are essential to define the scope of the inspection, as well as each team member's role. Communications could also include State officials since State inspectors might also participate as team members. Because of the extent of the State's knowledge of the facility and its problems, State involvement is often critical to the success of the investigation. Similarly, coordination with other Federal or local agencies needs to be addressed, as necessary.

15. C. Multimedia Concerns at NPDES Facilities and the Multimedia Screening Program

RCRA

Many NPDES-regulated facilities are also subject to requirements of the Resource Conservation and Recovery Act (RCRA). RCRA regulates the generation, transportation, treatment, storage, and disposal of hazardous wastes. However, RCRA defers the control of hazardous wastes to the Clean Water Act (CWA) when those wastes are either directly discharged to surface waters under an NPDES permit (the direct discharge exclusion) or indirectly discharged to a wastewater treatment plant (the domestic sewage exclusion).

The costs of hazardous waste management using "traditional" storage, treatment, and disposal methods are rising significantly as facilities comply with the 1984 RCRA Amendments. Consequently, industrial facilities may use the two previously mentioned exclusions as preferred disposal methods. Since many of the 126 priority pollutants listed in the CWA would be considered hazardous waste constituents under RCRA, the discharge of these pollutants should concern the inspectors and operators of wastewater treatment plants. Hazardous wastes discharged to wastewater treatment plants pass through to surface waters unless incidentally removed in sludge, degraded, or "lost" through volatilization or exfiltration during the wastewater treatment process. Additionally, the RCRA waste may inhibit or reduce the effectiveness of the wastewater treatment processes potentially resulting in lower quality effluent discharges. Sludges resulting from the treatment of a hazardous waste may become a regulated waste under RCRA.

Special attention should be applied to situations where RCRA regulated hazardous wastes may be introduced into wastewater treatment facilities with surface impoundments with potential regulatory and groundwater contamination issues.

NPDES permit writers and inspectors may learn whether the facility conducts RCRA regulated activities, and the nature of those activities, from State and/or Environmental Protection Agency (EPA) RCRA authorities, databases such as EnvironFacts (public) or OTIS (EPA only) or while discussing facility industrial processes during the initial stages of a comprehensive compliance investigation. Industrial facilities can use and/or generate hazardous waste. The hazardous wastes may be in the liquid, gas, or solid form. These wastes may be generated from raw materials, off-specification products, or residuals or emissions from the process operations. In addition, waste oils used by process equipment, solvents used in cleaning operations, or sludges from treatment of process wastewaters can be hazardous wastes.

Publicly Owned Treatment Works (POTWs) receiving hazardous wastes by truck, rail, or dedicated pipeline are subject to RCRA permit by rule requirements. Included among these requirements is the provision that corrective action must be taken to remedy any contamination that may have resulted from a release of hazardous waste or hazardous constituents from solid waste management units, such as surface impoundments, to the environment. For example, if a POTW that is subject to these RCRA requirements contaminates groundwater through

leaching or exfiltration, the permittee might be required to investigate the nature and extent of those releases and, where appropriate, implement corrective measures. Guidance on the nature of these requirements, and how they might affect POTWs, is now being developed.

RCRA/CERCLA

Another source of contaminated wastewaters is hazardous waste cleanup actions. Under RCRA and the Comprehensive Environmental Response, Compensation, and Liability Act (CERCLA), EPA, States, and private parties are initiating cleanups of contaminated sites. Much of the waste found at these sites is in liquid form, either as leachate or contaminated groundwater. The treatment, and consequent discharge, of contaminated wastewaters from these sources are expected to increase in the future. These wastes will likely be complex mixtures, requiring careful examination of their composition to determine appropriate treatment techniques.

Nonhazardous Sludge

It has long been known that wastewater treatment results in the transfer of residuals from wastewater effluents to sludges. Several statutes and regulations, including the CWA, are charged with management of these nonhazardous sludges. NPDES and State permits include disposal limitations for municipal sewage sludge as specified in 40 *CFR* Part 503. Many States already impose such requirements. NPDES inspectors will need to become more familiar with the relationship between State sewage sludge requirements and Federal sewage sludge management and disposal requirements under the CWA and those imposed by other statutes and regulations, particularly RCRA and the Clean Air Act (CAA). Municipal sewage sludge that is co-incinerated with other wastes is regulated by the CAA. Municipal sewage sludge that is co-disposed with other waste in a municipal solid waste landfill is regulated by 40 *CFR* Part 258. Industrial sludges are regulated by 40 *CFR* Part 257 if land applied and by 40 *CFR* Part 258 if disposed of in a nonhazardous landfill. (See Chapter Ten for detailed information on the 40 *CFR* Part 503 requirements.)

Air

Air emissions from wastewater treatment units are under increased scrutiny. For many chemical industries (SOCMI facilities, Polymer Facilities, Petroleum Refineries, Vinyl Chloride Plants, etc), EPA has developed CAA regulations that limit the amount of volatile hazardous air pollutants that can be contained in process wastewaters. The purpose of these regulations are to minimize the amount of pollutants transferred from wastewater to the atmosphere. In general, facilities are required to treat wastewater streams that contain volatile hazardous air pollutants before than can be exposed to the atmosphere. It is important to be aware of what chemical constituents are in the wastewater and what impact this may have on a facilities compliance with CAA regulations. In another development, the 1984 RCRA amendments provide for the control of air emissions from authorized RCRA Treatment, Storage, and Disposal Facilities (TSDFs). As a result, wastewater treatment facilities at RCRA TSDFs are now being investigated by RCRA program personnel. It should be noted that remedial actions

may be required at some of these facilities and the regulatory issue of emissions from wastewater treatment facilities needs to be addressed.

Additionally, it is important to investigate facility activities, such as the use of air pollution control devices or other waste management activities, that remove pollutants from one media (such as air) but generate a wastewater stream. These wastewaters may not have been accurately reported in CWA permit applications and may not be properly managed.

Multimedia Screening

Regions and States are encouraged to incorporate multimedia screening into as many single medium inspections as possible (i.e., conduct Category B inspections in lieu of Category A inspections). Obtaining multimedia screening information earlier in the process will help target inspection resources and ensure that all noncompliance issues are included in any facility-specific enforcement strategy. The compliance inspector will use a multimedia screening checklist as a guide for making and recording observations and pertinent information.

The Environmental Services Division Field Branch Chiefs and NEIC have led the development and implementation of EPA's multimedia inspection program, including screening inspections. The National Multimedia Screening Inspection Worksheet, dated May 12, 1993, was developed as a general guideline by a Regional work group led by Region 3. A copy of this worksheet is included in Appendix Z. Regions and States have adapted and customized checklists such as this for their own use.

This page intentionally left blank.

15. D. NPDES Inspectors and Multimedia Inspections

Description of a Multimedia Inspection

The strategy developed for multimedia inspections usually involves prioritizing the processes and waste management activities, followed by systematically moving from the beginning to the end of a process with emphasis on regulated wastestream generation to final wastestream management. The strategy should be somewhat flexible so that "mid-course corrections" can be made.

The compliance evaluations for each media should be coordinated among all of the investigators and scheduled to make most effective use of the inspectors on-site time and facility contact resources. This schedule should loosely identify time for each media investigator to; review documents, interview facility personnel, conduct on-stie observations, and conduct sampling as appropriate. This schedule must be “organic” and modified throughout the on-site investigation to effectively use the limited available time. Daily meetings between team members to discuss progress and needs are recommended to help modify this schedule to meet the team and the facility personnel needs. Personnel training and availability and other logistical factors may result in a combining of compliance evaluations.

The strategy for process and compliance evaluations should be developed by the inspection team coordinator and discussed with inspection team members. This will serve as the basis for explaining inspection activities and scheduling to the company during the opening conference.

The strategy could include checklists that address potential process wastestreams to be examined and media-specific compliance issues. Checklists can be a vital component of a compliance investigation to help ensure that an investigator does not overlook anything important. Checklists serve as a reminder of what needs to be asked or examined and to help an inspector remember the basic regulatory requirements. However, checklists should not be a replacement for curiosity and common sense.

In larger facilities, multiple site visits coordinated by the team leader may be necessary and desirable for completing the inspection and following-up on issues identified during earlier site visits. This approach can lead to a better overall site compliance determination because of the opportunity to review information obtained in the office, then refine the inspection/strategy to "fill in the gaps" during a subsequent site visit.

The NPDES Inspector's Role in a Multimedia Inspection

Each multimedia investigation team member should bring special program expertise and experience and must be well trained in most facets of conducting a field investigation, including sampling. Most of the investigators on the team, including the team leader, should be current field investigators who already possess most of the necessary skills and qualifications. EPA Order 3500.1 sets forth specific training requirements for any EPA investigator who is leading a single media investigation. These training requirements include both general inspection

procedures and media-specific procedures. While an individual leading a multimedia investigation may not have had the media-specific training for each media covered during that multimedia investigation, the team leader should have the media-specific training for at least two of the media.

The team leader has overall responsibility for the successful completion of the multimedia investigation. In addition, other investigators may be designated as leads for each of the specific media/programs that will be addressed. These individuals may work alone or have one or more inspectors/samplers as assistants, depending on workload and objectives. However, all investigation team members should report directly to, and be accountable to, the team leader.

The following are some of the more important skills and qualifications that are necessary for team members:

- The ability to work effectively as a member of a diverse team
- Knowledge of the Agency's policies and procedures regarding inspection authority, entry procedures/problems, enforcement actions, legal issues, and safety
- Thorough understanding of sampling equipment; quality assurance (QA) requirements for sample collection, identification, and preservation; and chain-of-custody procedures
- Knowledge of manufacturing/waste producing processes, pollution control technology, principles of waste management, flow measurement theory and procedures, and waste monitoring techniques/equipment
- Investigatory skills including the ability to gather evidence through good interviewing techniques and astute observations
- Ability to convey information gathered during the inspection into clear, understandable investigation reports.
- Up-to-date experience in conducting compliance inspections
- Good communication skills
- Basic understanding of the procedures of obtaining administrative warrants, including preparation of affidavits, technical content of the warrant application, and warrant and procedures for serving a warrant
- At least one team member should have considerable knowledge of laboratory (analytical) methods and Quality Assurance (QA) requirements, if a laboratory evaluation is to be conducted
- For each of the areas addressed in the multimedia investigation, at least one team member should be trained.

Investigators should conduct themselves in a professional manner and maintain credibility. A cooperative spirit should be cultivated within the inspection team and with facility

representatives, when possible. All investigators should maintain a sensitivity to multimedia issues and implications and freely and routinely discuss, with other members of the team, observations/findings relating to one or more programs.

Investigators should restrict their onsite activities to the normal working hours of the facility, as much as possible. Investigators will need to keep abreast of specific program regulations and should also coordinate, as necessary, with other EPA and State inspectors and laboratory staff (if samples will be collected). The investigation team should implement appropriate field note taking methods and proper document control procedures, particularly when the company asserts a "confidential" claim. Investigators must ensure that important documents (e.g., project plan, safety plan, and log books) are not left unattended at the facility. Sensitive discussions do not take place in front of facility personnel or on company telephones.

This page intentionally left blank.

15. E. References and Worksheet

References

National Enforcement Investigations Center (NEIC). March 1992. *Multimedia Investigation Manual and March 1997 P*rocess-Based Inspections Guide (EPA-330/9-97-001).

This page intentionally left blank.

16. CONCENTRATED ANIMAL FEEDING OPERATIONS

Contents Page

A. Objectives 16-1
Legal Authority for CAFO Inspections 16-1
Responsibilities of the CAFO Inspector 16-1

B. CAFO Regulation Overview 16-3
Overview 16-3
Regulatory Background 16-3
Animal Feeding Operation 16-3
Concentrated Animal Feeding Operation 16-3
Requirements for NPDES Permit for CAFOs 16-14
NPDES Permit Effluent Limitations and Standards for CAFOs 16-16
Technical Standard for Nutrient Management 16-20
NPDES Permit for CAFOs: Special Conditions 16-20
NPDES Permit for CAFOs: Monitoring, Reporting, and Record-Keeping Requirements 16-24

C. CAFO Inspection Overview 16-27
Purpose of AFO/CAFO Inspections 16-27
EPA Authority for AFO/CAFO Inspections 16-27
Selection of Facilities for Inspection 16-28
General Process of an Inspection 16-29
CAFO Operational Overview 16-32
CAFO Inspection Sampling Procedures 16-35
Safety Issues and Bio-security at CAFOs 16-36

D. Multimedia Concerns 16-40
Multimedia Concerns 16-40
Multimedia Inspections and Multimedia Screening 16-40
Multimedia Concerns at CAFOs 16-40
Other Regulatory Requirements 16-40

E. References 16-43

Tables

16-1. Example Factors for Case-by-Case Designation 16-6
16-2. Thresholds for Cattle (Other than mature dairy cows) 16-7
16-3. Thresholds for Mature Dairy Cows 16-8
16-4. Thresholds for Swine (55 pounds or more) 16-8
16-5. Thresholds for Swine (Less than 55 pounds) 16-9
16-6. Thresholds for Horses 16-9

16-7. Thresholds for Sheep or Lambs 16-10
16-8. Thresholds for Turkey 16-10
16-9. Thresholds for Chickens (Operations with a liquid manure handling system) 16-11
16-10. Thresholds for Laying Hens (Operations with other than a liquid manure handling system) 16-11
16-11. Thresholds for Chickens Other Than Laying Hens (Operations with other than a liquid manure handling system) 16-12
16-12. Thresholds for Ducks (Operations with a liquid manure handling system) 16-13
16-13. Thresholds for Ducks (Operations with other than a liquid manure handling system) 16-13
16-14. Elements of an NPDES Permit 16-14
16-15. Effluent Limitations Summary 16-17
16-16. NPDES CAFO Permit Minimum Practices 16-22
16-17. NPDES Large CAFO Permit Record-Keeping Requirements 16-24

Associated Appendices

AA. Bio-Security Guidance (Final)
BB. NPDES CAFO Permit and NMP Minimum Practices Review Checklist

Related Web Sites

Office of Wastewater Management (OWM) Homepage: http://www.epa.gov/owm
National Agriculture Compliance Assistance Center: http://www.epa.gov/agriculture/

16. A. Objectives

In addition to materials in this chapter, inspectors must be familiar with Chapter 1 - "Introduction" & Chapter 2 - "Inspection Procedures".

The purpose of this Concentrated Animal Feeding Operations (CAFOs) chapter is to provide an overview of the National Pollutant Discharge Elimination System (NPDES) CAFO regulations which include the effluent limitations guidelines (ELGs) and standards for CAFOs. The chapter is for use by state and regional inspectors. It is intended to be used together with the *NPDES Permit Writers' Guidance Manual and Example NPDES Permit for Concentrated Animal Feeding Operations* (the Guidance), published in December 2003, which contains information specific to the inspection of CAFOs. The Guidance reflects the revisions to the ELGs and standards for CAFOs (68 *Federal Register* (FR) 7176: February 12, 2003) that became effective on April 14, 2003. It replaces the previous guidance on NPDES CAFO permits, *Guide Manual on NPDES Regulations for Concentrated Animal Feeding Operations*, issued in 1995. States have from 1 to 2 years to revise their programs to reflect the 2003 CAFO regulations. Under the new regulations, states that do not require a statutory change must revise their programs by February 12, 2004; states that require a statutory change have until February 13, 2005.

The remainder of the *National Pollutant Discharge Elimination System (NPDES) Compliance Inspection Manual* should be consulted for general information about NPDES inspections.

Legal Authority for CAFO Inspections

The Federal Water Pollution Control Act of 1972, as amended by the Clean Water Act (CWA) of 1977 and the Water Quality Control Act of 1987, gives EPA the authority to regulate the discharge of pollutants to waters of the United States. The CWA provides broadly defined authority to establish the NPDES Permit Program, define pollution control technologies, establish effluent limitations, obtain information through reporting and compliance inspections, and take enforcement actions (both civil and criminal) when violations of the act occur.

Section 301(a) of the CWA establishes statutory requirements for the discharge of pollutants from point sources to waters of the United States. Under CWA Section 502(14) and its implementing regulations at 40 CFR Part 122, CAFOs are point source discharges and are therefore subject to the NPDES permitting requirements.

Responsibilities of the CAFO Inspector

The primary role of a CAFO inspector is to gather information to evaluate compliance with the NPDES CAFO permit conditions, including the effluent limitations and any other applicable regulations. The CAFO inspector also plays an important role in enforcement case development and support, as well as permit development. To fulfill these roles, an inspector is required to know and abide by applicable regulations, permits, policies, and procedures; legal requirements concerning inspections; procedures for effective inspection and evidence collection; accepted health and safety practices; and quality assurance standards.

This chapter is primarily for use by EPA inspectors, but it might also be valuable in orienting and training state inspectors and other regional personnel involved in CAFO enforcement work. Procedures are recommended in this manual, but equivalent state procedures may be substituted where appropriate.

16. B. CAFO Regulation Overview

Overview

This section defines the term *animal feeding operation* (AFO) and explains which AFOs are CAFOs and subject to NPDES permitting requirements.

Regulatory Background

Section 301(a) of the CWA establishes statutory requirements for the discharge of pollutants from point sources to waters of the United States. Under CWA section 502(14) and its implementing regulations at 40 CFR Part 122, CAFOs are point source discharges and are therefore subject to the NPDES permitting requirements. The effluent limitations guidelines (ELGs) and standards for CAFOs are at 40 CFR Part 412.

Animal Feeding Operation

An AFO is an animal facility that meets both of these conditions:

- Animals are confined for at least 45 days during any 12-month period. The 45 days of confinement do not have to be 45 days in a row, and the 12-month period can be any consecutive 12 months.
- Crops, forage growth, and other vegetation are not grown in the area where the animals are confined.

Pasture and rangeland operations are not AFOs because the animals are not confined or concentrated in an area where manure builds up. A pasture or grazing-based operation, however, might also have additional areas such as feedlots, barns, or pens that meet the conditions described above to be defined as an AFO. A winter feedlot can still be an AFO even if the feedlot area is used to grow crops or forage when animals are not confined there. In the case of winter feedlots, the “no vegetation” condition applies to only the time when the animals are confined there. The AFO definition is not limited to the animal types discussed in the regulations. An operation that confines any type of animal and meets both of the conditions in the definition is an AFO. In addition to confinement areas at animal production facilities, confinement areas at auction houses, sale barns, livestock marketing areas, horse show arenas, and stable areas of racetracks may be considered AFOs if they meet both of the conditions in the definition.

Concentrated Animal Feeding Operation

For a facility to be a CAFO, it must first meet the regulatory definition of an AFO. A CAFO is an AFO that meets specific, regulation-defined, characteristics. There are two ways for an AFO to be considered a CAFO:

- An AFO may be defined as a CAFO
- An AFO may be designated as a CAFO

AFOs Defined as CAFOs

An AFO may be defined as a CAFO if it has a certain number of animals and it meets the other criteria in the regulations. The regulations set thresholds for size categories (Large, Medium, and Small) based on the number of animals confined at the operation for a total of 45 days or more in any 12-month period. Tables provided later in this chapter show the thresholds for Large, Medium, and Small CAFOs for different kinds of animals.

Large CAFOs

An operation is defined as a Large CAFO if it meets the regulatory definition of an AFO and meets the Large CAFO threshold for that animal type (See Tables 16-2 through 16-13).

Medium CAFOs

An operation is defined as a Medium CAFO if it meets the regulatory definition of an AFO, meets the Medium CAFO thresholds for that animal type (See Tables 16-2 through 16-13), and meets at least one of the following two criteria (called "discharge criteria"):

- A man-made ditch, pipe, or similar device carries manure or process wastewater from the operation to surface water or
- The animals come into contact with surface water that runs through the area where they are confined.

The discharge criteria apply to only the parts of the operation that have animals confined, store manure or raw materials, and contain waste. For example, if a ditch is dug or a pipe is installed to drain water from the confinement area into a stream or lake, the operation would meet the first discharge criterion. Open tile drains in the areas where animals are confined, wastes are collected and stored, or raw materials are kept also meet the first criterion if the tile drains carry pollutants from these areas to surface water. The operation meets the second discharge criterion if a stream runs through the confinement area and the animals have direct access to the stream.

Small CAFOs

Small CAFOs are AFOs that confine fewer than the number of animals that defines a Medium CAFO, meet specific discharge criteria, and have been designated as CAFOs (see the designation discussion below).

AFOs Designated as CAFOs

The second mechanism for an AFO to be determined to be a CAFO is through designation. The NPDES regulations for CAFOs set forth the standards and process for the NPDES permitting authority, or in some cases EPA, to designate, on a case-by-case basis, any AFO as a CAFO, upon determining that the facility is a significant contributor of pollutants to waters of the United States. Designation ensures protection of surface water quality while maintaining flexibility for states or other entities to assist small and medium operations in removing risk conditions before they become subject to the NPDES requirements applicable to CAFOs.

Any AFO may be designated as a CAFO, on a case-by-case basis, if it is determined to be a significant contributor of pollutants to waters of the United States as specified in 40 CFR

122.23(c). Given the structure of the CAFO definition, however, three types of AFO operations are typically considered for designation:

- A medium-sized AFO that does not meet one of the specific discharge criteria and is determined to be a significant contributor of pollutants to waters of the United States.
- A small AFO (one that confines fewer than the number of animals that define a Medium CAFO) if the facility meets one of the method of discharge criteria [40 CFR 122.23(c)(3)(i) and (ii)] and is determined to be a significant contributor of pollutants to waters of the United States.
- An AFO that raises animals other than species identified in the regulatory definition of a CAFO and is determined to be a significant contributor of pollutants to waters of the United States. Examples of such AFOs include operations that raise geese, emus, ostriches, llamas, mink, bison, alligators.

No operation may be designated as a CAFO until an inspector has conducted an on-site inspection of the facility, regardless of the size of the operation or the type of animals confined [40 CFR 122.23(c)(3)].

Factors to Be Considered When Designating an AFO as a CAFO

For an AFO to be designated as a CAFO, it must be determined to be a significant contributor of pollutants to waters of the United States by the permitting authority or, in some cases, the EPA Regional Administrator [40 CFR 122.23(c)]. Once an operation is designated as a CAFO, it must seek coverage under an NPDES permit and, among other requirements, develop and implement a nutrient management plan.

An AFO may not be designated as a CAFO until the NPDES permitting authority or EPA has conducted an on-site inspection of the operation and determined that the operation should and could be regulated under the permit program [40 CFR 122.23(c)(3)]. In addition, a small AFO may not be designated as a CAFO unless it also meets the small AFO method of discharge criteria [122.23(c)(3)(i) and (ii)] and is determined to be a significant contributor of pollutants to waters of the United States.

The on-site inspection serves three primary objectives: (1) to confirm that the facility meets the AFO definition, (2) to collect information related to the CAFO designation factors, and (3) to provide notice to the AFO that it might be designated as a CAFO. The requirement for an on-site inspection helps ensure that a reasoned assessment of the situation has been performed. EPA recommends that the designation process be conducted as soon as possible following the inspection. Regardless of when an inspection takes place, the designation should be based on current information.

In determining whether an AFO is a significant contributor of pollutants to waters of the United States, the permitting authority or EPA Regional Administrator is to consider the factors specified in 40 CFR 122.23(c)(2), which are listed in the left column of Table 16-1. The right column in Table 16-1 gives examples of case-by-case designation factors that might be assessed during the designation inspection. The assessment of regulatory factors may be based on visual observations, as well as water quality monitoring and other sources of relevant information.

Table 16-1. Example Factors for Case-by-Case CAFO Designation

Designation Factor	Example Factors for Inspection Focus
❑ Size of the Operation and Amount of Waste Reaching Waters of the United States	• Number of animals • Type of feedlot surface • Feedlot design capacity • Waste handling/storage system design capacity
❑ Location of the Operation Relative to Waters of the United States	• Location of water bodies • Location of floodplain • Proximity of production area and land application area to waters of the United States • Depth to ground water, direct hydrologic connection to waters of the United States • Location in an impaired watershed
❑ Means of Conveyance of Animal Waste and Process Wastewater into Waters of the United States	• Existing or potential man-made (including natural and artificial materials) structures that might convey waste • Direct contact between animals and waters of the United States.
❑ Slope, Vegetation, Rainfall, and Other Factors Affecting the Likelihood or Frequency of Discharge of Animal Waste, Manure, and Process Wastewater into Waters of the United States	• Slope of feedlot and surrounding land • Type of feedlot (concrete, soil) • Climate (e.g., arid or wet) • Type and condition of soils (e.g., sand, karst) • Drainage controls • Storage structures • Amount of rainfall • Volume and quantity of runoff • High water table • Buffers
❑ Other Relevant Factors	• History of noncompliance • Use of conservation practices to minimize nutrient transport to waters of the United States • Working with USDA or Soil and Water Conservation District to improve operation

Following the on-site inspection for designation, the inspector should prepare a brief report that (1) identifies findings and any follow-up actions, (2) determines whether the facility should be designated as a CAFO, and (3) documents the reasons for that determination. Regardless of the outcome, a letter should be prepared and sent to inform the facility of the results of the inspection. If the permitting authority has made a decision to designate an AFO as a CAFO, the letter should specify that the operation must obtain an NPDES permit. The letter should indicate whether a general permit is available or whether an individual permit application is to be submitted by a specific date. In those cases where a facility has not been designated as a CAFO but the NPDES permitting authority has identified areas of concern, these areas should be noted in the letter. The letter should state that if these concerns are not corrected, the facility might be designated in the future. It should also include a date for a follow-up inspection to determine whether the concerns have been adequately addressed.

EPA Designation Authority

The NPDES CAFO regulations explicitly authorize the EPA Regional Administrator to designate AFOs as CAFOs in NPDES-authorized states and tribes where the Regional Administrator has determined that one or more pollutants in an AFO's discharge contribute to an impairment in a downstream or adjacent state or Indian Country water that is impaired by that pollutant. Such designation is based on assessment of the factors in 40 CFR 122.23(c)(2) and also requires an

on-site inspection. Upon designation by EPA, the operation is required to apply to the permitting authority for permit coverage.

CAFO Definition Thresholds for Specific Animal Sectors

In the NPDES CAFO regulations, EPA has set thresholds for determining which AFOs are CAFOs for specific animal sectors. The thresholds define which AFOs are Large CAFOs. In addition, the thresholds, along with regulation-defined discharge criteria, define which AFOs are Medium CAFOs. The thresholds also determine which operations are potentially subject to designation. Tables 16-2 through 16-13 show these thresholds for the various animal sectors.

The thresholds in Table 16-2 apply to operations that confine any kind of cattle other than mature dairy cows, including heifers, steers, bulls, and cow/calf pairs. For example, these thresholds apply to beef cattle operations such as feedlots and backgrounding yards, veal calf operations, and contract dairy heifer operations. Except for cow/calf pairs, each animal is counted as one animal, regardless of its age or weight. In the case of cow/calf pairs, the pair is counted as one animal until the calf is weaned. After the calf is weaned, the cow and calf count as individual animals.

Table 16-2. Thresholds for Cattle (other than mature dairy cows)

An AFO that has ...	is a...	by ...
at least 1,000 cattle, dairy heifers, cow/calf pairs, or veal calves	Large CAFO	regulatory definition
from 300 to 999 cattle, dairy heifers, cow/calf pairs, or veal calves and meets one of the medium category discharge criteria	Medium CAFO	regulatory definition
from 300 to 999 cattle, dairy heifers, cow/calf pairs, or veal calves **and** has been designated by the permitting authority	Medium CAFO	designation
fewer than 300 cattle, dairy heifers, cow/calf pairs, or veal calves **and** has been designated by the permitting authority	Small CAFO	designation

The thresholds in Table 16-3 apply to operations that confine mature dairy cows. Mature dairy cows include both milked and “dry” cows. Thresholds for AFOs that house any other kind of cattle, including heifers and veal calves, are shown in Table 16-2 (“Thresholds for Cattle (other than mature dairy cows”).

Table 16-3. Thresholds for Mature Dairy Cows

An AFO that has ...	is a...	by ...
at least 700 mature dairy cows	Large CAFO	regulatory definition

from 200 to 699 mature dairy cows and meets one of the medium category discharge criteria	Medium CAFO	regulatory definition
from 200 to 699 mature dairy cows **and** has been designated by the permitting authority	Medium CAFO	designation
fewer than 200 mature dairy cows **and** has been designated by the permitting authority	Small CAFO	designation

The thresholds in Table 16-4 apply to operations that confine swine that weigh at least 55 pounds. These operations include farrow-finish operations, wean-finish operations, farrowing operations, breeding operations, grow-finish operations, and other specialized AFOs that confine mature swine. AFOs that house immature swine (less than 55 pounds) might also be subject to the thresholds shown in Table 16-5 ("Thresholds for Swine (less than 55 pounds)").

Table 16-4. Thresholds for Swine (55 pounds or more)

An AFO that has ...	is a...	by ...
at least 2,500 swine weighing 55 pounds or more	Large CAFO	regulatory definition
from 750 to 2,499 swine weighing 55 pounds or more **and** meets one of the medium category discharge criteria	Medium CAFO	regulatory definition
from 750 to 2,499 swine weighing 55 pounds or more **and** has been designated by the permitting authority	Medium CAFO	designation
fewer than 750 swine weighing 55 pounds or more **and** has been designated by the permitting authority	Small CAFO	designation

The thresholds in Table 16-5 apply to operations that confine swine that weigh less than 55 pounds. These thresholds typically apply to swine nurseries, but they may also apply to other facilities that confine swine of all sizes but primarily confine large numbers of immature swine. For example, an operation with 1,000 sows, 50 boars, and 14,000 newborn pigs is a Large CAFO. Remember that AFOs that house "mature" swine (55 pounds or more) are already subject to the thresholds in the sector "swine (55 pounds or more)" (Table 16-4). Therefore, a swine operation could be defined as a CAFO because of the number of swine weighing 55 pounds or more, the number of swine weighing less than 55 pounds, or both.

Table 16-5. Thresholds for Swine (less than 55 pounds)

An AFO that has ...	is a...	by ...
at least 10,000 swine weighing less than 55 pounds	Large CAFO	regulatory definition

from 3,000 to 9,999 swine weighing less than 55 pounds **and** meets one of the medium category discharge criteria	Medium CAFO	regulatory definition
from 3,000 to 9,999 swine weighing less than 55 pounds **and** has been designated by the permitting authority	Medium CAFO	designation
fewer than 3,000 swine weighing less than 55 pounds **and** has been designated by the permitting authority	Small CAFO	designation

The thresholds in Table 16-6 apply to operations that confine horses. The confinement area does not include areas like pastures. Most horse operations confine their animals only for short-term stabling or visits to stalls for shoeing, veterinary care, or similar activities. The horses might not be confined for enough days for the operation to meet the criteria for being an AFO. Data from the U.S. Department of Agriculture's (USDA's) National Animal Health Monitoring System suggest that practically all Large horse CAFOs (those with more than 500 horses in confinement) are racetracks.

Table 16-6. Thresholds for Horses

An AFO that has ...	is a...	by ...
at least 500 horses	Large CAFO	regulatory definition
from 150 to 499 horses **and** meets one of the medium category discharge criteria	Medium CAFO	regulatory definition
from 150 to 499 horses **and** has been designated by the permitting authority	Medium CAFO	designation
fewer than 150 horses **and** has been designated by the permitting authority	Small CAFO	designation

The thresholds in Table 16-7 apply to operations that confine sheep, lambs, or both. All confined sheep and lambs are counted to determine whether the operation meets these thresholds. Confinement areas do not include grazing pastures. Operations with grazing areas might confine animals only for shearing, veterinary care, and lambing and before sale or processing. The animals might not be confined for enough days for the operation to be considered an AFO. Animals must be confined for 45 days or more in a 12-month period for an operation to be considered an AFO.

Table 16-7. Thresholds for Sheep or Lambs

An AFO that has ...	is a...	by ...
at least 10,000 sheep or lambs mature dairy cows	Large CAFO	regulatory definition

from 3,000 to 9,999 sheep or lambs **and** meets one of the medium category discharge criteria	Medium CAFO	regulatory definition
from 3,000 to 9,999 sheep or lambs **and** has been designated by the permitting authority	Medium CAFO	designation
fewer than 3,000 sheep or lambs **and** has been designated by the permitting authority	Small CAFO	designation

The thresholds in Table 16-8 apply to operations that confine turkeys. Most turkey operations today confine their birds in confinement houses, but turkeys are also raised on lots. All birds, including poults and breeders, are counted to determine whether the operation meets the thresholds.

Table 16-8. Thresholds for Turkeys

An AFO that has ...	is a...	by ...
at least 55,000 turkeys	Large CAFO	regulatory definition
from 16,500 to 54,999 turkeys **and** meets one of the medium category discharge criteria	Medium CAFO	regulatory definition
from 16,500 to 54,999 turkeys **and** has been designated by the permitting authority	Medium CAFO	designation
fewer than 16,500 turkeys **and** has been designated by the permitting authority	Small CAFO	designation

The thresholds in Table 16-9 apply to operations that confine laying hens or broiler chickens **and** use a liquid manure handling system (such as caged housing where manure is flushed to a lagoon). Liquid manure handling systems are relatively common among layer operations and are rarely used in other chicken operations. Operations that do not use liquid manure handling systems are subject to thresholds for the sector "laying hens (operations with other than a liquid manure handling system)" (Table 16-10) or "chickens other than laying hens (operations with other than a liquid manure handling system)" (Table 16-11). For pullets see "Thresholds for Chickens other than laying hens (operations with other than a liquid manure handling system)" (Table 16-11).

Table 16-9. Thresholds for Chickens (operations with a liquid handling system)

An AFO that has ...	is a...	by ...
at least 30,000 chickens and uses a liquid manure handling system	Large CAFO	regulatory definition

from 9,000 to 29,999 chickens, uses a liquid manure handling system, **and** meets one of the medium category discharge criteria	Medium CAFO	regulatory definition
from 9,000 to 29,999 chickens, uses a liquid manure handling system, **and** has been designated by the permitting authority	Medium CAFO	designation
fewer than 9,000 chickens, uses a liquid manure handling system, **and** has been designated by the permitting authority	Small CAFO	designation

The thresholds in Table 16-10 apply to layer operations that do not use a liquid manure handling system. These operations include scrape-out and belt manure handling systems, high-rise cage housing, and litter-based housing. A chicken operation that uses a liquid manure handling system is subject to thresholds for the sector "chickens (operations with a liquid manure handling system)" (Table 16-9). Non-layer operations, including broiler operations, that do not use a liquid manure handling system are subject to thresholds in the sector "chickens other than laying hens (operations with other than a liquid manure handling system)" (Table 16-11).

Table 16-10. Thresholds for Laying Hens (operations with other than a liquid manure handling system)

An AFO that has ...	is a...	by ...
at least 82,000 laying hens and **does not** use a liquid manure handling system	Large CAFO	regulatory definition
from 25,000 to 81,999 laying hens, **does not** use a liquid manure handling system, **and** meets one of the medium category discharge criteria	Medium CAFO	regulatory definition
from 25,000 to 81,999 laying hens, **does not** use a liquid manure handling system, **and** has been designated by the permitting authority	Medium CAFO	designation
fewer than 25,000 laying hens, **does not** use a liquid manure handling system, **and** has been designated by the permitting authority	Small CAFO	designation

The thresholds in Table 16-11 apply to operations that confine broilers, roasters, pullets, or breeders **and** do not use a liquid manure handling system. These chicken operations typically use enclosed housing and dry litter systems. A chicken operation that uses a liquid manure handling system is subject to thresholds for the sector "chickens (operations with a liquid manure handling system)" (Table 16-9). A layer operation that does not use a liquid manure handling system is subject to thresholds for the sector "laying hens (operations with other than a liquid manure handling system)" (Table 16-10).

Chicken operations with uncovered litter stockpiles are treated as operations with liquid manure handling systems and are subject to the Large CAFO threshold of 30,000 chickens for operations with a liquid manure handling system. By covering such stockpiles, a chicken operation becomes eligible for the higher thresholds for operations with other than a liquid manure handling system.

Table 16-11. Thresholds for Chickens Other Than Laying Hens (operations with other than a liquid manure handling system)

An AFO that has ...	is a...	by ...
at least 125,000 chickens other than laying hens and **does not** use a liquid manure handling system	Large CAFO	regulatory definition
from 37,500 to 124,999 chickens other than laying hens, **does not** use a liquid manure handling system, **and** meets one of the medium category discharge criteria.	Medium CAFO	regulatory definition
from 37,500 to 124,999 chickens other than laying hens, **does not** use a liquid manure handling system, **and** has been designated by the permitting authority	Medium CAFO	designation
fewer than 37,500 chickens other than laying hens, **does not** use a liquid manure handling system, **and** has been designated by the permitting authority	Small CAFO	designation

The thresholds in Table 16-12 apply to duck operations that use a liquid manure handling system. These include operations with “wet” lots, lots with storage ponds, lots with swimming areas, and operations that flush manure from confinement buildings to lagoons. All birds confined at the operation are counted to determine whether the operation meets the thresholds. A duck operation that does not use a liquid manure handling system is subject to thresholds for the sector “ducks (operations with other than a liquid manure handling system)” (Table 16-13).

Table 16-12. Thresholds for Ducks (operations with a liquid manure handling system)

An AFO that has ...	is a...	by ...
at least 5,000 ducks and uses a liquid manure handling system	Large CAFO	regulatory definition
from 1,500 to 4,999 ducks, uses a liquid manure handling system, **and** meets one of the medium category discharge criteria	Medium CAFO	regulatory definition
from 1,500 to 4,999 ducks, uses a liquid manure handling system, **and** has been designated by the permitting authority	Medium CAFO	designation

fewer than 1,500 ducks, uses a liquid manure handling system, **and** has been designated by the permitting authority	Small CAFO	designation

The thresholds in Table 16-13 apply to any duck operation that does not use a liquid manure handling system. All birds confined at the operation are counted to determine whether the operation meets the thresholds. A duck operation that uses a liquid manure handling system is subject to thresholds for the sector "ducks (operations with a liquid manure handling system)" (Table 16-12).

Table 16-13. Thresholds for Ducks (operations with other than a liquid manure handling system)

An AFO that has ...	is a...	by ...
at least 30,000 dusks and does not use a liquid manure handling system	Large CAFO	regulatory definition
from 10,000 to 29,999 ducks, **does not** use a liquid manure handling system, **and** meets one of the medium category discharge criteria	Medium CAFO	regulatory definition
from 10,000 to 29,999 ducks, **does not** use a liquid manure handling system, **and** has been designated by the permitting authority	Medium CAFO	designation
fewer than 10,000 ducks, **does not** use a liquid manure handling system, **and** has been designated by the permitting authority	Small CAFO	designation

Practices That Constitute a Liquid Manure Handling System at Chicken Operations

The thresholds for chicken AFOs in the CAFO definition are based on the type of litter or manure handling system being used. The system is either a liquid manure handling system or other than a liquid manure handling system. A liquid manure handling system includes the use of pits, lagoons, flush systems (usually combined with lagoons), and holding ponds. Systems such as continuous overflow watering, where water is added to manure or litter, are also liquid manure handling systems. In addition, an operation that removes waste from confinement areas and stacks or piles it in areas exposed to rainfall is considered to have a liquid manure system. Such operations include those operations that remove litter from the confinement area and stockpile or store it in remote locations. Permitting authorities may authorize a limited period of temporary storage of litter of no more than 15 days that would not result in the facility's meeting the definition of a liquid manure handling system (e.g., where this limited time is needed to allow for contract hauling arrangements). Once litter is stockpiled beyond such a temporary period, the uncovered stockpile constitutes a liquid manure handling system and the lower threshold for chickens at 30,000 birds and ducks at 5,000 birds becomes applicable to the operation.

Distinguishing Wet Lot and Dry Lot Duck Operations

For ducks, there are two thresholds for defining an operation as a CAFO: (1) where the animals are raised outside with swimming areas or ponds, or with a stream running through an open lot, or (2) in confinement buildings where water is used to flush the manure to a lagoon, pond, or other liquid storage structure. These types of operations are considered to be wet lots with liquid manure handling systems.

A duck operation using confinement buildings and handling manure and bedding exclusively as dry material; an operation using a building with a mesh or slatted floor over a concrete pit, where the manure is scraped into a waste storage facility; or an operation using dry bedding on a solid floor is referred to as a "dry" operation. These operations use other than a liquid manure handling system. In the case of operations that stack litter, however, see the discussion above.

AFOs With More Than One Type of Animal

An AFO is defined as a CAFO if any one animal type in confinement meets the threshold for either a Large or Medium CAFO. An operation that meets the threshold for a Medium CAFO must also meet one of the discharge criteria to be defined as a Medium CAFO. Under the revised NPDES CAFO regulation, multiple types of animals are no longer counted together to determine the type and size of a CAFO. However, once a given operation is defined as a CAFO, regardless of animal type, the regulations apply to all the manure, litter, and wastewater generated by all the animals confined at the operation. In the event that waste streams from multiple livestock species are commingled and the regulatory requirements for the species are not the same, the permit must include the more stringent ELG requirements.

Requirements for NPDES Permit for CAFO

The basic elements of an NPDES permit for a CAFO are the same as those of permits issued to other point sources. These elements consist of a cover page, effluent limitations, monitoring and reporting requirements, record-keeping requirements, special conditions, and standard conditions (see Table 16-14). For additional details on the elements of an NPDES permit, refer to the *U.S. EPA NPDES Permit Writers' Manual* (EPA-833-B-96-003).

Table 16-14. Elements of an NPDES Permit

Element	Description
Cover Page	Serves as the legal notice of the applicability of the permit, provides the authority under which the permit is issued, and contains appropriate dates and signature(s).
Effluent Limitations and Standards	Serves as the primary mechanism for controlling discharges of pollutants to receiving waters (e.g., the specific narrative or numeric limitations applied to the facility and the point of application of these limits).
Monitoring and Reporting Requirements	Identifies all the specific conditions related to the types of monitoring to be performed, the frequencies for collecting samples or data, and how to record, maintain, and transmit the data and information to the permitting authority.
Record-Keeping Requirements	Specifies the types of records to be kept on-site at the permitted facility (e.g., inspection and monitoring records; manure and soil sampling results; time, amount, and duration of land application activities; precipitation records; records of recipients of waste intended for application on land outside the operational control of the CAFO facility).

Table 16-14. Elements of an NPDES Permit

Element	Description
Special Conditions	In NPDES permits for CAFOs, special conditions must include (1) the requirement to develop and fully implement a nutrient management plan and (2) the requirement that the nutrient management plan address nine minimum practices defined in the regulation. In addition, NPDES permits for CAFOs may include other special conditions as determined necessary by the permitting authority.
Standard Conditions	Conditions that apply to all NPDES permits, such as the requirement to properly operate and maintain all facilities and systems of treatment and control, as specified in 40 CFR 122.41.

Role of the Inspector

The content of a specific permit may vary, but permits will generally address the six elements in Table 16-14. The inspector's role, however, is to determine compliance with the actual permit as written, not what the permit should contain. The permit conditions required by the NPDES CAFO regulations are outlined below to help inspectors understand what provisions they are likely to find in CAFO permits.

CAFOs That Are Not Required to Have an NPDES Permit

Under some limited circumstances, an operation that meets the definition of a Large CAFO might not be required to obtain an NPDES permit. Large CAFOs that do not have the potential to discharge do not need NPDES permits. A Large CAFO is not required to apply for an NPDES permit if (1) the owner/operator has provided evidence to the permitting authority that there is no potential for the operation to discharge manure, litter, or process wastewater to surface waters; (2) the permitting authority agrees; and (3) the permitting authority has provided notice that the CAFO has "no potential to discharge" manure, litter, or process wastewater. "No potential to discharge" means that the CAFO must not discharge manure, litter, or process wastewater from either the production areas or any land application areas to surface waters, even by accident or because of human error. A large CAFO may qualify for a "no potential to discharge" determination if:

- The owner or operator can show that there is no possibility for any CAFO manure, litter, or wastewater to be added to surface waters under any circumstances or conditions and
- The operation has not had a discharge for at least the past 5 years.

The "no potential to discharge" determination is intended to provide relief where there truly is no potential for a Large CAFO's manure or wastewater to reach surface waters under any circumstances or conditions. For example, the operator of a CAFO that meets the following conditions might be able to demonstrate to the permitting authority that the CAFO has no potential to discharge:

- Located in an arid or semiarid environment.
- Stores all its manure or litter in a permanent, covered containment structure that precludes wind dispersal and prevents precipitation from contacting the manure or litter.
- Has sufficient containment to hold all process wastewater and contaminated storm water.

- Does not land apply CAFO manure or litter because, for example, the CAFO sends all its manure or litter to a regulated, off-site fertilizer plant or composting facility.

The "no potential to discharge" determination is not available to medium AFOs because the existence of a discharge is incorporated into the definition of a Medium CAFO. Small operations may become CAFOs only through designation, so the determination is not applicable.

NPDES Permit Effluent Limitations and Standards for CAFOs

Section 301 of the Clean Water Act prohibits the discharge of pollutants from a point source into waters of the United States except in accordance with an NPDES permit. Effluent limitations are the primary mechanism in NPDES permits for controlling discharges of pollutants to receiving waters. The CAFO ELGs are at 40 CFR Part 412.

Applicable Technology Standards for CAFOs

The CAFO ELGs, published on February 12, 2003, are applicable to only those operations that meet the regulatory definition of a Large CAFO. The CAFO ELGs establish the technology-based effluent limitations and standards for Large CAFOs. Table 16-15 provides the specific regulatory citations of the ELGs applicable to each animal sector. In the case of Medium and Small CAFOs, the permit writer develops effluent limitations (including the technology-based limitations and standards) on a case-by-case basis. The authority to issue case-by-case permit limitations comes from section 402(a)(1) of the CWA and 40 CFR 122.44(a) and 125.3. These case-by-case effluent limits are referred to as best professional judgment (BPJ) permit limitations.

Permit limitations are based on BPJ when national ELGs that apply to the appropriate industrial category, or to the particular process involved, have not been issued. For example, there are no ELGs for Small or Medium CAFOs or for "exotic" animal species, and there are no applicable ELGs for the land application areas at large horse, sheep, or duck CAFOs.

It is important for the compliance inspector to recognize that the CAFO ELGs do not address some discharges that might occur at a CAFO, such as discharges of plate chiller water and filter backwash water; pollutants (such as manure, feathers, and feed) that have fallen to the ground immediately downwind from confinement building exhaust ducts and ventilation fans and are carried by storm water runoff to waters of the United States; and discharges associated with the use of disinfectants in the production area. If these potential discharge sources are present, the inspector should determine whether they have been included in the ELGs specified in the permit (through the use of BPJ by the permit writer) and whether any discharges to waters of the United States have occurred in violation of CWA requirements.

Table 16-15. Effluent Limitations Summary

Animal Sector	ELG Technology-Based Limits
Large CAFOs	40 CFR Part 412
Subpart A - Horses and sheep	40 CFR 412.13
Subpart B - Ducks	40 CFR 412.22
Subpart C - Dairy cows and cattle other than veal calves	40 CFR 412.33 and 412.37
Subpart D - Swine, poultry, and veal calves	40 CFR 412.45 and 412.47
Medium CAFOs - Horses, sheep, duck, dairy cows, cattle, swine, poultry, and veal calves	BPJ
Small CAFOs - Horses, sheep, duck, dairy cows, cattle, swine, poultry, and veal calves	BPJ
Other CAFOs - Alligators, geese, emus, ostriches, mink, bison, etc.	BPJ

Technology-based ELGs for Large CAFOs

The ELGs address two main areas of Large CAFOs—the production area and the land application areas. The following sections describe the requirements that will be included in permits for CAFOs that are subject to the ELGs. In some cases the permitting authority might include additional effluent limitations in the permit.

Production Area ELG Requirements for Existing Large CAFOs

The production area of the CAFO includes the animal confinement area, the manure storage area, the raw materials storage area, and the waste containment areas. No discharges of manure, litter, or wastewater from the production area of the CAFO may enter waters of the United States. In addition, the CAFO must comply with specific record-keeping requirements.

The ELG requirements for Large CAFOs do allow a discharge caused by rainfall events, but only if the facility meets certain conditions. Dry-weather discharges are never allowed. Discharges from the production areas of a Large horse, sheep, beef, dairy, swine, turkey, or chicken CAFO are allowed if the operation meets all the following conditions:

- The production area must be designed, built, operated, and maintained to handle all the manure, litter, and process wastewater, including the runoff and direct precipitation (rain) from all normal rainfall events up to a *25-year, 24-hour rainfall event*. To meet this requirement, the design volumes of the storage structures need to account for the following:
  - ✓ The maximum length of time before emptying the structures (the storage period).
  - ✓ All waste accumulated during the storage period.
  - ✓ Normal precipitation and evaporation during the storage period.
  - ✓ Normal runoff during the storage period.
  - ✓ The direct precipitation from a 25-year, 24-hour rainfall event.
  - ✓ The runoff from a 25-year, 24-hour rainfall event.
  - ✓ Residual solids after liquid has been removed.
  - ✓ Necessary freeboard to maintain storage integrity.

- ✓ For treatment lagoons, a minimum treatment volume and any additional storage needed to meet management goals or other regulatory requirements.
- The discharge may consist of only overflows caused by the rainfall event. Dry-weather discharges are not allowed.
- The operation must comply with all record-keeping requirements specified in the ELGs. (The specific requirements are discussed later in this section.) If the operation is not keeping the required records, no discharges are allowed.

Discharges caused by poor operation or management are never allowed, even if it is raining. The regulation requires that the production area must be properly designed, constructed, operated, and maintained. Proper design and operation includes designing lagoons for the rainy season, draining lagoons before the rainy season begins, and not applying manure to saturated soils or during rain events. Proper operation and maintenance also includes activities such as dewatering when appropriate and in accordance with a nutrient management plan. Occasionally a series of rainfall events that are far above normal rainfall might occur so close together that they prevent dewatering. Under such conditions, even though storage structures have been properly designed, constructed, and managed, a series of small storms could however, cause a permissible overflow. With proper planning and maintenance, however, the operation should usually be able to avoid these situations.

Production Area ELG Requirements for New Source Large CAFOs

Some new CAFOs designed and built after April 14, 2003, are subject to more stringent ELG requirements for the production area. (No additional requirements apply to the land application areas for new source CAFOs.) For additional information concerning the requirements for new sources, refer to the *NPDES Permit Writers' Guidance Manual and Example NPDES Permit for CAFOs*.

Production Area Additional Measures and Record-keeping Requirements for All Large CAFOs

The following is a general summary of additional measures and record-keeping requirements for the production area that are applicable to all Large CAFOs. The specific requirements are listed in 40 CFR 412.37(a) and (b). The NPDES permit for Large CAFOs will include the following additional measures and record-keeping requirements:

- Routine visual inspections of the CAFO production area. At a minimum the following visual inspections must be performed:
  - ✓ Weekly visual inspections of all storm water diversion devices, runoff diversion structures, and devices channeling contaminated storm water to the wastewater and manure storage and containment structure.
  - ✓ Daily visual inspections of all water lines, including drinking water or cooling water lines.
  - ✓ Weekly inspections of the manure, litter, and process wastewater impoundments. The inspection will note the level in liquid impoundments as indicated by the depth markers.
  - ✓ Any deficiencies found as a result of these inspections must be corrected as soon as possible.
- Installation of depth markers in all open-surface liquid impoundments (excluding for example, in under-house pits) that clearly indicate the minimum capacity necessary to contain the runoff and direct precipitation of the 25-year, 24-hour rainfall event or the 100-year, 24-hour rainfall event, whichever is applicable.

- No disposal of animal mortalities in any liquid manure or process wastewater systems and the handling of animal mortalities so as to prevent discharge of pollutants to waters of the United States, unless alternative technologies pursuant to 40 CFR 412.31(a)(2) and approved by the Director of the permitting authority are designed to handle mortalities.
- Complete on-site records documenting implementation of all required additional measures and any other records specified by the permitting authority. The specific records required by the CAFO ELGs and the NPDES CAFO regulations are discussed later in this section.

Land Application Area Requirements for Large Beef Cattle, Dairy Cattle, Veal Calf, Swine, Turkey, and Chicken CAFOs

The land application area is any land that is under the control of the CAFO owner or operator — regardless of whether it is owned, rented, or leased — and to which manure or process wastewater from the production area is (or might be) applied. For example, if the CAFO applied litter to field "A" last year and does not intend to apply litter there again until next year, that field is still part of the CAFO's land application area for purposes of the nutrient management plan. The land application requirements are the same for existing and new sources. The land application requirements specified in the CAFO ELGs (40 CFR 412.4) are applicable to all Large beef cattle, dairy cattle, veal calf, swine, turkey, and chicken CAFOs (Large CAFOs subject to 40 CFR Part 412, Subparts C and D).

The CAFO ELGs require that all Large beef cattle, dairy cattle, veal calf, swine, turkey, and chicken CAFOs properly apply manure, litter, or wastewater to land application areas under the control of the CAFO operator. This is done by implementing best management practices (BMPs) developed in accordance with a nutrient management plan. The CAFO's nutrient management plan must be designed to achieve realistic production goals, while minimizing nitrogen and phosphorus movement to surface waters.

Even though the CAFO ELGs do not set land application area requirements for horse, sheep, or duck CAFOs, NPDES permits for these operations will require land application BMPs as part of the nutrient management plan. (See NPDES CAFO permit special conditions that are applicable to all CAFOs).

Large beef cattle, dairy cattle, veal calf, swine, turkey, and chicken CAFOs must also implement the following BMPs and any other BMPs required by their permits (as specified in the ELGs):

- Land apply manure, litter, and process wastewater in accordance with a nutrient management plan that specifies application rates for each field. The permitting authority will establish technical standards that must be used to determine land application rates.
- At least once a year, collect representative samples of manure, litter, and other wastewater and analyze them for nutrient content, including nitrogen and phosphorus.
- At least once every 5 years, collect representative soil samples from all fields where manure, litter, and process wastewater are applied and analyze them for phosphorus content.
- Maintain a setback area within 100 feet of any down-gradient surface waters, open tile intake structures, sinkholes, agricultural well heads, or other conduits to surface waters where manure, litter, and other wastewaters are not applied. As a

compliance alternative, the CAFO may elect to establish a 35-foot vegetated buffer where manure, litter, and other wastewater are not applied. The CAFO owner or operator may demonstrate to the permitting authority that a setback or vegetated buffer is unnecessary because of site-specific conditions or practices.

- Periodically conduct leak inspections of equipment used for land application of manure, litter, or wastewater.

If a CAFO has a permit and is in full compliance with the permit, which includes properly developing and implementing the nutrient management plan, precipitation-related runoff from the land application area is an allowable discharge. On the other hand, if a CAFO does not have a permit or does not have a nutrient management plan, or the CAFO operator does not follow the nutrient management plan when applying manure, litter, and process wastewater, a discharge from the land application area of the CAFO is a violation of the Clean Water Act.

Technical Standard for Nutrient Management

The ELG determination of appropriate application practices for manure, litter, and process wastewater must be done in accordance with the technical standards established by the permitting authority. These technical standards guide the development of the site-specific nutrient management plan and must include a field-specific assessment of the potential for nitrogen and phosphorus transport from the field to waters of the United States. In addition, the standards must address the form, source, amount, timing, and method of application of nutrients on each field to achieve realistic production goals, while minimizing nitrogen and phosphorus movement to waters of the United States. The technical standards for nutrient management are also to include appropriate flexibility for any CAFO to implement nutrient management practices to comply with the standards.

The NPDES compliance inspector should verify that the permittee has used the nutrient management technical standard established by the permitting authority to develop and implement the site-specific nutrient management plan.

NPDES Permits for CAFOs: Special Conditions

The CAFO regulations establish two special conditions that must be included in all NPDES CAFO permits and one additional special condition applicable to only Large CAFOs. In addition, the permitting authority may include other special conditions in the NPDES permit.

Special Condition for All CAFOs: Develop and Implement a Nutrient Management Plan

The NPDES CAFO regulations specify that the NPDES permit for any CAFO must include a special condition requiring the CAFO, regardless of size, to develop and implement a nutrient management plan. The goal of the nutrient management plan is to minimize the CAFO's impact on water quality. The plan must describe the practices and procedures that will be implemented at the operation to meet all the production area and land application area requirements that apply.

The nutrient management plan must address land application of manure and wastewater on all land under the operational control of the CAFO operator or owner. Operational control of land includes ownership, rental agreements, leases, and access agreements.

Certified Specialists and Nutrient Management Plans

EPA's CAFO regulations do not mandate that the required site-specific nutrient management plan be developed by a certified specialist or technical service provider. However, compliance inspectors should view the use of these professionals favorably when determining whether the plan complies with permit requirements (ELGs and NPDES minimum practices).

A certified specialist is a person who has a demonstrated capability to develop Nutrient Management Plan (NMPs) in accordance with applicable U.S. Department of Agriculture (USDA) or state standards and is certified by USDA or a USDA-sanctioned organization. States have the discretion to require the use of such specialists to prepare or approve plans.

Requirements for Updating Nutrient Management Plans

CAFOs are dynamic operations where changes to the operational practices are made continually. The site-specific nutrient management plan needs to reflect the current operational practices of the CAFO and for that reason will need to be modified and updated. The compliance inspector should verify that the nutrient management plan is being updated in accordance with permit requirements. At a minimum NPDES permits for CAFOs should require that nutrient management plans be reviewed and updated at the time of permit renewal. The *NPDES Permit Writers' Guidance Manual and Example Permit for CAFOs* includes a recommendation that NPDES permits for CAFOs also specify that the nutrient management plan be updated (1) when the CAFO makes a substantive change in how it manages operations, including the location, method, timing, or frequency of land application, and significant changes to crop rotations or yearly cropping patterns, or (2) when a discharge occurs in violation of the CAFO's NPDES permit.

Special Condition for All CAFOs: Address Minimum Practices

The nutrient management plan must include BMPs and procedures necessary to implement the applicable ELGs for CAFOs. The nutrient management plan must also include, to the extent applicable, a set of minimum practices (see 40 CFR 122.42(e)(1)(i–ix). These NPDES nutrient management plan minimum practices are as follows:

- Ensure adequate storage of manure, litter, and process wastewater, including procedures to ensure proper operation and maintenance of the storage facilities.
- Ensure proper management of mortalities (dead animals) to ensure that they are not disposed of in a liquid manure, storm water, or process wastewater storage or treatment system that is not specifically designed to treat animal mortalities.
- Ensure that clean water is diverted, as appropriate, from the production area.
- Prevent the direct contact of confined animals with waters of the United States.
- Ensure that chemicals and other contaminants handled on-site are not disposed of in any manure, litter, process wastewater, or storm water storage or treatment system unless the system is specifically designed to treat such chemicals or contaminants.

- Identify appropriate site-specific conservation practices to be implemented, including as appropriate buffers or equivalent practices, to control runoff of pollutants to waters of the United States.
- Identify protocols for appropriate testing of manure, litter, process wastewater, and soil.
- Establish protocols to land apply manure, litter, or process wastewater in accordance with site-specific nutrient management practices that ensure appropriate agricultural utilization of the nutrients in the manure, litter, or process wastewater.
- Identify specific records that will be maintained to document the implementation and management of the minimum elements described above.

The *NPDES Permit Writers' Guidance Manual and Example Permit for CAFOs* states that permitting authorities are to include these nine minimum practices in NPDES permits as stand-alone, enforceable special conditions to help ensure these requirements are ultimately met [see also CWA§402(a)(1) and (2)]. The NPDES CAFO regulations require that these practices be fully implemented by the date specified in the permit, but no later than December 31, 2006.

Table 16-16 provides recommended permit conditions to achieve each of the minimum practices as specified in the *NPDES Permit Writers' Guidance Manual and Example Permit for CAFOs*. The specific minimum practices incorporated into a permit as special conditions by the permit authority may differ from those in Table 16-16, but in all cases the special conditions must be in accordance with the minimum practices specified at 40 CFR 122.42(e)(1)(i–ix).

Table 16-16. NPDES CAFO Permit Minimum Practices
ENSURE ADEQUATE STORAGE[1] CAPACITY Develop and implement specific practices and associated structures to ensure adequate storage capacity to achieve permit limitations including: - Maintain sufficient capacity in liquid manure, wastewater, or storm water storage structures to ensure compliance with all permit requirements. - Store dry manure in production buildings or in storage facilities or otherwise store it in such a way as to prevent polluted runoff. - Provide adequate storage capacity to ensure compliance with the nutrient management technical standard approved by the permitting authority. - Ensure proper operation and maintenance of all manure, wastewater, and storm water storage facilities.
ENSURE PROPER MANAGEMENT OF MORTALITIES Handle and dispose of dead animals in a manner that prevents contamination of waters of the United States.
DIVERSION OF CLEAN WATER Develop and implement management practices to divert clean water from the production area. Clean water includes rain falling on the roofs of facilities, runoff from adjacent land, and other sources. If clean water is not diverted from coming into contact with manure or process wastewater, it must be collected in accordance with permit requirements.
PREVENTION OF DIRECT CONTACT OF ANIMALS WITH WATERS OF THE UNITED STATES Develop and implement appropriate controls to prevent access of animals to waters of the United States in the production area.
CHEMICAL HANDLING Develop and implement controls to prevent the inappropriate introduction of chemicals into the manure, wastewater, and storm water storage and handling system. Examples include pesticides, hazardous and toxic chemicals, and petroleum products and by-products.
CONSERVATION PRACTICES TO CONTROL NUTRIENT LOSS For land application areas under the control of the CAFO operator, develop and implement practices that are sufficient to minimize the discharge of pollutants to waters of the United States. These practices may include, but are not limited to, residue management, conservation crop rotation, grassed waterways, strip cropping, vegetated buffers, riparian buffers, setbacks, terracing, and diversions.

Table 16-16. NPDES CAFO Permit Minimum Practices
PROTOCOLS FOR MANURE AND SOIL TESTING Identify and implement specific manure, wastewater, and soil sample collection and analysis protocols to be used in developing and implementing the nutrient management plan. At a minimum the protocol is to specify the collection and analysis of manure, litter, and other process wastewaters annually for nutrient content, including nitrogen and phosphorus. The protocol is to specify the collection and analysis of soil samples for phosphorus content at least once every 5 years for all fields under the control of the CAFO operator where manure and wastewater might be applied. In all cases the sampling frequency for both manure, litter, and wastewater and soil is to be consistent with the technical standard for nutrient management established by the Director.
PROTOCOLS FOR THE LAND APPLICATION OF MANURE AND PROCESS WASTEWATER Develop and implement protocols to apply manure, litter, and process wastewater in accordance with the technical standard for nutrient management established by the Director.
RECORD KEEPING Maintain all records necessary to document the development and implementation of the nutrient management plan and compliance with the minimum practices defined in the permit. In addition, records that document compliance with the effluent limitations specified in the permit must be maintained .

Source: *NPDES Permit Writers' Guidance Manual and Example Permit for CAFOs,* December 2003.

[1] Storage includes waste ponds and lagoons and other structures such as tanks (above and below ground) and staking facilities (concrete pad, walls, and a roof).

Duty to Maintain Permit Coverage Until the CAFO Is Properly Closed

NPDES permit coverage must be maintained until the facility has ceased operation or is no longer a CAFO and the permittee has demonstrated to the satisfaction of the permitting authority that there is no remaining potential for a discharge of the manure, litter, or process wastewater that was generated while the operation was a CAFO, other than agricultural storm water from land application areas.

Once an operation is issued an NPDES permit, that permit remains in place for the entire permit term independent of the specific number of animals confined at any one time until the permit is modified or terminated in accordance with applicable NPDES regulations.

Special Condition for Large CAFOs: Meet Manure Transfer Requirements

NPDES permits for Large CAFOs must include specific requirements concerning the transfer of manure, litter, or process wastewater to other persons. The permit must require the operator to provide all recipients of manure and wastewater generated by the CAFO with the most current manure nutrient analysis. These records are to be maintained for a period of 5 years from the date the manure, litter, or process wastewater is transferred.

NPDES Permit for CAFOs: Monitoring, Reporting, and Record-Keeping Requirements

This section includes all the record-keeping, monitoring, and reporting requirements for Large CAFOs. Table 16-17 is an integrated list of the records required by the NPDES CAFO regulation and ELGs for Large CAFOs. In addition, the permitting authority may include record-keeping requirements beyond those specified in Table 16-17. For Medium and Small CAFOs, the regulations require only that the records include the site-specific nutrient management plan and any records necessary to document compliance with each NPDES nutrient management

plan minimum practice. Records associated with the ELGs for these operations would be defined in the permit because the ELGs for these operations are established by the permit writer using BPJ.

Table 16-17. NPDES Large CAFO Permit Record-Keeping Requirements

Parameter	Units	Frequency
Nutrient Management Plan ***(Note: Required by the NPDES CAFO Regulation – applicable to all CAFOs)***		
The CAFO must maintain on-site a current site-specific nutrient management plan that reflects existing operational characteristics. The operation must also maintain on-site all necessary records to document that the plan is being properly implemented with respect to manure and wastewater generation, storage and handling, and land application. In addition, records are to be maintained to show that the development and implementation of the nutrient management plan are in accordance with the minimum practices defined in 40 CFR 122.42(e).	N/A	Maintain at all times
Soil and Manure/Wastewater Nutrient Analysis ***(Note: Required by the CAFO ELGs – applicable to Large CAFOs)***		
Analysis of manure, litter, and process wastewater to determine nitrogen and phosphorus content.[1]	Parts per million (ppm) Pounds/ton	Conduct initial sampling, then at least annually
Analysis of soil in all fields where land application activities are conducted to determine phosphorus content.[1]	ppm	Conduct initial sampling, then at least once every 5 years
Operation and Maintenance ***(Note: Required by the CAFO ELGs – applicable to Large CAFOs except as noted)***		
Visual inspection of all water lines.	N/A	Daily[2]
Documentation of depth of manure and process wastewater in all liquid impoundments.	Feet	Weekly
Documentation of all corrective actions taken.	N/A	As necessary
Documentation of animal mortality handling practices.	N/A	As necessary
Design documentation for all manure, litter, and wastewater storage structures, including the following information:		
- Volume for solids accumulation - Design treatment volume - Total design storage volume[3] - Days of storage capacity	Cubic yards/ gallons Cubic yards/ gallons Cubic yards/ gallons Days	Once in the permit term unless revised
Documentation of all overflows from all manure and wastewater storage structures, including the following: ***(Note: Required by the NPDES Regulation – applicable to all CAFOs)***		
- Date and time of overflow - Estimated volume of overflow - Analysis of overflow (as required by the permitting authority)	Month/day/year Total gallons TBD	Per event Per event Per event
Documentation of manure application equipment inspection.	N/A	Seasonally
Land Application ***(Note: Required by the CAFO ELG – applicable to Large CAFOs)***		

Table 16-17. NPDES Large CAFO Permit Record-Keeping Requirements

Parameter	Units	Frequency
For each application event where manure, litter, or process wastewater is applied, documentation of the following by field:		
- Date of application	Month/day/year	Daily
- Method of application	N/A	Daily
- Weather conditions at the time of application and for 24 hours prior to and following application	N/A	Daily
- Total amount of nitrogen and phosphorus applied[4]	Pounds/acre	Daily
Documentation of the crop and expected yield for each field.	Bushel/acre	Seasonally
Documentation of test methods and sampling protocols used to sample and analyze manure, litter, wastewater, and soil.	N/A	Once in the permit term unless revised
Documentation of the basis for the application rates used for each field where manure, litter, or wastewater is applied.	N/A	Once in the permit term unless revised
Documentation showing the total nitrogen and phosphorus to be applied to each field, including nutrients from the application of manure, litter, and wastewater and other sources.	Pounds/acre	Once in the permit term unless revised
Manure Transfer *(Note: Required by the NPDES CAFO Regulation –applicable to Large CAFOs)*		
For all manure transfers the CAFO must maintain the following records:		
- Date of transfer	N/A	As necessary
- Name and address of recipient	N/A	As necessary
- Approximate amount of manure, litter, or wastewater transferred	Tons/gallons	As necessary

[1] Refer to the state nutrient management technical standard for the specific analyses to be used.
[2] Visual inspections should take place daily during the course of normal operations. The completion of such inspection should be documented in a manner appropriate to the operation. Some operations might wish to maintain a daily log. Other operations might choose to make a weekly entry, when they update other weekly records, that required daily inspections have been completed.
[3] Total design volume includes normal precipitation less evaporation on the surface of the structure for the storage period; normal runoff from the production area for the storage period; 25-year, 24-hour precipitation on the surface of the structure; 25-year, 24-hour runoff from the production area; and residual solids.
[4] Including quantity/volume of manure, litter, or process wastewater applied and the basis for the rate of phosphorus application.

Monitoring and Reporting

NPDES permits for CAFOs incorporate monitoring and reporting requirements consistent with the minimum reporting requirements at 40 CFR Part 122.41(l). The permit may also include monitoring and reporting requirements that address nonroutine activities. For example, discharges at a CAFO can occur because of an overflow during a catastrophic storm event (which can be an allowable discharge under the terms of the permit) or a leak, breach, overflow, or other structural failure of a storage facility due to improper operation, design, or maintenance (which would be an unauthorized discharge). Unauthorized discharges can also occur due to manure releases related to the improper storage or handling of liquid or solid manure, or improper land application. NPDES CAFO permits will require notification (within specific time frames) of the permitting authority, specific data collection activities, and a follow-up report describing such discharges. The monitoring and reporting requirements must ensure that the permittee provides a description; identifies the time and duration of the event, as well as the cause(s); and presents an analysis (if required to determine compliance by the permitting authority) of the discharge. The NPDES CAFO permit guidance recommends the analysis include, at a minimum, total nitrogen, ammonia nitrogen, phosphorus, pH, temperature,

Escherichia coli or fecal coliform bacteria, 5-day biochemical oxygen demand (BOD_5), and total suspended solids. The analysis is to be performed in accordance with approved EPA methods for wastewater analysis listed in 40 CFR Part 136. The permitting authority may specify additional parameters at its discretion.

Annual Report

All NPDES permits for CAFOs will include a requirement for the permittee to submit an annual report to the permitting authority with specific information defined in the regulation [40 CFR 122.42(e)(4)]. The annual reports submitted by permitted operations will yield valuable information for the compliance inspectors and should be reviewed before conducting an inspection.

16. C. CAFO Inspection Overview

This section provides a general overview of the purpose of AFO/CAFO inspections, the authority for EPA to conduct these inspections, and how facilities are selected for inspection. A brief summary of the implementation plan for the revised CAFO regulations is also included. In addition, this section provides a general overview of the process of a CAFO inspection and the safety and bio-security issues that might be encountered.

Purpose of AFO/CAFO Inspections

An inspection at an animal feeding operation is typically a compliance evaluation inspection, in which the facility is being inspected to determine whether it is complying with the requirements of the CWA. Another purpose of an AFO/CAFO inspection is to evaluate whether the requirements of any other federal environmental laws are applicable to the facility and, if so, whether the facility is in compliance with such requirements. An inspection of an AFO or CAFO may be conducted for the following reasons:

- Compliance inspection at a permitted facility to evaluate the facility's compliance with the requirements of its NPDES permit.
- Inspection at a nonpermitted AFO to determine whether the facility meets the basic definition of a CAFO, whether the facility has caused or is likely to cause water pollution, and whether the facility should have an NPDES permit.
- Routine inspection.
- To follow up on a citizen tip or complaint.
- For case development support after a violation has been identified.
- To determine whether a facility should be designated as a CAFO.
- For a follow-up inspection to ensure that the permittee has implemented required controls or BMPs.
- Compliance inspection to ensure compliance with settlement requirements.

EPA Authority for AFO/CAFO Inspections

EPA has the authority to regulate and inspect CAFOs through statutory requirements established in the CWA:

- 40 CFR 122.23 defines CAFOs as point sources subject to the NPDES permitting program.
- 40 CFR 123.26 establishes procedures and objectives for routine inspections of NPDES-permitted facilities by state programs.
- Section 402 of the CWA states that permittees issued permits for point source discharges of pollutants must meet specific discharge limits and operating conditions.
- Section 308 of the CWA authorizes inspections and monitoring to determine whether NPDES permit conditions are being met.
- Under the CWA, EPA may conduct an inspection wherever there is an existing NPDES permit, where a discharge exists or might exist, and where no permit has been issued. The CWA established enforcement authorities. EPA retains independent authority to take enforcement actions in both authorized and unauthorized states.

- Section 309(a) allows EPA to administer administrative compliance orders for persons violating the CWA and to set a reasonable schedule for compliance (violation notice).
- Section 309(g) allows EPA to assess administrative penalties of two classes. Administrative actions may preclude other civil action penalties or citizen suits.
  - –Class I, with an informal hearing process, can carry penalties of up to $25,000.
  - –Class II involves formal administrative procedure hearings with penalties of up to $125,000.
- Sections 309(b) and (d) and 404 provide for injunctive relief and civil penalties of up to $25,000 per day for each violation of the act.
- Section 309(c) provides for criminal penalties of a fine of $2,500 to $25,000 per day, or up to 1 year of imprisonment, or both, for negligent violations of the act (for subsequent convictions, fines of up to $50,000 per day or 2 years of imprisonment, or both, may be called for).

Selection of Facilities for Inspection

Although, specific procedures will vary by EPA Region and by authorized state, the basic approach is similar. Some facilities are selected for inspection based on “probable cause,” which means that the regulatory agency has obtained specific evidence of a possible existing violation at a facility. Inspections are conducted in response to citizen complaints about a specific facility, emergency situations such as reports of ongoing spills, information about specific water quality problems or fish kills, or as a follow-up to prior inspections indicating violations at the same facility or at other facilities owned or operated by the same person. Facilities are also selected through the Neutral Administrative Inspection Scheme, in which the regulatory agency does not have any prior information indicating that there are existing violations. These are routine inspections to evaluate compliance. Facilities are selected using the Neutral Administrative Inspection Scheme, and priority should be given to facilities that meet one or more of the following criteria:

- Are Large CAFOs
- Are in priority watersheds impaired by runoff from AFOs
- Are subject of citizen or government tips and complaints
- Are in watersheds with high AFO or CAFO density
- Are near surface waters
- Have the potential for large amounts of animal waste to reach surface water

CAFO Permitting and Compliance Strategy

The EPA CAFO Permitting and Compliance Strategy was developed in the summer of 2003 to address the permitting, compliance, and enforcement efforts by EPA (headquarters and regions) and states to ensure that the following actions occur:

- Permit authorities revise their regulations
- CAFOs are provided with effective compliance assistance support
- CAFOs are issued NPDES permits and develop nutrient management plans by December 2006
- Inspections and enforcement actions occur when necessary

The strategy covers the 5-year period beginning with the publication of the final CAFO regulations in February 2003. The CAFO Implementation Plan provides for the following:

- The use of tailored approaches at the state level that reflect the specific status of their existing CAFO program. Encouraging interagency cooperation and coordination by partnering with USDA where appropriate.
- Regions taking leadership in working with their states to develop regional implementation plans that reflect both state and federal priorities to ensure a consistent national approach.
- Taking the necessary steps to improve the quality of information in the Permit Compliance System concerning CAFO permits.
- The development of a system that is focused on program progress and addresses emerging problems. This part of the strategy will focus on the identification and tracking of specific deadlines for permitting authorities to complete necessary program revisions, issue permits, and develop compliance assistance programs.
- Outreach and coordination with stakeholders to provide timely compliance assistance information on regulatory requirements.
- Issuance of guidance to facilitate permit issuance, development and implementation of nutrient management plans, and the approval of alternative technologies by permitting authorities.
- The development of measures of success and targeted evaluation tools.

General Process of an Inspection

Pre-Inspection Activities

The primary role of the inspector is to gather information that can be used to evaluate compliance with permit conditions, applicable regulations, and other requirements. Inspectors should be familiar with the conditions of the specific permit and with all applicable statutes and regulations. Prior to conducting a CAFO inspection, the inspector should complete the following specific pre-inspection preparation activities:

- Become familiar with the facility location and its geographic features.
- Review the conditions of the permit.
- Review prior inspection notes and issues, along with any previous site entry problems.
- Review prior compliance problems, enforcement actions, and correspondence.
- Answer these questions: Does the facility require extra safety requirements? Will biohazards be an issue?
- Determine whether there any potential bio-security issues at the facility.

To facilitate the CAFO inspection process, a detailed checklist based on the NPDES CAFO regulations and CAFO ELGs requirements has been developed. The checklist is useful in collecting information associated with the nutrient management plan and the minimum practices. It is included in Appendix AA.

Onsite Activities

Upon arrival at the facility, the inspector must show credentials as a form of identification to gain access. To conduct the inspection, the inspector uses an inspection checklist, a notebook for field notes, and a camera to take photographs. The inspectors should ask to see the CAFO owner or operator, or the designated representative for the facility. The typical sequence of events that occur during the inspection is as follows:

- Entry interview

- Record and document review
- Facility tour
- Exit interview

Some portions of the inspection can be completed without the assistance or accompaniment of the facility representative. Although most inspections are unannounced, CAFO inspectors should be aware that they might have to call the facility prior to the time of inspection to announce their arrival because small farm operators might not be able to stop production and assist the inspector with the inspection process. In addition, the inspector might need to know the facility's bio-security procedures before the time of inspection. The inspector should be able to determine compliance with a permit or the CAFO status of a facility with an unannounced inspection.

Entry Interview

The purpose of the entry interview is for the inspector to

- Present credentials authorizing the inspection.
- Seek consent for an on-site inspection.
- Inform the facility owner or operator of the scope and purpose of the inspection.
- Provide a copy of the NPDES regulations or other fact sheets concerning the regulation of CAFOs.
- Ask basic information about the facility. Information and documents that the inspector should request include the following:
  - Verification of the name, address, and telephone number of the facility.
  - A determination of who is the authorized representative for the facility.
  - A determination of whether the facility is being leased, along with the names, addresses, and telephone numbers of the lessor and lessee.
  - Copies of specific records that might be required by the permit.
  - Questions concerning the history of the facility, including any discharges that might have occurred.
  - A determination of conditions as they exist at the time of the inspection.
- If desired, inform the operator what information, if any, will be available at the conclusion of the inspection.

The inspector should ask the facility owner or operator questions about the management and control of wastes from maintenance facilities, releases of chemicals to the environment, bulk fuel storage, pesticide usage, and other issues specified in the permit.

Record and Document Review

The inspector should also ask to see the records required to be kept by the facility's permit, the specific management plans, and the records to verify that the facility is complying with the terms and conditions of its permit. The inspector may ask to see all records or may ask for just a random sample to evaluate.

Typical records that the inspector may ask the facility to produce include the following:

- Animal inventory records.
- Records of waste levels in the retention structure.
- Manure and wastewater application records such as the following:
  - Date(s) of application
  - Location(s) of applications

  - Crop rotations
  - Soil, manure, and wastewater nutrient testing results
- NPDES permit for the facility.
- Lease(s) or rental agreements.
- "Spreading agreements" if wastes are applied on land not owned or leased by the facility.
- Construction plans or as-built drawings of the facility.
- Nutrient management plan.

As needed, the inspector should ask to photocopy documents that will assist in preparing the inspection report. These documents may include a site map of the facility, drainage information, discharge reports, or other facility documentation.

Facility Tour

After reviewing the records and documents, the inspector asks the facility representative to accompany him or her on a tour of the facility. The purpose of the site tour is to assess existing conditions and confirm that the facility conforms to the description in the permit. During this phase of the inspection, the inspector might want to observe the following portions of the facility to assess structural integrity, maintenance condition, and storage availability:

- Solids sedimentation basins
- Manure and wastewater handling equipment
- Waste retention structures
- Catch basins
- Floor drains
- Fuel storage areas
- Depth markers and required liquid levels
- Maintenance facilities
- Runoff storage structures

To document the findings of the inspection, the inspector should photograph or videotape aspects of the operation. If the facility is discharging during the course of the inspection or there is evidence that the facility has recently discharged, the inspector might also take samples. During the course of the facility tour, the inspector might determine that additional records or documents need review. The inspector should ask the facility representative as soon as this has been determined to facilitate the retrieval of the needed information.

Exit Interview

Following the facility tour, the inspector conducts a debriefing or exit interview with the facility representative. This phase of the inspection allows both parties to follow up on the inspection or to clarify issues that arose during the inspection. If any records or documents were obtained during the inspection, the inspector prepares a Receipt for Documents and Samples. The inspector also gives the facility the opportunity to claim that some or all of the information provided during the inspection is confidential business information (CBI).

The inspector may relay basic findings of the inspection. If the inspector needs additional information from the facility or if another entity will complete the evaluation, the inspector might not be able to provide a list of the findings during the inspection. The inspector does not make the determinations of compliance or noncompliance of the facility; that determination is made by

other enforcement personnel of the regulatory agency. Once the inspector has reviewed all the information obtained during the inspection, an inspection report is prepared. The inspection report includes the inspection checklist, documentation copied during the inspection, an explanation of findings, and supporting photographs. In some cases, the inspector might need to contact the facility if additional information is needed or issues require clarification.

Compliance personnel for the regulatory authority review the inspection report and evaluate whether the facility is in noncompliance and what type of follow-up action, if any, is appropriate. Copies of the report are sent to the inspected facility. EPA responds to noncompliance in a number of different ways, depending on the nature and circumstances of the violation:

- No follow-up needed
- Letter notifying the facility of violations or compliance assistance
- Administrative compliance order
- Administrative compliance order plus administrative penalty
- Civil judicial enforcement action (penalties and/or injunctive relief)
- Criminal enforcement

CAFO Operational Overview

This section presents a brief synopsis of several operations that might take place at a CAFO and some of the elements to note when conducting an inspection. Additional site-specific processes that are beyond the scope of this document might be encountered. When inspecting a facility, the following areas are of concern: animal housing, feeding, and maintenance areas; manure and process wastewater collection and transport; manure and process wastewater storage and treatment; and manure and process wastewater land application.

Animal Housing, Feeding, and Maintenance Areas

Housing areas can be indoor facilities with concrete, metal grate, gravel, clay, or packed earth flooring; outdoor areas with dirt surfaces; or pastureland or rangeland. Pasture areas are not subject to regulation as part of a CAFO except with respect to their use as manure application sites. Livestock housing areas are particularly susceptible to runoff and erosion because of the concentrated populations of manure-producing animals. Soil compaction in soil-based yards (also called dry cow lots, loafing areas, or exercise yards) prevents water infiltration and causes ponding and runoff. Runon and runoff controls, such as grading and berms, are important components of pollution control and prevention in livestock housing areas. An inspector should note whether the animals are treated chemically for pests or if the bedding areas are cleaned chemically because of the potential for manure contamination by the pesticides. Bedding material, if provided, can consist of peat moss, sawdust, shredded newspaper, straw, or other materials.

Swine housing areas are often enclosed buildings, dirt lots, or outdoor concrete pads. Poultry housing areas are usually enclosed buildings.

Feeding areas inside buildings are often troughs; outside areas typically have a concrete, gravel, or packed-earth surface with troughs or a feed bunker. Although a water trough increases animal traffic in the immediate area, it is advantageous because it allows the operator to restrict access to (fence off) any streams previously used for livestock watering. Poultry houses use feeding bins or trays; water is provided continuously or through on-demand

systems such as nipple or cup drinkers.

Animals may spend time in non-pasture areas that are for neither housing nor feeding purposes. These areas may be for such activities as milking, shearing, birthing, breeding, or sales display. If these areas are not pasture, they are part of the CAFO. The inspector will need to observe manure management practices in these areas as well.

Manure and Process Wastewater Management Systems

Manure Collection

Dry manure is usually collected by being pushed, scraped, or scooped up. Slurry manure is generally collected by scraper or pumped after the addition of small amounts of water. Liquid manure is generally collected by flushing with large amounts of water. For indoor facilities, manure may be removed by an automated spraying system, a scraping system, a flushing system beneath the metal grates, or manual removal.

In poultry houses with dry manure systems, the manure that builds up adjacent to the feed and water devices forms a cake (crust). The collection and removal of that cake is called cake removal or crust-out. Poultry houses usually crust out the manure following each flock. A machine called a cruster is often used for this process in poultry houses. Poultry operations with liquid manure systems collect the manure in long pits underneath the birds' cages. Large earthmoving equipment is used to collect manure at large cattle feedlots. Beef cattle pens are usually cleaned after each set of cattle is marketed. Many enclosed swine operations house the hogs on a slotted floor that allows the manure and waste feed to drop through for removal. Manure pits capture the manure as it falls from the animals' containment area. Swine manure removal methods include under-floor flush, open-gutter flush, pit recharge, and hosing. Dairy facilities remove manure through slotted floors, use gutter cleaners or alley scrapers, or flush the alleys with water. Many dairies that remove manure by flushing also recycle this water for multiple flushes. Milking areas usually produce manure and process wastewater, which are generally channeled into the manure and process wastewater handling and storage system.

Manure Transport

The transport of manure is related to the solids content. Dry manure cannot be pumped; liquid manure cannot be scraped. Dry manure is usually transported directly to the land application site in a box-type manure spreader. Manure spreaders are commonly loaded by tractor bucket loaders or elevated conveyor units. Slurried and liquid manure can be pumped or flushed through pipes and concrete channels to storage or treatment processes. The pipes can be above or below the ground.

Slurry and liquid manure are often loaded into tank trucks or tractor-drawn tanks. Tankers are often loaded by stationary pumps, pumps located on a floating barge, and moveable pumps operated by a tractor PTO drive. Liquid manure is often transported by pumping through permanent and temporary piping to irrigation devices.

Manure Storage and Treatment

In most cases, manure is stored for some period between manure production and manure disposal. This storage can be long-term (180 days or more) or short-term. Manure storage is necessary where disposal or application immediately after collection and removal is impossible

or impractical. One such situation is avoiding the application of manure during poor meteorological conditions. For example, if manure is applied during the winter months, it is more likely that the melting snow and spring rains will wash away most of the nutrients before the ground thaws enough to absorb them. Manure is stored in three forms: solid, semisolid, and liquid.

Long-term storage usually consists of liquid or semisolid manure, and the storage vessels typically consist of lagoons or tanks made from glass-lined steel, concrete staves, poured concrete, or earthen waste storage pits. Manure is typically stored for a period of time, then applied to the land. The liquid or semisolid waste may be treated in a lagoon; the methane gas produced is reclaimed, and the remaining waste is applied to fields. Manure in lagoons is biodegraded by bacteria using aerobic or anaerobic processes. To provide an oxygen supply, aerobic lagoons must have aeration equipment or larger surface areas than anaerobic lagoons.

During an inspection the inspector may encounter manure that is stored in piles in fields or pastures, piles on feedlots and in livestock pens, or a watertight manure pit with a concrete- or clay-lined bottom. Short-term-storage manure is usually in solid form. Solid-manure storage areas sometimes have a grass filter strip to absorb any nutrients from leachate. In some cases, solid manure might be composted. Operations that store manure in piles exposed to rainfall in fields or pastures are considered to have a liquid manure handling system. Permitting authorities may authorize a limited period of temporary field storage of manure of no more than 15 days that would not result in the facility's meeting the definition of a liquid manure handling system (e.g., where this limited time is needed to allow for contract hauling arrangements). Once the manure is stockpiled beyond this temporary period, the uncovered stockpile constitutes a liquid manure handling system. The presence of such a liquid manure handling system affects the regulatory thresholds for chicken and duck operations.

Liquid and semisolid dairy wastes are stored using the slurry method or the lagoon method. Slurry storage is usually in a pit, slurry storage tank, or earth basin. Waste in lagoons is usually diluted with water from flush systems or milking parlor washdown. Solid waste storage facilities, both indoor and outdoor, are common at dairies. Swine operations often use manure storage basins or single- or multi-stage lagoons.

Runoff control systems, storage area integrity, and management practices are important to note. Proper siting of storage areas helps prevent contamination of drinking water supplies and other risks to human and animal health.

Land Application Activities

Land application is the most common form of manure use at CAFOs. Solid manure is usually spread using a mechanical manure spreader. Liquid manure can be applied by an irrigation system or surface applied by truck or tanker. It is sprayed on the surface (and, in some cases, later incorporated into the soil) or injected into the soil. Swine operations commonly use manure spreaders for solids or traveling irrigators, permanent irrigation systems, or portable sprinklers for liquids.

The CAFO is to conduct land application of manure and process wastewater in accordance with the applicable CAFO effluent limitations land application BMPs, the site-specific Nutrient Management Plan, the nutrient management technical standard established by the permitting authority, and the NPDES CAFO permit minimum practices.

CAFO Inspection Sampling Procedures

Rather than determining compliance with permit limitations for specific pollution parameters, CAFO sampling is focused on documenting evidence of a nonauthorized discharge to waters of the United States. Inspectors might not know whether they will be able to collect samples prior to arriving at the site but should be prepared to do so. In addition, if there is no discharge at the time of the inspection, inspectors might wish to identify and document likely pathways that a discharge would follow and the name and location of the receiving waters if such a discharge event should occur in the future.

Preparation for sampling is often based on a sampling plan. The plan is usually developed by the inspector, with input from laboratory personnel and legal counsel as appropriate. A sampling plan includes the objectives of the sample, data needs, parameters to be sampled, methods, volumes and holding times of samples, documentation and transport, and quality control procedures. The remainder of this section covers the various elements typical of sampling plans.

Parameters and Types of Samples at CAFOs

Inspectors must know before arriving at a CAFO what parameters they intend to sample to support a determination that an illegal discharge has occurred. This decision is generally made with the input of the EPA legal counsel who would be responsible for managing any enforcement action against the facility. Typical parameters sampled at CAFOs are those which readily show an effect on water quality by the discharge. These might include Biochemical Oxygen Demand (BOD), fecal or total coliform bacteria, specific conductance, and ammonia nitrogen. Many other parameters, however, may appropriately be sampled to document such discharges. Sampling of any one or a combination of these parameters can aid the inspector in documenting an illegal discharge.

Because discharges from CAFOs are likely to be nonroutine and transitory, grab sampling is usually the most appropriate sampling technique. Grab samples are individual samples collected over a period of time (not exceeding 15 minutes). They represent conditions at the time the sample is collected, and they provide information about instantaneous concentrations of pollutants at that specific time. The sample volume needed depends on the types and number of analyses to be performed.

Some parameters may be sampled only by grab sampling, but others may be sampled by either grab or composite sampling. Parameters not amenable to compositing include pH, temperature, dissolved oxygen, chlorine, purgeable organics, oil and grease, coliform bacteria, and others specified in 40 CFR Part 136. Volatile organics, sulfides, phenols, and phosphorus samples can be composited but require special handling procedures. BOD and ammonia nitrogen can be sampled by using either grab or composite techniques; if composite sampling is used, appropriate preservation must be provided during and after the sampling period.

Sample Volume

The volume of samples collected depends on the types and number of analyses needed, as reflected in the parameters to be measured. The volume of the sample obtained should be sufficient for all the required analyses plus an additional amount to provide for any split samples or repeat analyses. The laboratory receiving the sample should be consulted for any specific volume

required. Specific recommended minimum sample volumes for different pollutant parameters are provided in EPA's *Methods for Chemical Analysis of Water and Wastes* (USEPA 1979) and *Handbook for Sampling and Sample Preservation of Water and Wastewater* (USEPA 1982), and in the current EPA approved edition of *Standard Methods for the Examination of Water and Wastewater* (American Public Health Association), American Water Works Association, and Water Environment Federation.

Data Handling and Reporting

Verified analytical results are normally entered into a laboratory data management system of some type. The system should contain the sampling data, including sampling time and exact location, dates and times, names of analysts, analytical methods or techniques used, and analytical results. Data are then reported to the inspector for inclusion in the compliance report. Detailed information on laboratory procedures and quality assurance can be found in Chapter Seven of this manual.

Safety Issues and Bio-Security at CAFOs

Inspector Heath and Safety

Very few diseases in animals are of concern to humans. However, persons with low immunity can contract a specific respiratory illness from poultry called histoplasmosia. In addition, CAFOs might store pesticides in both concentrated and dilute form. Inspectors should never enter an area where pesticides are being applied. Before entering an area where pesticides have been applied, the inspector should be familiar with the pesticide signs, and should know the type of pesticide applied, the time and date of application, and whether the area is safe to enter.

The other major hazards at CAFOs include toxic gases, drowning, electrocution, and hazards associated with the equipment used for handling, transporting, and applying manure from CAFOs. During an inspection, inspectors must be aware of these potential hazards and seek to avoid the dangers they pose.

Confined spaces at CAFOs, as at other types of facilities, present a safety risk to inspectors. Gases such as hydrogen sulfide, carbon dioxide, ammonia, and methane are present in every manure pile, and if not properly ventilated, can reach concentrations dangerous to humans. Covered or enclosed tank facilities present the greatest danger, especially when manure is being agitated or pumped out of the structures. Silos and silage bunkers also represent a confined-space hazard. CAFO inspectors should ensure that facilities are properly ventilated before entering to conduct an inspection.

Drowning is a possibility where semisolid, slurry, and liquid manures are stored. Manure usually forms a surface crust. The thickness of the crust depends on the moisture content and consistency of the manure. However, under no conditions is the crust solid enough to support a human being. Inspectors should never venture out onto any crusted surfaces during an inspection.

Some owners or operators use tractors to power pumps when transferring waste out of storage lagoons. The power sources (takeoffs) present both electrical hazards and physical hazards for inspectors wearing loose-fitting clothing.

Facilities being washed present an electrocution hazard to the inspector. Wash water might conduct electricity from wiring, connections, or equipment to persons in contact with that water. Inspectors are advised to stay out of facilities during washdown.

Equipment used for handling, transporting, and applying manure can be hazardous to the operator and to others close by. The operator's manual for the equipment should document the potential hazards for that equipment. Common hazards include getting clothing or limbs caught in moving equipment parts; injury from escaping hydraulic fluid; and slippage of tractors, loaders, and spreaders. Inspectors should exercise appropriate caution (e.g., but not wearing loose-fitting clothing) around any machinery encountered during an inspection. Occupational Safety and Health Administration (OSHA) regulations make the private employer responsible for the safety of its employees, so the regulatory agency (EPA or the state) might be responsible for the inspector's safety during a CAFO inspection.

Animal Safety and Bio-Security Issues

The CAFO inspector should be familiar with all safety obligations and practices regarding basic inspections, including regional and state policies or requirements. In addition to the basic health and safety risks associated with inspecting facilities, CAFO inspectors have the added responsibility to avoid transporting livestock diseases between facilities. Many large livestock facilities give the animals medication to prevent diseases and might also disperse hormones. Livestock animals are susceptible to diseases from other facilities, and human carriers are a risk to livestock operations. Many facilities are concerned about bio-security because of the recent outbreaks of foot-and-mouth disease and mad cow disease. Without the proper precautions, inspectors might transport diseases between facilities by wearing contaminated clothing or using contaminated equipment. The current EPA bio-security policy is provided as Appendix BB.

Most swine facilities do not allow any person who has been to another swine operation within the past 72 hours to access their facility. In addition, many swine operations do not allow access to anyone who has visited another livestock operation within the past 24 hours. Inspectors must be aware of the specific facility's bio-security requirements and plan multiple inspections accordingly. The inspector might need to call in advance so that the bio-security measures are known before the inspection and the information is accessible along with other pre-inspection information.

To minimize the risk that visitors will carry diseases or infections into livestock facilities, livestock owners or operators might ask visitors to abide by their specific bio-security measures. USDA's Animal and Plant Health Inspection Service and the University of Wisconsin recommend the following bio-security precautions when visiting farms:

- Stay off farms if you have been in a foot-and-mouth disease-infected nation within 1 week. If this is not possible, wear clothing that has been laundered or dry-cleaned since leaving the infected nation.
- For visitors who have been in contact with livestock or have been on animal farms within the past 48 hours, wear clothing and outer garments that were not worn at that time or have been laundered since the previous contact.
- Wear disposable plastic boots or clean rubber boots. Rubber boots must be thoroughly cleaned and disinfected before entering and upon leaving the facility. Disposable boots must be new before entering the facility and thrown away upon leaving the facility.
- Carry disposable boots or a disinfectant in your vehicle, as well as a supply of disposable face masks. Before you enter areas where animals are kept, remove manure and soil from your shoes or boots and disinfect them, or put on disposable boots.

- Wash clothing and footwear using approved disinfectant after contact with livestock or poultry.
- Keep a supply of clean or disposable protective clothing in your vehicle. Do not wear this clothing at more than one farm without laundering. If you use disposables, throw them away after wearing them at one farm.
- Park away from areas where your vehicle might come in contact with animal waste or runoff.
- Meet the livestock owner or operator away from production areas.
- Stay away from farm animals or wear a face mask when you are near them.
- Heed warning signs asking visitors to stay out of buildings where animals are housed.
- Leave all food in your vehicle.
- Clean your nostrils and fingernails and wash your hair thoroughly.
- Dispose of clothing, shoes, equipment, cameras, and other items that are difficult or impossible to disinfect.
- Do not wear items, such as jewelry, watches, glasses, or hairpieces, that cannot be disinfected when working around animals.

This page intentionally left blank.

16. D. Multimedia Concerns

Multimedia Concerns

This section is intended as a cursory guide for CAFO inspectors who become involved in multimedia environmental compliance inspections.

Multimedia Inspections and Multimedia Screening

Multimedia compliance investigations are intended to determine a facility's status of compliance with applicable laws, regulations, and permits in more than one medium. CAFO inspectors participating in multimedia inspections may refer to the National Enforcement Investigations Center's *Multimedia Investigation Manual* (NEIC's____) for further guidance.

Multimedia Concerns at CAFOs

CAFOs regulated under the NPDES program might be also subject to the requirements of other regulatory programs. The direct relationship of these requirements to CAFOs is hard to determine without understanding the other common areas of concern. Multimedia concerns related to CAFOs fall into the following areas.

Pesticides

If a CAFO grows crops, improper application of pesticides to agricultural fields could be in violation of the Federal Insecticide, Fungicide, and Rodenticide Act (FIFRA). The facility should have in its records the registration numbers of the pesticides and any information relating to their application. Pesticide applicators must also hold appropriate licenses for application.

Sources of Drinking Water

A CAFO that has a discharge could be contaminating the drinking water of the surrounding area if the drinking water source is a well. The facility should have its water sampled and analyzed for contaminants, and the results should be reported to the state or EPA. This is discussed more thoroughly in the following section, Other Regulatory Requirements.

Other Regulatory Requirements

Coastal Zone Act Reauthorization Amendments (CZARA) of 1990

In reauthorizating the Coastal Zone Management Act in 1990, Congress identified nonpoint source pollution as a major factor in the continuing degradation of coastal waters. Congress also recognized that effective solutions to nonpoint source pollution could be implemented at the state and local levels. Therefore, in the Coastal Zone Act Reauthorization Amendments of 1990 (CZARA), Congress added Section 6217, which calls on states with federally approved coastal zone management programs to develop and implement coastal nonpoint source pollution control programs. The Section 6217 program is administered at the federal level jointly by EPA and the National Oceanic and Atmospheric Administration (NOAA).

Section 6217 (g) of CZARA called for EPA, in consultation with other agencies, to develop guidance on "management measures" for sources of nonpoint source pollution in coastal waters. Under Section 6217 of CZARA, EPA is responsible for developing technical guidance to assist states in designing coastal nonpoint source pollution control programs. On January 10, 1993, EPA issued its *Guidance Specifying Management Measures for Sources of Nonpoint Pollution in Coastal Waters,* which addresses five major source categories of nonpoint pollution:

- Urban runoff
- Agriculture runoff
- Forestry runoff
- Marinas and recreational boating
- Hydromodification

The guidelines for the agriculture nonpoint source category specifically include management measures for "confined animal facilities." The guidance also specifies management measures for erosion and sediment control, nutrient management on cropland, and grazing. These three management measures apply to facilities with livestock even if they are not confined animal facilities as defined by CZARA. However, they do not apply to CAFOs under the NPDES program. This section explains which feedlots are subject to the confined animal facility requirements of CZARA and discusses these requirements in more detail. It also briefly explains the nutrient management measures, which may be implemented by confined animal facilities.

CZARA Requirements versus CWA Requirements with Respect to Confined Animal Facilities

The CZARA guidance document has thresholds for identifying large and small confined animal facilities that are lower than those established in the NPDES CAFO regulations. Thus, in coastal states the CZARA management measures potentially apply to a greater number of small facilities than the NPDES regulations. Despite the fact that both the CZARA management measures for confined animal facilities and the NPDES regulations for CAFOs address similar operations, these programs do not overlap or conflict with each other. EPA's CZARA guidance states that any facility with an NPDES permit for CAFOs is exempt from CZARA management measures. CZARA applies to nonpoint source dischargers. Any CAFO, as defined by 40 CFR Part 122, that has an NPDES permit is a point source discharger and thus not subject to CZARA. Similarly, if an AFO subject to CZARA management measures later becomes a CAFO (by definition or designation), that facility is no longer subject to the CZARA management measures. This means that an AFO will never be subject to an NPDES permit and CZARA at the same time.

The Safe Drinking Water Act

The following four programs established by the Safe Drinking Water Act (SDWA) might apply to select feedlots. The *Underground Injection Control Program* (UIC) helps protect underground sources of drinking water by controlling the pollutants disposed of in injection wells. Injection wells that accept feedlot drainage are classified as agricultural drainage wells, one of the many types of Class V wells. Currently, all Class V wells are authorized by rule and are subject to the inventory requirements at 40 CFR Part 144, but not to the technical requirements. Class V wells, however, are subject to a performance standard that prohibits movement of contaminants into an underground source of drinking water if the contaminants could cause a violation of a drinking water standard or otherwise adversely affect human health. Because well injection of feedlot waste and runoff is very uncommon, the UIC program requirements apply to very few feedlots.

The *Sole Source Aquifer Program* includes development of a comprehensive management plan requiring identification of existing and potential point and nonpoint sources of groundwater degradation, an assessment of the relationship between activities on the land surface and

groundwater quality, and development of management practices to be implemented in the critical protection area. If identified as a source of groundwater degradation, a feedlot located above a sole source aquifer could be subject to additional management practice requirements. In a sole source aquifer area, no federal financial assistance may be used for projects that could contaminate the aquifer and create a significant public health hazard. For feedlots above a sole source aquifer, permitting authorities should work with USDA-NRCS (Natural Resources Conservation Service) and USDA-CFSA (Conservation Farm Service Agency) to determine applicable waste retention requirements for facilities that use federal cost-share funds.

The *State Wellhead Protection Areas Program* requires each state to adopt a program to protect wellhead areas from contaminants that might adversely affect human health. States determine the boundaries of their wellhead protection area. A feedlot within a designated wellhead protection area identified as a source of contaminants adversely affecting human health could be subject to additional discharge limitations or management practices.

The *Surface Water Treatment Rule* establishes criteria that public water systems must meet to avoid filtration. These criteria include identification of activities that might have an adverse effect on the quality of water sources and demonstration, through ownership or written agreements with landowners, that all sources of human activities with the potential for such adverse impacts can be controlled. Feedlots near public water systems may be asked to enter into such a written agreement.

SDWA also provides EPA with *emergency powers* to take action when a contaminant enters or is likely to enter a public water system or an underground source of drinking water and could present an imminent and substantial endangerment to the public health. An action in this case may be either an order issued to or a civil action taken against those responsible for the contamination.

16. E. References

Guidance

National Enforcement Investigations Center (NEIC). March 1992. *Mulitmedia Investigation Manual*.

U.S. Department of Agriculture - Natural Resources Conservation Service. December 2000. *Comprehensive Nutrient Management Planning Technical Guidance.*

U. S. Department of Agriculture - Natural Resources Conservation Service. *Agricultural Waste Management Field Handbook*

U. S. Department of Agriculture - Natural Resources Conservation Service. *Field Office Technical Guide* (State Specific)

U.S. Department of Agriculture - U.S. Environmental Protection Agency. March 1999. *Unified National Strategy for Animal Feeding Operations*.

U.S. Environmental Protection Agency - Office of Water. December 2003. *NPDES Permit Writers' Guidance Manual and Example NPDES Permit for Concentrated Animal Feeding Operations.* EPA 833-B-04-001.

U.S. Environmental Protection Agency - Office of Water. November 2003. *Producers' Compliance Guide for CAFOs.* EPA 821-R-03-010.

U.S. Environmental Protection Agency - Office of Enforcement and Compliance. August 2003. Clean Water Act Enforcement Strategy Update for Concentrated Animal Feeding Operations.

University of Wisconsin-Madison. 2001. *Biosecurity guidelines for UW-Madison Dairy and Livestock Facilities.* Available at: www.wisc.edu/animalsci/facilities/biosecurity.pdf. Accessed May 2001.

Statutes and Regulations

Clean Water Act. Section 301. Effluent Limitations (33 USC 1311)
Clean Water Act. Section 304. Information and Guidelines (33 USC 1314)
Clean Water Act. Section 306. National Standards of Performance (33 USC 1316)
Clean Water Act. Section 307. Toxic and Pretreatment Standards (33 USC 1317)
Clean Water Act. Section 402. National Pollutant Discharge Elimination System (33 USC 1342)

40 CFR Part 122. EPA Administered Permit Programs: The National Pollutant Discharge Elimination System
40 CRF Part 123. State Program Requirements
40 CFR Part 412. Concentrated Animal Feeding Operations (CAFO) Point Source Category

Federal Register Notice. FR 7176. February 12, 2003. National Pollutant Discharge Elimination System Permit Regulation and Effluent Limitation Guidelines and Standards for Concentrated Animal Feeding Operations (CAFOs); Final Rule.

Training

Livestock and Poultry Environmental Stewardship Curriculum, CAFO Fact Sheets, and Educational Materials. (http://lpes.org/)

State Nutrient Management Courses

U.S. Department of Agriculture - Natural Resources Conservation Service. February 2001. *Nutrient Management Version 1.1*. (Self-Study CD-ROM course on nutrient management)

Appendix BB

NPDES CAFO Permit and NMP Review Checklist

17. APPEARING AS A WITNESS

Contents Page

A. Introduction 17-1

B. Pre-Testimony 17-1
Preparation 17-1
Legal Etiquette, Appearance, and Demeanor 17-2

C. Giving Testimony 17-3
General Considerations 17-3
Pre-Trial Testimony: Depositions 17-4
Trial Testimony: Direct Examination 17-4
Trial Testimony: Cross-Examination 17-5

D. Special Considerations 17-6
Technical Testimony 17-6
Expert Witness 17-7

This page intentionally left blank.

17. A. INTRODUCTION

Introduction

Inspectors perform a vital role throughout the regulatory enforcement process. An enforcement action begins with the inspector collecting and documenting on-site evidence. This chapter deals with the inspector's responsibility to present evidence in formal legal proceedings.

Due in large part to the high quality work that inspectors produce, the EPA files strong cases. Nearly all of the cases that the EPA files result in out of court settlements that will not usually require the inspector's testimony. Of the cases that do not settle, a substantial majority of the legal action takes place in the EPA administrative law system rather than the federal courts. Major differences distinguish administrative from federal courts, such as rapid processing and the absence of a jury. Despite the differences between these two legal proceedings, the inspector's role as a witness will remain predominantly the same.

Under most circumstances an inspector will be called as a "fact witness." A fact witness describes personal knowledge obtained through one of the five senses. Throughout the enforcement process, everything an inspector hears, sees, samples, or records may become evidence about which he or she may be questioned. Many cases are tried years after the field and laboratory activities have been conducted. Thus, the inspection report and field notebook should be sufficiently detailed and legible to allow the inspector to reconstruct the inspection "on the record."

17. B. PRE-TESTIMONY MATTERS

Preparation

Preparation is the key to giving accurate and effective testimony. Successful preparation requires a substantial time commitment. Attorneys and witnesses work together in two types of preparation: factual and procedural.

The inspector will complete most of the factual preparation by writing the inspection report as described in this manual. The witness and the attorney will meet to discuss details from this report. Other items should also be discussed, including the field notebook, photographs, and the inspector's qualifications. Qualifications include the inspector's educational degree, professional accreditations, inspector training as required by Executive Order 3500.1, and on the job experience. The inspector's qualifications must never be exaggerated. Even a small exaggeration may cause the inspector's testimony to lack credibility.

The inspector should inform the EPA attorney of any problems, questions, or concerns in the case as early as possible. An example of one such concern are the confidential business information (CBI) procedures to which the inspectors must adhere. CBI procedures that bind the inspector during an inspection also have implications for the legal proceeding.

The attorney has the primary responsibility over procedural preparation, which is assembling the facts for presentation in a formal legal setting. In addition to one-on-one preparation, the inspector and attorney may consider whether the inspector should participate in a mock trial or visit a hearing to observe other witnesses testifying. During one-on-one preparation, the attorney and the inspector should discuss:

- Times and dates that require the inspector's attendance.
- Legal etiquette and procedure.
- General legal framework of the case.
- Significance of the inspector's testimony in this framework.
- Probable areas of questioning, including direct and cross-examination.
- What documents, if any, will be used by the inspector during testimony.

Before giving testimony, the witness should again review inspection documents, his or her professional qualifications, and information provided by the attorney. This review should be repeated until the witness has become thoroughly familiar with the details of the testimony and how it will be presented.

An inspector may be subpoenaed to give testimony by the opposing attorney or even by the EPA attorney. A subpoena is a Court Order to appear, and it is a mandatory legal process that does not suggest dishonesty or bias, an inspector should not be offended if he or she receives a subpoena. If an inspector is subpoenaed, the appropriate EPA attorney should be contacted immediately. Time will be short to prepare to give testimony or to fight the subpoena.

Legal Etiquette, Appearance, and Demeanor

A witness's conduct should reflect the solemn nature of the administrative or judicial proceeding. To act in accordance with required legal etiquette, a witness should:

- Dress conservatively following the advice of the EPA attorney.
- Arrive early and be available immediately when called to testify.
- Address the judge as "your honor."
- Treat an administrative proceeding as seriously as a federal court trial.

A witness should not:

- Whisper, talk, or make jokes in the hearing room. If necessary, a note may be passed.
- Bring magazines or newspapers into the hearing room.
- Discuss the case within the hearing of anyone but the EPA attorney.

Posture, speech, and appearance influence a witness's credibility. An inspector is a professional who collects, preserves, and presents evidence. In order to convey a professional demeanor, an inspector should:

- Firmly but politely speak to the opposing attorney.

- Appear natural and animated, but not impatient or overly anxious to testify.
- Minimize nervous tendencies.
- Remain calm.
- Refrain from showing hostility toward the opposing counsel, the specific defendant, or the regulated community as a whole.

17. C. GIVING TESTIMONY

General Considerations

A witness gives testimony to create a legal record of the facts. Before giving testimony, a witness will take an oath that he or she will tell the truth. Failure to tell the truth is actionable as perjury. A witness may give pre-trial testimony in a deposition or trial testimony under direct examination or cross-examination.

To give effective testimony, a witness should 1) listen, 2) pause, and then 3) answer if possible. Listening carefully to the wording and implications of an attorney's questions requires significant effort. If the witness does not understand the question, he or she should stop to think, have the question repeated, or have it explained.

A witness should pause before answering. Pausing provides time to think, makes the response more considered and deliberate, and gives the attorney time to object if necessary. When pausing, the witness should not use words such as "um." As the court reporter documents everything spoken, these words may incorrectly indicate hesitation when later read from the written record.

When answering, a witness should:

- Reply with a "Yes" or "No" when appropriate.
- Speak in complete sentences when answering more fully.
- Be as descriptive as possible in referring to exhibits or photographs. For example, "In the upper right hand corner, we see" rather than "Here, we see."
- Stop immediately if the judge or either of the lawyers begins to speak.
- Avoid memorizing answers to potential questions.
- Never manipulate an answer to benefit one side.

A witness's credibility is defined as the degree of confidence that the judge or jury gives to the witness's testimony. The opposing attorney will try to "impeach" a witness's credibility by suggesting the following: bias, inaccuracy, inability to recollect, false testimony, or even corruption. To lessen the opposing attorney's ability to discredit the witness's testimony, the witness should:

- Always tell the truth.
- Answer only the question asked, without volunteering information.

- Explain answers fully. If the opposing attorney does not allow a full explanation, the EPA attorney can choose to bring this out later in the trial during a redirect examination.
- Answer within the limits of his or her knowledge of the facts.
- Willingly say, “I don’t know,” or “I don’t remember,” if that is the case.
- Correct any mistakes in his or her previous testimony as soon as a mistake is recognized.
- Carefully identify estimates.
- Never exaggerate.
- Never guess.
- Avoid absolutes, like “I always…” or “I never…”.

Pre-Trail Testimony: Depositions

In a federal court trial, an inspector may be subpoenaed to give a deposition, which is pre-trial questioning under oath by the opposing attorney. Depositions are not often conducted in administrative hearings. Participants include the attorneys for each side, a court reporter, and the witness. Most importantly, a judge will have no role in deposition testimony unless one side abuses the process and the other side seeks relief.

The attorney may use a deposition to “discover” information or to contradict a witness’s testimony at trial. In most cases, deposition testimony cannot be used as a substitute for live testimony. To properly prepare for and give deposition testimony, an inspector should:

- Read the notice of deposition.
- Consult with the EPA attorney to determine what documentation will be necessary.
- Realize that he or she is not “off the record” until completely away from the deposition setting.
- Request a break whenever needed.

After the deposition is transcribed, the witness can read it to make any appropriate corrections. Small errors always exist, but some transcripts contain absolute disasters. Errors in technical details, such as numbers and units, can have a large impact. A witness should never waive the right to read and sign the finished deposition.

Trial Testimony: Direct Examination

The EPA attorney will question the inspector during direct examination in order to put the facts known by the inspector on the record in a well-organized and logical manner.

A good direct examination leads the inspector through his or her entire testimony using a dialogue of short questions and answers. The attorney is responsible for asking appropriate questions in the correct order and ensuring that nothing important is omitted. The witness is only responsible for answering the attorney’s questions completely and truthfully.

In order to avoid legally objectionable or tactically unwise remarks, the witness should trust the EPA attorney’s final decision concerning what questions to ask at the hearing. If the inspector has forgotten a fact, the attorney may refresh the inspector’s recollection with documents, such

as the inspection report. The EPA attorney might also ask, “Is there anything else?” to signal to the inspector that something has been left out.

Redirect examination is a round of questioning only concerning issues raised during cross-examination. Redirect will give the EPA attorney an opportunity to reduce any damage done to the credibility of the inspector’s testimony during cross-examination.

Trial Testimony: Cross-Examination

Cross-examination, questioning by the opposing attorney, will subject the witness to a more difficult interrogation than direct examination. The opposing attorney will try to cast doubt on the credibility of the witness’s testimony. Many witnesses fear counsel techniques such as leading questioning and twisting interpretation. The EPA attorney will try to protect the witness from abusive uses of these techniques.

The witness can also protect the credibility of his or her testimony by 1) answering briefly, 2) answering accurately, and 3) remaining calm. Answering briefly consists of being responsive to the question, but not volunteering extra information. Avoid rambling, even if the opposing counsel remains silent.

In addition to the recommendations in the section “Giving Testimony,” answering accurately requires listening carefully for the following types of questions:

- Questions that inaccurately paraphrase the witness’s previous testimony. The error should be corrected or the previous answer restated in full.

- Hypothetical questions or questions requiring a “Yes” or “No” answer. If these questions may compel a misleading or incomplete answer, the witness should explain the answer fully at that time or later during redirect if cut short by the opposing attorney.

- Two-part questions. The inspector should ask the attorney to restate the question or carefully answer each part separately.

Even when a witness’s truthfulness, occupational competence, or professional conclusions are challenged, he or she should remain calm. An angry, sarcastic, or argumentative answer is inconsistent with the inspector’s role as a neutral government witness. Remaining calm will add credibility to the inspector’s testimony. Becoming familiar with the process, including participation in a mock trial can help reduce the stress of cross-examination.

17. D. SPECIAL CONSIDERATIONS

Technical Testimony

An inspector frequently presents technical facts. The inspector must balance the need to be technically accurate with the need to reduce scientific issues to simple terms and concepts.

The first barrier to communicating technical information is the use of jargon. The inspector should prepare carefully in order to simplify his or her language without over-simplifying the scientific concepts. The inspector should:

- Speak as clearly as possible. The court reporter may have difficulty recognizing numbers and unfamiliar technical terms.
- Provide a glossary of technical terms, including acronyms, to the reporter.
- Review the meaning of frequently used acronyms, such as OECA meaning the Office of Enforcement and Compliance Assurance.

Even after the witness explains the definitions of the technical language, the underlying concepts may still be difficult to understand. To teach the necessary technical concepts, the inspector and attorney should consider using:

- Short answers in a logical progression of questions.
- Slow enough questioning to avoid information overload.
- Diagrams and pictures.
- Appropriate analogies.

Finally, the inspector should not try to outdo the opposing attorney on technical issues. Not only may the inspector confuse the judge or jury in the process, but also a well-prepared attorney will have thoroughly studied the subject before trial and will have a large advantage in legal debate. To successfully answer questions regarding technical information, an inspector should:

- Examine questions and answers for assumptions and exceptions.
- Look for inaccurate paraphrasing of the inspector's previous testimony.
- Always identify estimates.
- Use references in cases of complicated details. For example, the inspection report could be consulted before testifying about the characteristics of a specific sample.

Expert Witness

Expert witnesses give opinions on the record. An expert witness has technical or other specialized knowledge that helps the judge or jury better understand the case. In order to prove a witness's expertise, his or her qualifications are introduced by one side and cross-examined by the other side. Only those opinions that the witness is qualified to express by virtue of special training or expertise will be admissible.

An expert is not necessarily someone from outside the agency with particular academic or research credentials. Due to the inspector's professional expertise, he or she might be asked specific questions that require an opinion or might even be called as an expert witness. The EPA attorney will object if the opposing counsel asks inappropriate questions and will decide whether to use the inspector as an expert witness. The inspector should stay carefully within his or her limits of expertise and knowledge whenever asked a question requiring an opinion.

18. GLOSSARY

24-hour composite sample: Either a flow or time-proportioned mixture of a certain number of discreet aliquots over a period of 24 hours.

Activated Sludge: A process for removing organic matter from sewage by saturating it with air and adding biologically active sludge.

Acute: A stimulus severe enough to rapidly induce an effect; in aquatic toxicity tests, an effect observed in 96 hours or less is typically considered acute. When referring to aquatic toxicology or human health, an acute effect is not always measured in terms of lethality.

Adsorption: An advanced way of treating wastes in which activated carbon removes organic matter from wastewater.

Aeration Tank: A chamber for injecting air into water.

Aerobic: A life or process that occurs in the presence of oxygen.

Algae: Plants which grow in sunlit waters and release oxygen into the water. They are a food for fish and small aquatic animals.

Aliquot: A discrete sample used for analysis.

Alternative Systems: A system utilized in lieu of a conventional system.

Anaerobic: A life or process that occurs in the absence of oxygen.

Antidegradation: Policies which ensure protection of water quality for a particular water body where the water quality exceeds levels necessary to protect fish and wildlife propagation and recreation on and in the water. This also includes special protection of waters designated as outstanding natural resource waters. Antidegradation plans are adopted by each State to minimize adverse effects on water.

Authorized Program or Authorized State: A State, Territorial, Tribal, or interstate NPDES program which has been approved or authorized by EPA under 40 CFR Part 123.

Average monthly discharge limitation: The highest allowable average of daily discharges over a calendar month, calculated as the sum of all daily discharges measured during that month divided by the number of days on which monitoring was performed (except in the case of fecal coliform).

Average weekly discharge limitation: The highest allowable average of daily discharges over a calendar week, calculated as the sum of all daily discharges measured during a calendar week divided by the number of daily discharges measured during that week.

Bacteria: Small living organisms which often consume the organic constituents of sewage.

Beneficial Uses: The uses of water necessary for the survival or well being of man, plants, and wildlife. These uses of water serve to promote the tangible and intangible economic, social, and environmental goals. "Beneficial Uses" that may be protected against include, but are not limited to: domestic, municipal, agricultural and industrial supply; power generation; recreation; aesthetic enjoyment; navigation; and preservation and enhancement of fish, wildlife, and other aquatic resources or preserves.

Best Available Technology Economically Achievable (BAT): Technology-based standard established by the Clean Water Act (CWA) as the most appropriate means available on a national basis for controlling the direct discharge of toxic and nonconventional pollutants to navigable waters. BAT effluent limitations guidelines, in general, represent the best existing performance of treatment technologies that are economically achievable within an industrial point source category or subcategory.

Best Conventional Pollutant Control Technology (BCT): Technology-based standard for the discharge from existing industrial point sources of conventional pollutants including BOD, TSS, fecal coliform, pH, oil and grease. The BCT is established in light of a two-part "cost reasonableness" test which compares the cost for an industry to reduce its pollutant discharge with the cost to a POTW for similar levels of reduction of a pollutant loading. The second test examines the cost-effectiveness of additional industrial treatment beyond BPT. EPA must find limits which are reasonable under both tests before establishing them as BCT.

Best Management Practice (BMP): Permit condition used in place of or in conjunction with effluent limitations to prevent or control the discharge of pollutants. May include schedule of activities, prohibition of practices, maintenance procedure, or other management practice. BMPs may include, but are not limited to, treatment requirements, operating procedures, or practices to control plant site runoff, spillage, leaks, sludge or waste disposal, or drainage from raw material storage.

Best Practicable Control Technology Currently Available (BPT): The first level of technology-based standards established by the CWA to control pollutants discharged to waters of the U.S. BPT effluent limitations guidelines are generally based on the average of the best existing performance by plants within an industrial category or subcategory.

Best Professional Judgment (BPJ): The method used by permit writers to develop technology-based NPDES permit conditions on a case-by-case basis using all reasonably available and relevant data.

Bioaccumulation: The progressive accumulation of contaminants in the tissues of organisms through any route including respiration, ingestion, or direct contact with contaminated water, sediment, pore water, or dredged material to a higher concentration than in the surrounding environment. Bioaccumulation occurs with exposure and is independent of the tropic level.

Bioassay: A test used to evaluate the relative potency of a chemical or a mixture of chemicals by comparing its effect on a living organism with the effect of a standard preparation on the same type of organism.

Biochemical Oxygen Demand (BOD): A measurement of the amount of oxygen utilized by the decomposition of organic material, over a specified time period (usually 5 days) in a wastewater sample; it is used as a measurement of the readily decomposable organic content of a wastewater.

Biosolids: Nutrient-rich organic materials resulting from the treatment of domestic sewage in a treatment facility. When treated and processed, these residuals can be recycled and applied as a fertilizer to improve and maintain productive soils and stimulate plant growth. Uses include, but are not limited to, land application to agricultural land, forest land, a reclamation site or sale or give away to the public for home lawn and garden use.

Black Water: The term given to any water that carries animal, human or food wastes.

Bypass: The intentional diversion of wastestreams from any portion of a treatment (or pretreatment) facility.

Categorical Industrial User (CIU): An industrial user subject to National categorical pretreatment standards.

Categorical Pretreatment Standards: Limitations on pollutant discharges to publicly owned treatment works promulgated by EPA in accordance with Section 307 of the Clean Water Act that apply to specified process wastewaters of particular industrial categories [40 CFR §403.6 and Parts 405-471].

Chain-of-Custody: Procedures used to protect samples from tampering and to document such protection.

Chemical Oxygen Demand (COD): A measure of the oxygen-consuming capacity of inorganic and organic matter present in wastewater. COD is expressed as the amount of oxygen consumed in mg/l. Results do not necessarily correlate to the biochemical oxygen demand (BOD) because the chemical oxidant may react with substances that bacteria do not stabilize.

Chlorinator: A device for adding chlorine gas to sewage to kill infectious germs.

Chronic: A stimulus that lingers or continues for a relatively long period of time, often one-tenth of the life span or more. Chronic should be considered a relative term depending on the life span of an organism. The measurement of a chronic effect can be reduced growth, reduced reproduction, etc., in addition to lethality.

Clean Water Act (CWA): An act passed by the U.S. Congress to control water pollution. It was formerly referred to as the Federal Water Pollution Control Act of 1972 or Federal Water Pollution Control Act Amendments of 1972 (Public Law 92-500), 33 U.S.C. 1251 et. seq., as amended by: Public Law 96-483; Public Law 97-117; Public Laws 95-217, 97-117, 97-440, and 100-04.

Clean Water Act Section 402(p) [33 USC 1342(p)]: The federal statute requiring municipal and industrial dischargers to obtain NPDES permits for their discharges of storm water.

Clean Water Act Section 303(d) Listed Water Body : An impaired water body in which water quality does not meet applicable water quality standards and/or is not expected to meet water quality standards, even after the application of technology-based pollution controls required by the CWA.

Coagulation: The clumping together of solids to make them settle out of the sewage faster. Coagulation of solids is brought about with the use of certain chemicals such as lime, alum and iron salts.

Code of Federal Regulations (CFR): A codification of the final rules published daily in the Federal Register. Title 40 of the CFR contains the environmental regulations.

Combined sewage: Domestic and industrial wastewater and storm drainage carried in the same pipe.

Combined Sewer Overflow (CSO): A discharge of untreated wastewater from a combined sewer system at a point prior to the headworks of a publicly owned treatment works. CSOs generally occur during wet weather (rainfall or snowmelt) when the systems become overloaded, bypass treatment works, and discharge directly to receiving waters.

Combined Sewer System (CSS): A wastewater collection system which conveys sanitary wastewaters (domestic, commercial and industrial wastewaters) and storm water through a single pipe to a publicly owned treatment works for treatment prior to discharge to surface waters.

Comminutor: A device for the catching and shredding of heavy solid matter in the primary stage of waste treatment.

Compliance Schedule: A schedule of remedial measures included in a permit or an enforcement order, including a sequence of interim requirements (for example, actions, operations, or milestone events) that lead to compliance with the CWA and regulations.

Composite Sample: Sample composed of two or more discrete samples. The aggregate sample will reflect the average water quality covering the compositing or sample period.

Composting: The natural biological decomposition of organic material in the presence of air to form a humus-like material.

Concentrated Animal Feeding Operation (CAFO): A facility that confines a specific number of animals and meets certain other conditions in the regulations. Wastewater discharge permits for these operations are based upon the requirements of the CAFO Effluent Guidelines.

Confined Space: An enclosed space that an employee can bodily enter and perform assigned work, that has limited means of exit and entry.

Control Authority: The POTW, if it has an approved pretreatment program; in the absence of such a program, the NPDES State, if it has an approved pretreatment program or EPA, if the State does not have an approved pretreatment program.

Conventional Pollutants: Pollutants typical of municipal sewage, and for which municipal secondary treatment plants are typically designed; defined by Federal Regulation [40 CFR §401.16] as BOD, TSS, fecal coliform bacteria, oil and grease, and pH.

Conventional Systems: Systems that have been traditionally used to collect municipal wastewater in gravity sewers and convey it to a central primary or secondary treatment plant prior to discharge to surface waters.

Conveyance: A channel or passage that conducts or carries water including any pipe, ditch, channel, tunnel, conduit, well, or container.

Criteria: The numeric values and the narrative standards that represent contaminant concentrations that are not to be exceeded in the receiving environmental media (surface water, ground water, sediment) to protect beneficial uses.

Daily Discharge: The discharge of a pollutant measured during a calendar day or any 24-hour period that reasonably represents the calendar day for purposes of sampling. For pollutants with limitations expressed in units of mass, the "daily discharge" is calculated as the total mass of the pollutant discharged over the day. For pollutants with limitations expressed in other units of measurement, the "daily discharge" is calculated as the average measurement of the pollutant over the day.

Daily Maximum Limit: The maximum allowable discharge of pollutant during a calendar day. Where daily maximum limitations are expressed in units of mass, the daily discharge is the total mass discharged over the course of the day. Where daily maximum limitations are expressed in
terms of a concentration, the daily discharge is the arithmetic average measurement of the pollutant concentration derived from all measurements taken that day.

Debris: The remains of anything destroyed or broken, or accumulated loose fragments of rock.

Designated uses: Those uses specified in water quality standards for each water body or segment whether or not they are being attained.

Diffused Air: A technique by which air under pressure is forced into sewage in an aeration tank. The air is pumped down into the sewage through a perforated pipe and bubbled through the sewage.

Digestion: The decomposition of sludge that takes place in tanks and results in the partial gasification, liquefaction, and mineralization of pollutants.

Director: The Regional Administrator or State Director, as the context requires, or an authorized representative. When there is no approved State program, and there is an EPA administered program, Director means the Regional Administrator. When there is an approved State program, “Director” normally means the State Director.

Discharge: Any addition of any pollutant to waters of the U.S. from any conveyance.

Discharge Monitoring Report (DMR): The form used (including any subsequent additions, revisions, or modifications) to report self-monitoring results by NPDES permittees. DMRs must be used by approved States as well as by EPA.

Distillation: The heating the effluent and removing of the vapor or steam.

Effluent: The liquid that comes out of a treatment plant after completion of the treatment process.

Effluent Limitation: Any restriction established by the Administrator on quantities, rates, and concentrations of chemical, physical, biological and other constituents which are discharged from point sources, other than new sources, into navigable waters, the water of the contiguous zone or the ocean.

Erosion: When land is diminished or wanes away due to the effects of wind, water, or glacial ice. Often the eroded debris (silt or sediment) becomes a pollutant via storm water runoff. Erosion occurs naturally but can be intensified by land clearing activities such as farming, development, road building, and timber harvesting.

Existing uses: Those uses actually attained in the water body on or after November 28, 1975, whether or not they are included in the water quality standards.

Floc: A clump of solids formed in sewage by biological or chemical action.

Flocculation: The process by which clumps of solids in sewage are made to increase in size by chemical, physical, or biological action.

Flume: A specially shaped open channel flow section providing a change in the channel area and/or slope which results in an increased velocity and change in the level of the liquid flowing through the flume. A flume normally consists of three sections: (1) a converging section; (2) a throat section; and (3) a diverging section. The flow rate through the flume is a function of the liquid level at some point in the flume.

Flow-Weighted Composite Sample: A composite sample consisting of a mixture of aliquots collected at a constant time interval, where the volume of each aliquot is proportional to the flow rate of the discharge.

Flow-Proportional Composite Sample: A composite sample that combines discrete aliquots of a sample collected over time, based on the flow of the wastestream being sampled. There are two methods used to collect this type of sample. One collects a constant sample volume at time intervals which vary based on stream flow. The other collects varying sample volumes based on stream flow, at constant time intervals.

First Flush: Individual sample taken during the first 30 minutes of a storm event. The pollutants in this sample can often be used as a screen for non-storm water discharges since such pollutants are flushed out of the system during the initial portion of the discharge.

Fungi: Small, non-chlorophyll bearing plants which may play a useful role in trickling filter treatment operations.

General Permit: An NPDES permit issued under 40 CFR §122.28 that authorizes a category of discharges under the CWA within a geographical area. A general permit is not specifically tailored for an individual discharger.

Grab sample: A sample which is taken from a wastestream on a one-time basis without consideration of the flow rate of the wastestream and without consideration of time.

Grading: The cutting and/or filling of the land surface to a desired slope or elevation.

Gray Water: Domestic wastewater composed of washwater from sinks, kitchen sinks, bathroom sinks and tubs and laundry tubs.

Grinder Pump: A mechanical device which shreds solids and raises the fluid to a higher elevation through pressure sewers.

Groundwater: The body of water beneath the surface of the ground that is made up primarily of the water that has seeped down from the surface.

Hazardous Substance: Any substance, other than oil, which, when discharged in any quantities into waters of the U.S., presents an imminent and substantial danger to the public health or welfare, including but not limited to fish, shellfish, wildlife, shorelines and beaches (Section 311 of the CWA); identified by EPA as the pollutants listed under 40 CFR Part 116.

Head of Liquid: Depth of flow.

Illicit Discharge: Any discharge to a municipal separate storm sewer that is not composed entirely of storm water except discharges pursuant to an NPDES permit and discharges from fire fighting activities.

Incineration: The burning of sludge or other material to remove the water and reduce the remaining residues to ash.

Infiltration: water other than wastewater that enters a wastewater system and building sewers from the ground through such means as defective pipes, pipe joints, connections, and manholes. (Infiltration does not include inflow.)

Infiltration and inflow (I&I): The total quantity of water from both infiltration and inflow.

Infiltration/Percolation: A land application technique where large volumes of wastewater are applied to land, allowed to penetrate the surface and percolate through the underlying soil.

Inflow: Water other than wastewater that enters a wastewater system and building sewers from sources such as roof leaders, cellar drains, yard drains, area drains, foundation drains, drains from springs and swampy areas, manhole covers, cross connections between storm drains and sanitary sewers, catch basins, cooling towers, storm waters, surface runoff, street wash waters, and drainage. (Inflow does not include infiltration.)

Influent: Water, wastewater, or other liquid flowing into a reservoir, basin or treatment plant, or any unit thereof.

Indirect Discharge: The introduction of pollutants into a municipal sewage treatment system from any nondomestic source (i.e., any industrial or commercial facility) regulated under Section 307(b), (c), or (d) of the CWA.

Instantaneous Maximum Limit: The maximum allowable concentration of a pollutant determined from the analysis of any discrete or composite sample collected, independent of the flow rate and the duration of the sampling event.

Interceptor Sewer: A sewer without building sewer connections that is used to collect and carry flows from main and trunk sewers to a central point for treatment and discharge.

Irrigation: A land application technique wherein wastewater is applied to the land to supply the water and nutrient needs of plants.

Land Application: The discharge of wastewater onto the ground for treatment or reuse.

Landfill: An area of land or an excavation in which wastes are placed for permanent disposal, and which is not a land application unit, surface impoundment, injection well, or waste pile.

Lateral Sewers: The pipes that run under the streets of a city and receive the sewers from homes or businesses.

Local Limits: Conditional discharge limits imposed by municipalities upon industrial or commercial facilities that discharge to the municipal sewage treatment system.

Major Facility: Any NPDES facility or activity classified as such by the Regional Administrator, or in the case of approved State programs, the Regional Administrator in conjunction with the State Director. Major municipal dischargers include all facilities with design flows of greater than
one million gallons per day and facilities with EPA/State approved industrial pretreatment programs. Major industrial facilities are determined based on specific ratings criteria developed by EPA/State.

Mass-Based Standard: A discharge limit that is measured in a mass unit such as pounds per day.

Materials Management Practices: Practices used to limit the contact between significant materials and precipitation. These may include structural or nonstructural controls such as dikes, berms, sedimentation ponds, vegetation strips, spill response plans, etc.

Maximum daily discharge limitation: The highest allowable daily discharge.

Mechanical Aeration: The injection of air into water via mechanical energy that causes the waste stream to absorb oxygen from the atmosphere.

Maximum Extent Practicable (MEP): There is no regulatory definition for MEP. The CWA section 402(p)(3)(B)(iii) requires that municipal permits “shall require controls to reduce the discharge of pollutants to the maximum extent practicable, including management practices, control techniques and system, design and engineering methods, and such other provisions as the Administrator or the State determines appropriate for the control of such pollutants.

Method Detection Limit (MDL): Defined as the minimum concentration of a substance that can be measured and reported with 99 percent confidence that the analyte concentration is greater than zero and is determined from analysis of a sample in a given matrix containing the analyte.

Microbes: Minute plant or animal life. Some microbes that may cause disease exist in sewage.

Million Gallons per Day (mgd): A unit of flow commonly used for wastewater discharges. One mgd is equivalent to 1.547 cubic feet per second.

Mixed Liquor: A mixture of activated sludge and waters, containing organic matter undergoing activated sludge treatment in the aeration tank.

Mixing Zone: An area where an effluent discharge undergoes initial dilution and is extended to cover the secondary mixing in the ambient water body. A mixing zone is an allocated impact zone where water quality criteria can be exceeded as long as acutely toxic conditions are prevented.

Municipality: A city, town, borough, county, parish, district, association, or other public body created by or under state law and having jurisdiction over disposal of sewage, industrial wastes, or other wastes, or an Indian tribe or an authorized Indian tribal organization, or a designated and approved management agency under section 208 of CWA.

Municipal Separate Storm Sewer Systems (MS4): A conveyance or system of conveyances (including roads with drainage systems, municipal streets, catch basins, curbs, gutters, ditches, manmade channels, or storm drains) owned by a State, city, town or other public body, that is designed or used for collecting or conveying storm water, which is not a combined sewer, and which is not part of a publicly owned treatment works. [40 CFR §122.26(b)(8)].

National Pollutant Discharge Elimination System (NPDES): The national program for issuing, modifying, revoking and reissuing, terminating, monitoring and enforcing permits, and imposing and enforcing pretreatment requirements, under Sections 307, 318, 402, and 405 of CWA.

National Pretreatment Standard or Pretreatment Standard: Any regulation promulgated by the EPA in accordance with Sections 307(b) and (c) of the CWA that applies to a specific category of industrial users and provides limitations on the introduction of pollutants into publicly owned treatment works. This term includes the prohibited discharge standards under 40 CFR §403.5, including local limits [40 CFR §403.3(j)].

New Source Performance Standards (NSPS): Technology-based standards for facilities that qualify as new sources under 40 CFR §122.2 and 40 CFR §122.29. Standards consider that the new source facility has an opportunity to design operations to more effectively control pollutant discharges.

Nitrogenous Wastes: Wastes of animal or plant origin that contain a significant concentration of nitrogen.

Nonconventional Pollutants: All pollutants that are not included in the list of conventional or toxic pollutants in 40 CFR Part 401. Includes pollutants such as chemical oxygen demand (COD), total organic carbon (TOC), nitrogen, and phosphorus.

Nonpoint Source Pollution (NPS): Nonpoint source refers to diffuse, widespread sources of pollution. Nonpoint Sources include but are not limited to urban, agricultural, or industrial areas, roads, highways, construction sites, communities served by septic systems, recreational boating activities, timber harvesting, mining, livestock grazing, as well as physical changes to stream channels, and habitat degradation.

Non-Storm Water: Non-storm water consists of all discharges to and from a storm water conveyance system that do not originate from precipitation events (i.e., all discharges from a conveyance system other than storm water).

Non-structural BMPs: In general, activities or programs to educate the public or provide low cost non-physical solutions. Examples include: activity schedules, prohibitions of practices, street sweeping, facility maintenance, detection and elimination of illicit connections and illegal dumping, and other low-cost measures.

Nuisance: As defined in the Porter-Cologne Water Quality Control Act a nuisance is "anything which meets all of the following requirements: 1) Is injurious to health, or is indecent, or offensive to the senses, or an obstruction to the free use of property, so as to interfere with the comfortable enjoyment of life or property. 2) Affects at the same time an entire community or neighborhood, or any considerable number of persons, although the extent of the annoyance or damage inflicted upon individuals may be unequal. 3) Occurs during, or as a result of, the treatment or disposal of wastes."

Numeric Effluent Limitations: The typical method by which effluent limits are prescribed for pollutants in waste discharge requirements implementing the federal NPDES regulations. When numeric effluent limits are met at the "end-of-pipe," the effluent discharge generally will not cause water quality standards to be exceeded in the receiving waters.

Nutrients: Elements or compounds essential as raw materials for organism growth and development (e.g., carbon, oxygen, nitrogen and phosphorous).

Organic Matter: The carbonaceous waste contained in plant or animal matter and originating from domestic or industrial sources.

Outfall: Point source where an effluent is discharged into receiving waters.

Overland Flow: A land application technique that cleanses wastewater by allowing it to flow over a sloped surface. As the water flows over the surface, the contaminants are removed and the water is collected at the bottom of the slope for reuse.

Oxidation: The addition of oxygen which breaks down organic wastes or chemicals in sewage by bacterial and chemical means.

Oxidation Pond: A man-made lake or body of water in which wastes are consumed by bacteria. It is used most frequently with other waste treatment processes. An oxidation pond is basically the same as a sewage lagoon.

Pathogen: An organism that is capable of producing an infection or disease in a susceptible host.

Peak flow: The maximum flow that occurs over a specific length of time (e.g. daily, hourly, instantaneous).

Percolation: The movement of water through sub-surface soil layers, usually continuing downward to the groundwater.

Permittee: Any "person," as defined at 40 CFR §122.2, authorized by an NPDES Permit to discharge to Waters of the United States.

pH: A measure of the hydrogen ion concentration of water or wastewater; expressed as the negative log of the hydrogen ion concentration in mg/l. A pH of 7 is neutral. A pH less than 7 is acidic, and a pH greater than 7 is basic.

Phosphorous: An element that while essential to life, contributes to the eutrophication of lakes and other bodies of water.

pin floc: Small floc particle.

Point Source: Any discernible, confined, and discrete conveyance, including but not limited to any pipe, ditch, channel, tunnel, conduit, well, discrete fixture, container, rolling stock, concentrated animal feeding operation, landfill leachate collection system, vessel, or other floating craft from which pollutants are or may be discharged.

Pollutant: Dredged spoil, solid waste, incinerator residue, filter backwash, sewage, garbage, sewage sludge, munitions, chemical wastes, biological materials, radioactive materials (except those regulated under the Atomic Energy Act of 1954, as amended (42 U.S.C. 2011 et seq.)), heat, wrecked or discarded equipment, rock, sand, cellar dirt and industrial, municipal, and agricultural waste discharged into water.

Pollution Prevention: Practices and processes that reduce or eliminate the generation of pollutants, in contrast to source control, treatment, or disposal.

Polyelectrolytes: Synthetic chemicals used to speed the removal of solids from sewage. The chemicals cause the solids to flocculate or clump together more rapidly than chemicals like alum or lime.

Post-Construction BMPs: A subset of BMPs including structural and non-structural controls which detain, retain, filter, or educate to prevent the release of pollutants to surface waters during the final functional life of development.

Practical Quantification Limit (PQL): The lowest level that can be reliably achieved within specified limits of precision and accuracy during routine laboratory operating conditions.

Pressure Sewer: A system of pipes in which the water, wastewater or other liquid is transported to a higher elevation by applying a pumping force behind it.

Pretreatment: The reduction of the amount of pollutants, the elimination of pollutants, or the alteration of the nature of pollutant properties in wastewater prior to or in lieu of discharging or otherwise introducing such pollutants into a publicly owned treatment works [40 CFR §403.3(q)].cultural waste discharged into water.

Primary Treatment: The practice of removing some portion of the suspended solids and organic matter in a wastewater through sedimentation. Common usage of this term also includes preliminary treatment to remove wastewater constituents that may cause maintenance or operational problems in the system (i.e., grit removal, screening for rags and debris, oil and grease removal, etc.).

Priority Pollutants: Those pollutants considered to be of principal importance for control under the CWA based on the NRDC consent decree settlement [(NRDC et al. v. Train, 8 E.R.C. 2120 (D.D.C. 1976), modified 12 E.R.C. 1833 (D.D.C. 1979)]; a list of these pollutants is provided as Appendix A to 40 CFR Part 423.

Process Wastewater: Any water which, during manufacturing or processing, comes into direct contact with, or results from the production or use of any raw material, intermediate product, finished product, byproduct, or waste product.

Publicly Owned Treatment Works (POTW): A treatment works, as defined by Section 212 of the CWA, that is owned by the State or municipality, including any devices and systems used in the storage, treatment, recycling, and reclamation of municipal sewage or industrial wastes of a liquid nature and sewers, pipes, and other conveyances only if they convey wastewater to a POTW treatment plant [40 CFR §403.3].

Pump: A mechanical device for causing flow, raising or lifting water or other fluid, or applying pressure to fluids.

Receiving Water: The Waters of the U.S. which includes both surface and groundwaters.

Runoff Coefficient: The fraction of total rainfall that will appear at the conveyance as runoff.

Salts: The minerals that water picks up as it passes through the air over and under the ground, and as the water is used by households and industry.

Sand Filters: Filters that physically remove some suspended solids from sewage. Air and bacteria decompose additional wastes filtering through the sand. Cleaner water drains from the bed. The sludge accumulating at the surface must be removed from the bed periodically.

Sanitary Sewer: A pipe or conduit (sewer) intended to carry wastewater or water-borne wastes from homes, businesses, and industries to the POTW.

Sanitary Sewer Overflows (SSOs): Untreated or partially treated sewage overflows from a sanitary sewer collection system.

Secondary Industry Category: Any industry category which is not a primary industry category.

Secondary Treatment: Technology-based requirements for direct discharging municipal sewage treatment facilities. Standard is based on a combination of physical and biological

processes typical for the treatment of pollutants in municipal sewage. Standards are expressed as a minimum level of effluent quality in terms of: BOD 5 , suspended solids (SS), and pH (except as provided for special considerations and treatment equivalent to secondary treatment).

Sedimentation Tanks: Tanks that help to remove solids from sewage. The wastewater is pumped to the tanks where the solids settle to the bottom or float on the top as scum. The scum is skimmed off the top, and solids on the bottom are pumped to incineration, digestion, filtration or other means of final disposal.

Seepage: The slow movement of water through small cracks or pores of a material, through the soil, or into or out of a body of surface or subsurface water.

Self-Monitoring: Sampling and analyses performed by a facility to determine compliance with a permit or other regulatory requirements.

Septic Tanks: Underground tanks where domestic wastes are piped to directly from a home or homes when a sewer line is not available to carry them to a treatment plant. The bacteria in the wastes decompose the organic waste and the sludge settles on the bottom of the tank. The effluent flows out of the tank into the ground through drains. The sludge is pumped out of the tanks, usually by commercial firms, at regular intervals.

Sewage Sludge: Solid, semi-solid, or liquid residue generated during the treatment of domestic sewage in a treatment works [40 CFR §503.9(w)]. Sewage sludge includes, but is not limited to, domestic septage; scum or solids removed in primary, secondary, or advanced wastewater treatment processes; and a material derived from sewage sludge. Sewage sludge does not include ash generated during the firing of sewage sludge in a sewage sludge incinerator or grit and screenings generated during preliminary treatment of domestic sewage in a treatment works.

Sewer: A system of pipes that collects and delivers wastewater to treatment plants or receiving streams.

Significant Industrial User (SIU): An indirect discharger that is the focus of control efforts under the national pretreatment program; includes all indirect dischargers subject to national categorical pretreatment standards, and all other indirect dischargers that contribute 25,000 gpd or more of process wastewater, or which make up five percent or more of the hydraulic or organic loading to the municipal treatment plant, subject to certain exceptions [40 CFR §403.3(t)].

Sludge: The solid matter that settles to the bottom, floats, or becomes suspended in sedimentation tanks and must be disposed of by filtration and incineration or by transport to appropriate disposal sites.

Spill Prevention Control and Countermeasure Plan (SPCC): A plan prepared by a facility to minimize the likelihood of a spill and to expedite control and cleanup activities should a spill occur.

Standard Industrial Classification (SIC) Code: A code number system used to identify various types of industries. The code numbers are published by the Superintendent of

Documents, U.S. Government Printing Office, Washington, D.C. 20402. A particular industry may have more than one SIC code if it conducts several types of commercial or manufacturing activities onsite.

Sterilization: The destruction of all living organisms. In contrast, disinfection is the destruction of most of the living organisms.

Storm Sewer: A separate system of pipes that carries only runoffs from buildings and land during a storm.

Storm Water: Discharges generated by runoff from land and impervious areas such as paved streets, parking lots, and building rooftops during rainfall and snow events that often contain pollutants in quantities that could adversely affect water quality. Most storm water discharges are considered point sources and require coverage by an NPDES permit.

Structural Controls: Physical facilities or controls which may include secondary containment, treatment measures, (e.g. first flush diversion, detention/retention basins, and oil/grease separators), run-off controls (e.g., grass swales, infiltration trenches/basins, etc.), and engineering and design modification of existing structures.

Sump Pump: A mechanism used for removing water or wastewater from a sump or wet well.

Suspended Solids: The small particles of solid pollutants which are present in sewage and which resist separation from the water by conventional means.

Technology-Based Effluent Limit: A permit limit for a pollutant that is based on the capability of a treatment method to reduce the pollutant to a certain concentration.

Time Composite Sample: A composite sample prepared by collecting fixed volume aliquots at specified time intervals, which are combined into a single sample for analysis.

Total Dissolved Solids: The total dissolved (filterable) solids as determined by use of the method specified in 40 CFR part 136.

Total Maximum Daily Load (TMDL): The maximum amount of a pollutant that can be discharged into a water body from all sources (point and non-point) and still maintain water quality standards. Under Clean Water Act Section 303(d), TMDLs must be developed for all water bodies that do not meet water quality standards after application of technology-based controls.

Total Organic Carbon (TOC): The amount of organic carbon in water.

Total Suspended Solids (TSS): A measure of the filterable solids present in a sample, as determined by the method specified in 40 CFR Part 136.

Toxic Pollutants: Pollutants or combinations of pollutants, including disease-causing agents, which after discharge and upon exposure, ingestion, inhalation or assimilation into any organism, either directly from the environment or indirectly by ingestion through food chains, will, on the basis of information available to the Administrator of EPA, cause death, disease, behavioral abnormalities, cancer, genetic mutations, physiological malfunctions, (including

malfunctions in reproduction) or physical deformations, in such organisms or their offspring. Toxic pollutants include those pollutants listed by the Administrator under CWA Section 307(a)(1) or any pollutant listed under Section 405(d) which relates to sludge management.

Toxicity: Adverse responses of organisms to chemicals or physical agents ranging from mortality to physiological responses such as impaired reproduction or growth anomalies.

Toxicity Reduction Evaluation (TRE): A site-specific study conducted in a stepwise process designed to identify the causative agent(s) of effluent toxicity, isolate the sources of toxicity, evaluate the effectiveness of toxicity control options, and then confirm the reduction in effluent toxicity.

Toxicity Test: A procedure to determine the toxicity of a chemical or an effluent using living organisms. A toxicity test measures the degree of effect on exposed test organisms of a specific chemical or effluent.

Trickling Filter: A support media for bacterial growth, usually a bed of rocks or stones. The sewage is trickled over the bed so the bacteria can break down the organic wastes.

Turbidity: The capability of light to pass through water.

Upset: An exceptional incident in which there is unintentional and temporary noncompliance with the permit limit because of factors beyond the reasonable control of the permittee. An upset does not include noncompliance to the extent caused by operational error, improperly designed treatment facilities, inadequate treatment facilities, lack of preventive maintenance, or careless or improper operation.

Urban Runoff: All flows in a storm water conveyance system, including storm water (wet weather flows) and non-storm water illicit discharges (dry weather flows).

Use Attainability Analysis (UAA): A structured scientific assessment of the factors affecting the attainment of a designated use, such as physical, chemical, biological, and economic factors as described in §131.10(g).

Variance: Any mechanism or provision under Sections 301 or 316 of the CWA or under 40 CFR Part 125, or in the applicable “effluent limitations guidelines” which allows modification to or waiver of the generally applicable effluent limitations requirements or time deadlines of the CWA. This includes provisions which allow the establishment of alternative limitations based on fundamentally different factors.

Waste Treatment Plant: A series of tanks, screens, filters, and other processes by which pollutants are removed from water.

Wastesload Allocation (WLA): The proportion of a receiving water’s total maximum daily load that is allocated to one of its existing or future point sources of pollution.

Water Quality-Based Effluent Limit (WQBEL): A value determined by selecting the most stringent of the effluent limits calculated using all applicable water quality criteria (e.g., aquatic life, human health, and wildlife) for a specific point source to a specific receiving water for a given pollutant.

Water Quality Criteria: Comprised of numeric and narrative criteria. Numeric criteria are scientifically derived ambient concentrations developed by EPA or States for various pollutants of concern to protect human health and aquatic life. Narrative criteria are statements that describe the desired water quality goal.

Water Quality Standards (WQS): A law or regulation that consists of the beneficial use or uses of a water body, the numeric and narrative water quality criteria that are necessary to protect the use or uses of that particular water body, and an antidegradation statement.

Waters of the United States: All waters that are currently used, were used in the past, or may be susceptible to use in interstate or foreign commerce, including all waters subject to the ebb and flow of the tide. Waters of the United States include but are not limited to all interstate waters and intrastate lakes, rivers, streams (including intermittent streams), mudflats, sand flats, wetlands, sloughs, prairie potholes, wet meadows, play lakes, or natural ponds. [See 40 CFR §122.2 for the complete definition.]

Watershed: That geographical area which drains to a specified point on a watercourse, usually a confluence of streams or rivers (also known as drainage area, catchments, or river basin).

Weir: A device used to gauge the flow rate of liquid through a channel; is essentially a dam built across an open channel over which the liquid flows, usually through some type of notch.

Wet Weather Flow: Dry weather flow combined with storm water introduced into a combined sewer, and dry weather flow combined with inflow in a separate sewer.

Whole Effluent Toxicity (WET): The total toxic effect of an effluent measured directly with a toxicity test.

Virus: The smallest form of microorganism capable of causing disease.

This page intentionally left blank.

APPENDIX A

EPA ORDER 3500.1
TRAINING AND DEVELOPMENT FOR COMPLIANCE INSPECTORS/ FIELD INVESTIGATORS

This page intentionally left blank.

** Note: This is copy of text of EPA Order 3500.1 **

EPA ORDER
Classification No.: 3500.1
Approval Date: June 29, 1988

TRAINING AND DEVELOPMENT FOR COMPLIANCE INSPECTORS/FIELD INVESTIGATORS

1. PURPOSE. This Order establishes a consistent Agency-wide training and development program for employees leading environmental compliance inspections/field investigations.

2. APPLICABILITY. This Order applies to all Environmental Protection Agency (EPA) personnel who lead or oversee the conduct of compliance inspections/field on a full- or part-time basis under any of EPA's statutes. This order is advisory to State and local agencies.

3. POLICY. It is the policy of the Environmental Protection Agency to ensure that those who lead environmental compliance inspections/field investigations are properly trained to perform these functions in a legally and technically sound manner.

4. REFERENCES.

a. EPA 1440. Occupational Health and Safety Manual: Chapter 7, Occupational Health and Safety Training.

b. EPA Order 1440.2, Health and Safety Requirements for Employees Engaged in Field Activities.

c. EPA order 1440.3, Respiratory Protection.

d. Agency-wide Program to Train, Develop and Recognize Compliance Inspectors/Field Investigators: A Program Description, June 1988.

5. DEFINITIONS.

a. Compliance Inspections/Field Investigation Function. The function includes leading, or overseeing State/local, contractor or other personnel conducting any of the following activities for the purpose of establishing the compliance status of facilities or sites with applicable laws, standards, regulations, permits and/or of supporting appropriate enforcement action (administrative, civil judicial or criminal), including:

(1) planning and carrying out inspections of pollution abatement equipment, relevant facility operations and maintenance practices, self-monitoring practices and records, and laboratory equipment;

(2) gathering and developing evidence, including but not limited to emission monitoring measurements, other analytical field procedures such as sampling and the associated quality assurance procedures, and in-depth engineering evaluations; and

(3) maintaining field logs, recording field observations photographically, analyzing sampling and emissions data, and preparing reports of observations along with any supporting documentation.

Any EPA employee performing these activities regardless of job title or program shall be considered a compliance inspector/field investigator for the purposes of this Order. The terms compliance inspector/field investigator will be used throughout this Order. This function does not include field activities or investigations for purposes such as research and development, which are unrelated to compliance monitoring or enforcement.

Not all individuals performing work as On-Scene Coordinators (OSCs) and Remedial Project Managers (RPMs) under the CERCLA program are covered by the definition of the compliance inspection/field investigation function. Additional program guidance will be developed to assist Regions in distinguishing these functions from other programmatic responsibilities.

b. New Compliance Inspector/Field Investigators. Including:

(1) Individuals newly employed by EPA subsequent to the issuance date of this Order regardless of previous training in and experience leading environmental compliance inspections/field investigations, or

(2) Individuals rehired by EPA or transferred within EPA, subsequent to the issuance date of this Order, with no previous training in and experience leading environmental compliance inspections/field investigations.

c. Experienced Compliance Inspectors/Field Investigators. Including: Individuals who were employed by EPA on the issuance date of this policy, and/or who have previous training in and experience leading environmental compliance inspections/field investigations in any one of EPA's compliance and enforcement programs.

d. First-line Supervisors of Inspectors. A first-line supervisor is the immediate supervisor of the day-to-day work of an individual who leads or oversees compliance inspections/field investigations. The first-line supervisor, who is responsible for the official performance appraisal, may be "new" or “experienced" as defined above in Items 5(b) or 5(c).

e. Contract Inspectors and Others. This category includes contract personnel and employees of a grantee organization under the Senior Environmental Employment Program, performing compliance inspections/field investigations under EPA's statutes.

f. Leading an Inspection. Leading an inspection means independently

conducting a compliance inspection/field investigation or directing an inspection/investigation with others as support staff.

g. Curriculum. Curriculum refers to defined content presented in a sequence of supervised self-study, formal on-the-job and/or classroom training:

(1) Supervised Self-Study. Self-study means any knowledge gained through independent, personal study, and overseen by a first-line supervisor or an experienced inspector/investigator.

(2) On-the-Job Training. On-the-job training (OJT) means structured training that relates principles or theories to work-related skills which are demonstrated and applied in the field environment during an actual compliance inspection/field investigation.

(3) Classroom/classes.. This refers broadly to any form of instruction, flexible in format and size, to include seminars, workshops, lecture-type or video-assisted classes, or question-and-answer sessions following prior independent self-study, that fosters group interaction with an instructor or an experienced inspector.

h. Completing Required Training. Completion of required training means completing self-study, OJT and participation in classes covering the content described in applicable training curricula.

6. TRAINING PROGRAM. EPA's training program consists of three parts - Occupational Health and Safety Curriculum, Basic Curriculum, and Program-Specific Curricula - as follows.

a. Occupational Health and Safety Curricula. EPA Order 1440.2 establishes basic, intermediate, advanced and refresher requirements for occupational health and safety training for all EPA employees before engaging in any field activities. In addition, EPA compliance inspectors/field investigators must meet requirements, where these apply, of EPA Order 1440.3 for Respiratory Protection. A summary of the curriculum is found in Appendix B of Reference 4(d) above. Contractor personnel must meet training requirements of applicable regulations of the Occupational Safety and Health Administration (OSHA).

b. Basic Inspector Curriculum. This Curriculum establishes required training to provide a comprehensive overview of knowledge and skills needed for compliance inspections/field investigations under any EPA statute. It consists of a course, that integrates legal, technical and administrative subjects, with communication skills. It also includes the Occupational Health and Safety Curriculum cited in 6(a) above. The Basic Curriculum is summarized in Appendix C of Reference 4(d) above. Related supplemental Training is recommended to further develop some of these skills, as summarized in Appendix F of Reference 4(d) above.

c. Program-Specific Curricula. The Program-Specific Minimum Curriculum for each major environmental program establishes required training in legal, programmatic

and technical subjects. Any EPA compliance inspector conducting inspections in more than one program is required to have completed the relevant Program-Specific Minimum Curricula in each such program. Program-Specific Specialized Training is recommended to further develop inspection skills. Summaries of these curricula are available in Appendix D, of Reference 4(d) above. A summary of multi-media (multi-program) training recommendations is available in Appendix E of Reference 4(d) above.

d. Refresher Training.

(1) Occupational Health and Safety: EPA Orders 1440.2 and 1440.3 require refresher training annually.

(2) Basic and Program-Specific Minimum Curricula: Refresher training in both the Basic Curriculum and Program-Specific Minimum Curricula is strongly recommended, but at the discretion of the first-line supervisor. At a minimum, refresher training should occur every three years, or more frequently, depending on the needs of the individual, and changing emphases or needs in the compliance and enforcement program.

7. REQUIREMENTS AND EXCEPTIONS.

a. Before Any Field Activities. All compliance inspectors and first-line supervisors of inspectors are required to complete applicable occupational health and safety training before any field activities as defined in EPA Orders 1400.2 and 1400.3.

b. Before Leading Inspections/Investigations. All compliance inspectors/field investigators must complete the Basic Curriculum and the Program-Specific Minimum Curriculum in the assigned program area(s) before leading an inspection. Experienced inspectors may be excepted from the Basic Curriculum, but new inspectors may not. There may be limited exceptions to program-specific requirements for new and experienced inspectors.

c. Within One Year When Supervising. The requirements to complete the Basic and Program-Specific Minimum Curriculum apply to first-line supervisors of compliance inspectors. First-line supervisors shall meet these requirements within one year of appointment to the supervisory position, if they have not already done so. If the first-line supervisor directs inspectors/investigators in two or more programs, the supervisor may need additional time to complete all of the applicable Program-Specific Minimum Curricula, and should do so as soon as practicable. Experienced first-line supervisors may be excepted from the Basic Curriculum, but new ones may not. There may be limited exceptions to program-specific requirements for new and experienced first-line supervisors.

d. Procedures for Exceptions.

(1) Health and Safety Training. Any exceptions to the occupational health and safety training requirements must be in accordance with Paragraph 9(d), EPA Order 1440.2, or the provisions of 1440.3.

(2) Basic and Program-Specific Minimum Curricula. In the Regions, exceptions must be approved by the Regional Administrator. Delegation below this level may be made to the Deputy Regional Administrator or a cross-regional panel of managers established for this purpose, but excluding the immediate first- or second-line supervisor of the individual for whom the exception is being requested. For Program Offices with inspectors based in Headquarters, the Assistant Administrator shall approve exceptions for those inspectors. Delegation below this level may be made to the Deputy Assistant Administrator, or Office Director, or in the case of OECM, to the Director of the National Enforcement Investigations Center (NEIC). The first-line supervisor shall prepare a written request based upon guides for evaluating the previous knowledge, experience and/or training of the inspector, and shall submit this to the approving official, according to procedures adopted in the Region or Headquarters, whichever apply. A copy of the approved written request shall be placed in the employee's official personnel file along with other training records.

8. EFFECTIVE DATE.

a. Occupational Health and Safety Training. The requirements of EPA Orders 1440.2 and 1440.3 are in effect and will remain in effect.

b. Basic and Program-Specific Minimum Curricula. This Order is effective on the date of issuance; however, requirements are phased in as follows:

(1) New Inspectors. Beginning October 1, 1989, new inspectors shall not lead inspections unless they have completed the Basic Curricula, and have completed, or have been formally excepted, from the Program-Specific Minimum Curricula.

(2) Experienced Inspectors. Beginning October 1, 1991, experienced inspectors shall not lead inspections unless they have completed or have been formally excepted from the Basic and Program-Specific Minimum Curricula.

(3) First-line Supervisors. Beginning October 1, 1989, all first-line supervisors shall meet the requirements of this Order or have been formally excepted within one year of appointment to the supervisory position, or as soon as practicable, for those with two or more programs.

(4) Contract Inspectors and Others. Training requirements for EPA contract inspectors shall be appropriately-phased into future contracts or solicitations involving compliance inspection work. These requirements shall be incorporated into future assistance agreements awarded under the Senior Environmental Employment Program involving compliance inspections.

9. RESPONSIBILITIES. This section lists the primary responsibilities for

implementing this Order. Appendix G of Reference 4(d) above contains a more detailed list of responsibilities.

a. Assistant Administrator for Enforcement and Compliance Monitoring (OECM,). The Assistant Administrator for Enforcement and Compliance Monitoring is responsible for:

(1) Updating this Order, and overseeing and evaluating implementation of the overall program requirements every 3 years;

(2) Developing, updating and disseminating student manuals and instructor's guides for the Basic Curriculum to the Regions, coordinating the selection of and maintaining a list of instructors from the Regions and Headquarters; and

(3) Organizing a board of Senior Agency Managers from Headquarters and Regions, and inspectors/investigators to advise him/her in carrying out the responsibilities listed above.

b. Assistant Administrator for Administration and Resources Management. The Assistant Administrator for Administration and Resources Management is responsible for:

(1) Updating and providing sufficient materials for occupational health and safety training, or approving non-EPA courses to meet the requirements of EPA Orders 1440.2 and 1440.3, and reviewing program-specific health and safety training.

(2) Training and evaluating EPA personnel designated as instructors for delivering the Inspector Health and Safety Curriculum; and

(3) Coordinating and disseminating a timely schedule of classes of the Health and Safety, Basic, and Program-Specific Curricula, in consultation with OECM, Program Offices and the Regions.

c. Assistant Administrators. The Assistant Administrators are responsible for:

(1) Implementing the requirements of this Order and Agency program [Reference 4(d)] within their areas of jurisdiction, including periodically evaluating implementation;

(2) Developing, updating, and disseminating materials and schedules for classes under the Program-Specific Curricula, in consultation with Regions and States, and providing a plan by October 30, 1988, for implementing the Basic Curriculum for inspectors based in Headquarters;

(3) Establishing guides for first-line supervisors of inspectors to evaluate the training and development needs of compliance inspectors/field investigators and approving requests for exceptions;

(4) Determining who among those inspectors/investigators based in Headquarters are subject to this Order, and reviewing and approving exceptions to the training requirements requested for these personnel.

(5) Ensuring in future contracts and assistance agreements awarded under the Senior Environmental Employment Program involving compliance inspections that training is required by means of statements of work or other appropriate vehicles; and

(6) Establishing standing work groups including Regions, and States where appropriate, to help carry out these responsibilities and to improve the quality of the compliance monitoring function.

d. Regional Administrators. The Regional Administrators are responsible for:

(1) Implementing the requirements of this Order and Agency program (Reference 4(d)) within their areas of jurisdictions, including periodically evaluating implementation;

(2) Determining who in the Region is subject to this Order, and reviewing and approving any exceptions to the training requirements;

(3) Ensuring in future contracts involving compliance inspections that training is required by means of statements of work or other appropriate vehicles;

(4) Supporting in-house instruction for the Basic Curriculum, by working with OECM to identify Regional personnel to serve as classroom instructors and providing a Regional implementation plan by October-30, 1988; and

(5) Ensuring each program identifies States' inspector training needs annually through the State/EPA Enforcement Agreements process; assisting States in identifying ways to meet their training needs; and coordinating training opportunities.

e. Line Supervisors. Line supervisors in Program or Environmental Service Divisions, are responsible for:

(1) Ensuring quality compliance inspections/field investigations using performance standards, periodic appraisals, appropriate assignments to ensure development, and recognition of personnel engaged in the compliance monitoring function; and

(2) Identifying employees who require training, ensuring that employees comply with the requirements of this Order, preparing requests for exceptions, and maintaining records of actions.

f. Compliance Inspectors/Field Investigators. Compliance inspectors/field investigators are responsible for.

(1) Advising their supervisor about the history and extent of relevant training and experience, and assisting in the preparation of an Individual Development Plan to meet the requirements of this Order; and

(2) Applying and maintaining the knowledge, skills, and techniques acquired through training to ensure that inspections/investigations are accomplished in a technically and legally sound manner.

/s/
James Barnes
Deputy Administrator
Dated: June 29, 1988

APPENDIX B

EPA ORDER 1440.2
HEALTH AND SAFETY REQUIREMENTS FOR EMPLOYEES ENGAGED IN FIELD ACTIVITIES

This page intentionally left blank.

PROTECTIVE SERVICES - SAFETY

HEALTH AND SAFETY REQUIREMENTS FOR EMPLOYEES ENGAGED IN FIELD ACTIVITIES

1. PURPOSE. This Order establishes policy, responsibilities, and mandatory requirements for occupational health and safety training and certification, and occupational medical monitoring of Agency employees engaged in field activities.

2. DEFINITIONS.

a. The term "field activities" as used in this Order means EPA program activities that are conducted by EPA employees outside of EPA administered facilities. These activities include environmental and pesticides sampling, inspection of water and wastewater treatment plants, and hazardous material spills and waste site investigations, inspections, and sampling.

b. The term "health and safety training" means scheduled, formal or informal training courses, approved and sponsored by EPA and conducted by EPA or its contracted agents which is designed to develop, improve and upgrade the health and safety knowledge of EPA employees involved in field activities.

c. The term "occupational medical monitoring" means surveillance over the health status of employees by means of periodic medical examinations or screening in accordance with the Agency's Occupational Medical Monitoring guidelines.

d. The term "certification" as used in this Order means that the employee has successfully completed the minimum classroom and field training requirements for the specified level of training and the Agency has issued a certificate attesting that the employee met these requirements.

3. REFERENCES.

a. 29 CFR 1910, Parts 16, 94, 96, 106, 109, 111, 134, 151, 1000, Occupational Health and Safety Standards.

b. Executive Order 12196, Section 1-201, Sec. (k), Occupational Health and Safety Programs for Federal Employees.

c. 29 CFR 1960.59(a), Occupational Safety and Health for the Federal Employee.

d. EPA Occupational Health and Safety Manual, Chapter 7(1).

e. EPA Training and Development Manual, Chapter 3, Par 7(b).

f. Occupational Health and Safety Act of 1971, P.L. 91-596, Sec.6.

g. EPA Order on Respiratory Protection (Proposed).

h. 49 CFR, Parts 100-177, Transportation of Hazardous Materials.

i. EPA Order 1000.18, Transportation of Hazardous Materials.

j. EPA Order 3100.1, Change 1, Uniforms, Protective Clothing, and Protective Equipment.

4. BACKGROUND. Field activities are a critical part of most EPA programs. These activities range from routine environmental reconnaissance sampling, inspections, and monitoring, to entering and working in environments with known and unknown hazards. Since protection can not be engineered into the field working situation, the protection of personnel engaged in field activities involves training employees in safe operational procedures and the proper use of appropriate personal protective clothing and equipment.

5. APPLICABILITY. This Order applies to all EPA organizational units which have employees engaged in field activities.

6. POLICY. It is the policy of the Environmental Protection Agency to carry out its field activities in a manner that assures the protection of its employees.

7. RESPONSIBILITIES.

a. Assistant Administrators, Regional Administrators, Deputy Assistant Administrators, Laboratory Directors, and Division Directors. These officials are responsible within their jurisdictions for implementing the provisions of this Order and for budgeting the necessary funds for employee training and certification, personal protective clothing and equipment, and occupational medical monitoring programs.

b. Supervisors. Supervisors are responsible for complying with the requirements of this Order for employee training and certification, and occupational medical monitoring programs. They will identify those employees who require training and certification, and occupational medical monitoring, and assure they receive it to comply with the provisions of this Order and will insure these requirements are properly contained in position descriptions and job postings.

c. Employees. Employees are responsible for making known upon request from their supervisors the extent of their individual occupational health and safety training and the history of their occupational medical monitoring participation. Employees should notify their supervisor of any hazardous work situation and make suggestions for corrective measures. Employees are responsible for applying the knowledge, skills, and techniques acquired through training in a manner that will help assure their health and safety and that of fellow workers.

d. Occupational Health and Safety Designees. The Occupational Health and Safety Designees are responsible for identifying program areas that require training and certification, and occupational medical monitoring; recommending or providing training and certification resources to meet the requirements of this Order; and maintaining records of persons receiving training and certification.

e. Office of Occupational Health and Safety. The Director, Office of Occupational Health and Safety is responsible for establishing policy and requirements for adequate training and certification programs for field activities, developing and maintaining an occupational medical monitoring program, approving health and safety training and certification programs for employees involved in field activities, and for evaluating the results of these training and certification programs.

8. OBJECTIVES.

a. Training and Certification. The objective of the health and safety training and certification programs for employees involved in field activities are:

(1) To assure that EPA employees are aware of the potential hazards they may encounter during the performance of field activities;

(2) To provide the knowledge and skills necessary to perform the work with the least possible risk to personal health and safety;

(3) To assure that Agency program goals are accomplished in as safe and healthful manner as feasible; and

(4) To assure that EPA employees can safely disengage themselves from an actual hazardous situation which may occur during a field activity.

b. Occupational Medical Monitoring. The objectives of the occupational Medical Monitoring program are:

(1) To detect any adverse effects of occupational exposure on the employees health and to initiate prompt corrective actions when indicated; and

(2) To assure that employees assigned arduous or physically taxing jobs or jobs requiring unique skills are able to perform those jobs without impairing their health and safety or the health and safety of others.

9. TRAINING AND CERTIFICATION REQUIREMENTS. Employees shall not be permitted to engage in routine field activities until they have been trained and certified to a level commensurate with the degree of anticipated hazards.

a. Basic Level. All employees shall be provided a minimum of 24 hours of health and safety training prior to their becoming involved in normal, routine field activities. The training shall include but not be limited to classroom instruction in all the following subject areas:

(1) Employee Rights and Responsibilities;
(2) Nature of Anticipated Hazards;
(3) Emergency Help and Self-Rescue;
(4) Vehicles - Mandatory Rules and Regulations;
(5) Safe Use of Field Equipment;
(6) Use, Handling, Storage, and Transportation of Hazardous Materials;
(7) Personal Protective Equipment and Clothing, Use and Care; and
(8) Safe Sampling Techniques.

In addition to classroom instruction, the employee shall accompany an employee experienced in field activities and perform actual field tasks for a minimum of three days within a period of three months after classroom instruction. Employees satisfactorily completing these requirements will receive certification at the Basic Level of training from the Occupational Health and Safety Designee at the Reporting Unit.

b. Intermediate Level. All inexperienced employees who are to work with experienced employees in uncontrolled hazardous waste and hazardous spills sites investigators or employees engaged in other activities which at a later data are determined by the Director, Office of Occupational Health and Safety, to present unique hazards requiring additional training, shall be provided a minimum of 8 hours of additional health and safety training. This training shall include (in addition to the Basic Level requirements) but not be limited to the following subject matter:

(1) Site surveillance, observation, and safety plan development;
(2) Use and decontamination of totally enclosed protective clothing and equipment;
(3) Use of field test equipment for radioactivity, explosivity, and other measurements; and
(4) Topics specific to other identified activities.

In addition to classroom instruction, the employee shall accompany another employee experienced in hazardous waste and spill site investigations and/or cleanup operations and perform actual field tasks for a minimum of three days within a three month period, following classroom instruction. The employee should also be able to provide on-the-job training and instructions to inexperienced employees during normal routine field activities (as required above). Employees satisfactorily completing these requirements will be certified at the Intermediate Level by the Occupational Health and Safety Designee at the Reporting Unit.

c. Advanced Level. All employees who manage uncontrolled hazardous waste site and spill site monitoring, sampling, investigations, and cleanup operations shall be provided a minimum of 8 hours additional health and safety training. The classroom training shall include but not be limited to (in addition to the Basic and Intermediate Level requirements), instruction in the following subject areas:

(1) Management of restricted and safe zones;
(2) Rules of Handling the Press and VIP's; and
(3) Safe Use of Specialized Sampling Equipment.

In addition to classroom instruction, the employee shall accompany another employee with experience in managing hazardous waste and spill site investigations or cleanup operations and perform actual field tasks for a minimum of three days within a period of three months after classroom instruction. After satisfactorily completing these requirements, employees will receive Advanced Level certification from the Occupational Health and Safety Designee at the Reporting Unit.

d. General.

(1) An employee may receive certification at the next higher level by completing only the additional training requirements if certified at the next lower level within the previous one-year period.

(2) The Director, Office of Occupational Health and Safety, may certify employees based on an evaluation of previous training, education, and experience. Recommendations for this type certification should be made to the Director by the Occupational Health and Safety Designee at the Reporting Unit.

10. FREQUENCY OF TRAINING. Employees at the Basic, Intermediate, and Advanced Levels shall complete a minimum of 8 hours of refresher classroom instruction annually consisting of a review of all subject areas to maintain their certification. In addition to the classroom instruction, employees shall have demonstrated by having performed actual field tasks that they have sufficient practical experience to perform their assigned duties in a safe and healthful manner.

11. RECORD OF TRAINING.

a. A record of the level of training and certification shall be maintained in the employee's official personnel file.

b. The Occupational Health and Safety Designee shall maintain a roster of employee training and certification so that a schedule of annual training can be established.

c. The Occupational Health and Safety Designee shall issue a certificate to the employee showing the level of training and certification.

12. OCCUPATIONAL MEDICAL MONITORING REQUIREMENTS. All employees routinely engaged in field activities which present the probability of exposure to hazardous or toxic substances, which are arduous or physically taxing, or which require the use of respiratory protective equipment shall be included in the Agency's Occupational Medical Monitoring Program. Employees should not be permitted to engage in field activities unless they have undergone a baseline medical examination (as defined in the Agency's Occupational Medical Monitoring Guidelines), which will show physical fitness and provide a base to measure any adverse effects their activities may have on these individuals.

13. SAVING PROVISIONS. Changes in the Act, Executive Order, or EPA and OSHA standards and guidelines which occur after the effective date of this Order will automatically come under the purview of this Order on the effective date of the change.

Full implementation of this Order shall be within one year of its effective date

Edward J. Hanley
Director, Office of Management
Information and Support Services

APPENDIX C

REVISED FACT SHEET: SAFETY AND HEALTH REQUIREMENTS FOR EPA INSPECTORS

This page intentionally left blank.

May 14, 2001

MEMORANDUM

SUBJECT: ***Revised Fact Sheet***: Safety and Health Requirements for EPA Compliance Inspectors

FROM: Michael Alushin, Director /S/
Compliance Assessment and Media Programs Division

TO: Regional Enforcement Division Directors, Regions 1, 2,4, 6, 8
Regional Media Division Directors, Regions 3, 5, 7, 9, 10
Regional Science and Technology Division Directors, Regions 1-10

This memorandum transmits a **revised fact sheet** to distribute to the regional inspectors in your respective organizations. We prepared the fact sheet in response to requests for a quick reference summary made at the National Inspector Workshop we held last November. If you wish more information, you should obtain copies of EPA Orders 1440.1, 1440.2, 3500.1, and the OSHA requirements in 29 CFR 1910.120. The fact sheet discusses how to obtain copies of these documents.

This revised fact sheet was developed to address concerns expressed by Regional safety and health officers dealing with refresher health and safety training. The following highlights considerations leading to the revisions we made to the fact sheet:

- Language in the various safety and health orders can be interpreted in several ways
- After reviewing Regional concerns, we have decided to revise the fact sheet to interpret the Orders as requiring **only a minimum of eight hours annual refresher training**
- EPA inspectors that have been trained to the intermediate or advanced level need different refresher training than inspectors trained to the basic level

We encourage the Regions, based on the number of intermediate and advanced level inspectors in their Region, to provide training on the specific risks posed to these inspectors. The Regions should be providing safety and health refresher courses specific to the level the inspector has achieved (basic, intermediate or advanced). The basic level refresher course can generally be met by reviewing the "Safety, Health and Environmental Management Training for Field Activities", in conjunction with the field refresher requirement. We encourage you to review the various EPA Orders dealing with safety and health of EPA employees that are posted on the EPA Inspector Website. The website address is: **http://INTRANET.EPA.GOV/OECA/OC/METD/INSPECTOR**

Thank you for your attention. We sincerely hope the revised fact sheet will improve the understanding of the health and safety requirements in order to provide EPA inspectors with a safe and healthy working environment. If you have any questions about this fact sheet, you can contact either OECA (Ken Gigliello at 202-564-2300) or OARM (Jerry Oakley at 202-564-2082).

cc: OC Division Directors
ORE Division Directors
OCEFT Division Directors
OARM/Safety, Health and Management Division
Enforcement Coordinators, Regions I-X
Safety and Health Officers, Regions I-X

REVISED FACT SHEET
Safety and Health Requirements for EPA Compliance Inspectors

(May 11, 2001)

Introduction This fact sheet is intended to be a quick reference guide for EPA compliance inspectors. It provides a **summary** of the requirements of EPA Orders 1440.1 and 1440.2, and OSHA 29 CFR 1910.120 (e)(3)-(9). EPA compliance inspectors should obtain copies of the specific Orders and the OSHA regulations for more specific information. EPA Orders dealing with safety and health are posted on the EPA Inspector Website. The website address is: **http://INTRANET.EPA.GOV/OECA/OC/METD/INSPECTOR**

Background EPA Order 1440.1, dated May, 1998, Safety, Health and Environmental Management Program, establishes new policies, delegates authorities, defines management functions and responsibilities, and creates Agency-wide organizational structure for the administration of Safety, Health and Environmental Management (SHEEP). Copies of the Order can be obtained from the Office of Administration and Resource Management (ARM), Safety, Health and Environmental Management Division (Phone: 202-564-1640), or the Regional Safety and Health Officer.

EPA Order 1440.1 is an omnibus Order designed to replace all specific EPA Orders dealing with safety, health and environmental management. This action was taken to minimize the number of orders and to enable more flexibility in modifying regulations through the use of guidelines.

When EPA Order 1440.1 was finalized, the ARM was beginning a review of the entire issue of training requirements for both field and laboratory employees. Until this review was completed, ARM did not want to make changes to the Orders related to training.

As a result, EPA Order 1440.2, Health and Safety Requirements for Employees Engaged in Field Activities, was not incorporated into EPA Order 1440.1. However, ARM expects to do so in the Spring of 2001. ARM is examining several alternatives and when the review is completed, they will produce a set of guidelines to be included under EPA Order 1440.1. This will eliminate EPA Order 1440.2. **Until that time, EPA Order 1440.2 remains in effect.**

The guidelines that have been, and will be developed to replace existing Orders will be issued to EPA personnel to explain statutory and regulatory

mandates, to interpret their application to EPA activities, and to identify the knowledge, skills, and abilities of personnel who must implement them. *The guidelines are recommendations, and do not have to be followed exactly.*

Guidelines

Approximately 55 safety, health and environmental management guidelines have been developed to date to help EPA manage its safety, health and environmental management responsibilities. The guidelines developed to date covering a wide range of topics including management systems, environmental statutes, transferring real property, office building compliance, fire protection and life safety, chemical handling and safety, laboratory procedures, forklift operations, electrical safety, radiation, lockout/tagout, occupational noise, workplace hazards, hazard communication, handling of PCBs and asbestos, and personal protective equipment.

EPA Order 1440.2

EPA Order 1440.2, dated July 12, 1981, and titled Health and Safety Requirements for Employees Engaged in Field Activities, establishes policy, responsibilities, and **mandatory requirements** for occupational health and safety training and certification, and occupational medical monitoring of Agency employees engaged in field activities. The Order is seven (7) pages in length. The Order establishes three (3) levels of initial health and safety training: basic (24 hours), intermediate (8 hours), and advanced (8 hours). The specific requirements for each level are listed below. This Order is incorporated by reference into EPA Order 3500.1, Training and Development for Lead Compliance Inspectors/Field Investigators, dated June 29, 1988. This Order is currently being revised but the EPA Order 1440.1 reference will be included in the revised Order.

The Order only reflects EPA's internal training requirements and does NOT eliminate the requirements for field personnel working with hazardous materials covered by 29CFR 1910.120 (e)(3)-(9). These OSHA regulations require training for employees working at clean-up operations conducted under the Superfund or RCRA correction action programs, voluntary cleanup operations, operations involving hazardous waste at RCRA Treatment, Storage and Disposal Facilities (TSDF's), and emergency response operations for releases of hazardous substances. The requirements can be retrieved from the OSHA web site at http://www.osha-slc.gov/OshStd_data/1910_0120.html. While many of these requirements are similar and some training will count toward meeting both sets of requirements, it should be remembered that they are separate requirements.

Basic

The basic level training shall include, but not be limited to, classroom instruction in all of the following areas:

- ➜ Employee rights and responsibilities
- ➜ Nature of anticipated hazards
- ➜ Emergency self-help and rescue
- ➜ Vehicles – mandatory rules and regulations
- ➜ Safe use of field equipment
- ➜ Use, handling, storage, and transportation of hazardous material
- ➜ Personal protective equipment and clothing, use, and care, and
- ➜ Safe sampling techniques

In addition to classroom instruction, the employee shall accompany an employee experienced in field activities and perform actual field activities for a minimum of three (3) days within a period of three months after classroom instruction.

Intermediate

The intermediate level training is required for employees who engage in activities at uncontrolled hazardous waste and hazardous spill site investigations or employees engaged in other activities which are determined at a later date to present unique hazards requiring additional training. The intermediate training shall include, but not be limited to, to the following subject areas:

- ➜ Site surveillance, observation, and safety plan development
- ➜ Use and decontamination of totally enclosed protective clothing/equipment
- ➜ Use of field test equipment for radioactivity, exclusivity, and other measurements
- ➜ Topics specific to other identified activities

In addition to classroom instruction, the employee shall accompany an employee experienced in hazardous waste and spill site investigations and/or cleanup operations and perform actual field activities for a minimum of three (3) days within a period of three months after classroom instruction.

Advanced

The advanced level training is required for employees who manage uncontrolled hazardous waste and spill site monitoring, sampling, investigations and cleanup operations. The advanced training shall include, but not be limited to, to the following subject areas:

- ➜ Management of restricted and safe zones
- ➜ Rules of handling the press and VIP's
- ➜ Safe use of specialized sampling equipment

In addition to classroom instruction, the employee shall accompany an employee experienced in managing hazardous waste and spill site investigations or cleanup operations and perform actual field activities for a minimum of three (3) days within a period of three months after classroom instruction.

Refresher

Refresher training requirements are a minimum of eight (8) hours for all EPA inspectors. The type of training required depends upon which level of training the EPA inspector has completed. Basic level refresher training is probably appropriate for most EPA inspectors.

For EPA inspectors that have taken intermediate and advanced level safety and health training, refresher training should be tailored to the specific needs of the particular EPA inspectors, where possible. The Regions and/or ARM are responsible for developing and delivering this level-specific refresher training.

In addition to the classroom instruction, employees shall have demonstrated sufficient practical experience to perform their duties in a safe and healthful manner by having performed actual field tasks related to their level of training.

Safety and Health Training Availability

Training	How to Get? Where Delivered?	Comments
EPA Safety and Health Environmental Management Training for Field Activities -- computer based CD-rom course	Jerry Oakey (ARM) 202-564-2082	Includes modules on employee rights and responsibilities, nature of anticipated hazards (in-depth), personal protective equipment, some safe use of field and sampling equipment, and transportation of hazardous materials. CD does **not** cover emergency self-help and rescue, mandatory rules and regulations for vehicles, and specific field and sampling equipment procedures. This CD was not available when EPA Order 1440.2 was written in 1981. ARM has approved CD-rom training as an acceptable alternative to traditional classroom training with a couple of caveats: 1) Some activities (e.g., respirator fit testing) require hands-on training, and are not covered by CD-rom training, 2) The one requirement that all technology-based training to be acceptable to EPA and OSHA is for the user have access, either on-site or by other means of communication, to a source of information to answer any specific questions that may occur during the technology-based training. Generally this is the supervisor, the local health and safety program manager, or an experienced employee. Under the existing CD-rom course (SHE'D Disk #2), ARM allows one hour of training credit per training module. The CD-rom includes 34 modules. Students are required to take a total of 24 modules to meet the health and safety requirements. Eighteen (18) specific modules are required to be taken. The student must then choose six (6) additional modules from the remaining 16 modules that address the type of work they routinely conduct. The SHE'D disk #2 only covers the basic EPA 24-hour course. Some of the modules can be used as part of the annual 8-hour refresher program.

Health and Safety Training Live Course	Limited availability in Edison, NJ, Cincinnati, OH and selected Regions.	This course is a full 40-hour course that covers employee rights and responsibilities, nature of anticipated hazards (in-depth), personal protective equipment, some safe use of field and sampling equipment, and transportation of hazardous materials. This course also covers emergency self-help and rescue, mandatory rules and regulations for vehicles, and specific field and sampling equipment procedures.
First aid and CPR courses	American Red Cross and other commercial vendors	These two courses can be combined in a one day event or taken separately. First aid courses offered by the Red Cross only need to be taken every 3 years. CPR courses are required every year.
Vehicle rules and regulations	Regional Health and Safety Training Officer. GSA or commercial vendors offer a defensive driving course.	Since EPA inspectors spend a considerable amount of time driving to conduct inspections, it is required that they know what to do in case of an accident or other mishap. In addition, since driving is a hazard of the job, inspectors should, on some routine basis, take a defensive driving course to hone and sharpen their skills.
Shipment of Hazardous Materials	ARM distributed a DOT course on CD-rom to the Regions. Courses are commercially available.	All inspectors who ship hazardous materials should take the DOT or commercially available course. Contact the Regional Safety and Health Program manager for details. OC recently transmitted a fact sheet for inspectors on DOT training requirements for shipping hazardous materials.
Other courses	ARM	ARM can be contacted for additional CD-rom and web-based courses to supplement field personnel training on topics such as radiation protection, due diligence-real property transfers, and OECA compliance training manuals.

APPENDIX E

SAMPLE SECTION 308 LETTER

This page intentionally left blank.

Certified Mail—Return Receipt Requested

Date

Dear Sir:

Pursuant to the authority contained in Section 308 of the Clean Water Act (33 U.S.C. 1251 et seq.), representatives of the U.S. Environmental Protection Agency (EPA), or a contractor retained by EPA, is planning to conduct a compliance monitoring inspection of your operations, including associated waste treatment and/or discharge facilities located at (site of inspection). This inspection will ascertain the degree of compliance with the requirements of the National Pollutant Discharge Elimination System (NPDES) permit issued to your organization.

Our representatives may observe your process operations, inspect your monitoring and laboratory equipment and methods, collect samples, and examine appropriate records, and they will be concerned with related matters.

In order to facilitate easy access to the plant site, please provide the name of the responsible facility official who can be contacted upon arrival at the plant. Additionally, we would appreciate receiving a list of the safety equipment you would recommend that our representatives have in their possession in order to enter and conduct the inspection safely. Please provide the information requested within 14 days of receipt of this letter.

If you have any questions concerning this inspection, please call (appropriate designated official).

Sincerely,

Director
Water Management Division

Sample Section 308 Letter

This page intentionally left blank.

APPENDIX F

FINAL FACT SHEET: THE DO'S AND DON'TS OF USING U.S. EPA CREDENTIALS

This page intentionally left blank.

DATED: JUNE 1, 2000; SIGNED: MICHAEL STAHL

MEMORANDUM

SUBJECT: Final Fact Sheet:
The United States Environmental Protection Agency Credentials Fact Sheet

FROM: Michael Stahl, Acting Director**s/ MICHAEL STAHL**
Office of Compliance

TO: See Attached List

Purpose The purpose of this memo is to transmit the final fact sheet on the United States Environmental Protection Agency (U.S. EPA) credentials. The fact sheet does not change existing EPA policies on credentials. The fact sheet is designed to inform EPA managers, supervisors, and employees of the overall process regarding U.S. EPA credentials. The fact sheet pertains only to EPA employees. The fact sheet contains information on the definition, policy, authority, language, issuing procedures, accountability, renewal, potential penalties for improper use, and specific do's and don'ts.

Process A draft fact sheet was transmitted for your review on April 14, 2000. The Office of Compliance (OC) received comments on the draft fact sheet from Regions 2, 3, 4, 6, 7 and 8, and from the Office of General Counsel (OGC), the Office of Environmental Justice (OEJ), the Office of Regulatory Enforcement (ORE), and the Office of Administration and Resource Management (OARM). The fact sheet was revised based on the comments.

Request Please distribute a copy of the fact sheet to all EPA employees holding EPA credentials. The fact sheet will also be posted on the OC Compliance Inspector Web Site. (http://intranet.epa.gov/oeca/oc/metd/inspector)

Future Procedure OARM will include a copy of the fact sheet with the credentials when they are renewed every three (3 years).

Thank you for your attention to this request.

Addressees:

Eric Schaeffer, Director, ORE
Leo D'Amico, Director, OCEFT
Barry Breen, Director, OSRE
James C. Nelson, Associate General Counsel, Cross-Cutting Issues Law Office
Barry Hill, Director, Office of Environmental Justice
John Fogarty, Acting Director, Office of Planning and Policy Analysis
Craig Hooks, Director, Federal Facilities Enforcement Office
Rich Lemley, Director, Facilities Management and Services Division
Steve Zeigler, Chief, Security and Property Management Branch
Regional Enforcement Division Directors, Regions I-X
Regional Science and Technology Division Directors, Regions I-X
Regional Enforcement Coordinators, Regions I-X
Regional Security Managers, Regions I-X
ORE Division Directors
OC Division Directors
OSRE Division Directors
Louis Halkias, Acting Director, Criminal Investigations Division
Jonathan Cole, Director, Legal Counsel and Resource Management Division
Diana A. Love, Director, NEIC
Gerald Bryan, Director, NETI
Yvette Jackson, OARM
Ken Gigliello, OC

The Do's and Don'ts of Using U.S. EPA Credentials

These do's and don'ts are established based on good management practices for ensuring the proper use of EPA credentials by *EPA employees*. The practical purpose of the do's and don'ts is to make EPA employees aware of the importance to safeguard credentials, and limit their use to ONLY enforcement functions.

DO'S	DON'TS
Do use for official duties described in the credentials	Do NOT use for non-enforcement government business
Do use to conduct compliance inspections	Do NOT allow anyone to hold or take possession of your credentials
Do use to conduct compliance investigations	Do NOT loan the credentials to anyone. This includes other EPA employees.
Do use when responding to environmental complaints and/or spills	Do NOT photocopy the credentials
Do use to conduct facility audits	Do NOT fail to report a lost or stolen credentials to your supervisor
Do use to verify status as an EPA official when interviewing witnesses in the field	Do NOT allow anyone else to photocopy or use the credentials
Do use as identification for entry into facilities regulated under federal environmental laws and regulations	
Do safeguard storage of credentials	
Do always immediately report if the EPA credentials is lost or stolen to your immediate supervisor	

FACT SHEET ON CREDENTIALS ISSUED TO EPA EMPLOYEES
DO'S AND DON'TS
5/23/00

Source: *EPA Security Manual, Physical Security Section, Volume 4850-1, dated 7/16/84*

DEFINITION The 1984 Security Manual defines an EPA credential as: "An EPA credential is a pocket warrant authorized by the Administrator, Assistant Administrator, or Regional Administrator that identifies the bearer as having the authority to act in an enforcement, inspection, survey, or investigation capacity." However, the EPA's legal authority to perform the enforcement, inspection, survey, or investigation functions is based on the applicable federal environmental statutes passed by the United States Congress and signed by the President of the United States. **The credential evidences the proper delegation of this authority and does not provide independently the authority to undertake these activities.**

POLICY EPA credentials should be issued **only to those officers and employees who routinely need them to actively perform official enforcement, inspection, survey or investigative functions.** EPA credentials generally are not issued to non-EPA employees, but in certain situations may be issued to State or tribal personnel, contractors, or grantees. In the event that non-EPA employees are authorized by the Administrator, Regional Administrator, or Assistant Administrator to possess EPA credentials, the credentials will be issued by the Regional Office, Lab, or other organization which has responsibility for overseeing the duties of the credentialed non-EPA employee.

LANGUAGE The language on the EPA credential states:

United States of America Environmental Protection Agency
This is to Certify that (EPA Employee's Name)
Whose Signature and Photograph Appear Below is a Duly Commissioned
(blank space for insertion of title)

Each credential includes ONE of the following titles:
Inspector, Compliance Officer, Enforcement Officer,
On-Scene Coordinator, Remedial Project Manager,
Debarment Counselor or Law Judge

Authorized to Conduct Official Investigations and
Inspections Pursuant to All Federal Laws
Administered by the United States
Environmental Protection Agency

ISSUANCE The requesting Headquarters program, media office, Regional office or Lab, should transmit a brief memorandum of justification to the Headquarters Office of Administration and Resources Management (OARM) requesting credentials to be issued to specific EPA employees. The memo should include the names, titles, organization, official duties, date of request, and the signature of requesting official. The requesting party is responsible for ensuring that the bearer has met applicable training requirements (e.g., EPA Order 3500.1). OARM (Security Management) will issue the federal credentials to the named employees after review of the information.

ACCOUNTABILITY Since credentials are issued only to assist the bearer in the performance of official duties, the credentials should be returned to OARM when the bearer leaves the position requiring the EPA credentials. The employee's office should send OARM a brief note explaining the reason the credentials are being returned (e.g., retirement, employee reassigned to a position not requiring a credential)

If the EPA credentials are lost or stolen, the bearer should promptly notify his or her immediate supervisor, in writing, and a copy should be sent to OARM. A brief report of the circumstances surrounding the loss or theft should be forwarded to the Security Management Staff along with the new request. If a new set of credentials is required, the above procedures will be followed. **Failure to promptly notify the supervisor of a lost or stolen credential could result in disciplinary action against the bearer.**

RENEWAL EPA credentials will be renewed every three (3) years by OARM. The Security Management Official will transmit a list of Regional employees whose credentials will expire to the Security Representative in each Region for review. The Security representative is responsible for ensuring that all listed personnel still have a need for the credential and applicable training is up-to-date. Once the list has been updated and returned to the HQ Security Management Official, OARM will renew the Regional credentials. All credentials are reissued on a rolling monthly basis to each Region (e.g., January for Region I, February for Region II, etc.)

Each Headquarters Office will receive a listing of employees whose credentials will expire. The Office Director is responsible for ensuring that all listed personnel still have a need for the credential and applicable training is up-to-date. OARM will renew these credentials on a first-come, first-served basis. All Headquarters credentials expire in December of the calendar year.

This page intentionally left blank.

APPENDIX G

EPA'S MEMORANDUM ON ENTRY PROCEDURES

This page intentionally left blank.

UNITED STATES ENVIRONMENTAL PROTECTION AGENCY
WASHINGTON, D.C. 20460

11 APR 1978

MEMORANDUM

OFFICE OF ENFORCEMENT

TO: Regional Administrators
Surveillance and Analysis Division Directors
Enforcement Division Directors

FROM: Assistant Administrator for Enforcement

SUBJECT: Conduct of Inspections After the Barlow's Decision

I. Summary

This document is intended to provide guidance to the Regions in the conduct of inspections in light of the recent Supreme Court decision in Marshall v. Barlow's, Inc., __ U.S.__, 98 S. Ct. 1816 (1978). The decision bears upon the need to obtain warrants or other process for inspections pursuant to EPA-administered Acts.

In Barlow's, the Supreme Court held that an OSHA inspector was not entitled to enter the non-public portions of a work site without either (1) the owner's consent, or (2) a warrant. The decision protects the owner against any penalty or other punishment for insisting upon a warrant.

In summary, Barlow's should only have a limited effect on EPA enforcement inspections:

- Inspections will generally continue as usual;
- Where an inspector is refused entry, EPA will seek a warrant through the U.S. Attorney;
- Sanctions will not be imposed upon owners of establishments who insist on a warrant before allowing inspections of the non-public portions of an establishment.

The scope of the Barlow's decision is broad. It affects all current inspection programs of EPA, including inspections conducted by State personnel and by contractors. The Agency's procedures for inspections, particularly where entry is denied, were largely in accord with the provisions of Barlow's before the Supreme Court issued its ruling. Nevertheless, a number of changes in Agency procedure are warranted. Thus, it is important that all personnel involved in the inspection process be familiar with the procedural guidelines contained in this document.

This document focuses on the preparation for and conduct of inspections, including (1) how to proceed when entry is denied, (2) under what circumstances a warrant is necessary, and (3) what showing is necessary to obtain a warrant.

II. Conduct of Inspections

The following material examines the procedural aspects of conducting inspections under EPA-administered Acts. Inspections are considered in three stages: (1) preparation for inspection of premises, (2) entry onto premises, and (3) procedures to be followed where entry is refused.

A. Preparation

Adequate preparation should include consideration of the following factors concerning the general nature of warrants and the role of personnel conducting inspections.

(1) Seeking a Warrant Before Inspection

The Barlow's decision recognized that, on occasion, the Agency may wish to obtain a warrant to conduct an inspection even before there has been any refusal to allow entry. Such a warrant may be necessary when surprise is particularly crucial to the inspection, or when a company's prior bad conduct and prior refusals make it likely that warrantless entry will be refused. Pre-inspection warrants may also be obtained where the distance to a U.S. Attorney or a magistrate is considerable so that excessive travel time would not be wasted if entry were denied. At present, the seeking of such a warrant prior to an initial inspection should be an exceptional circumstance, and should be cleared through Headquarters. If refusals to allow entry without a warrant increase, such warrants may be sought more frequently. (For specific instructions on how to obtain a warrant, see Part D.)

(2) Administrative Inspections v. Criminal Investigations

It is particularly important for both inspectors and attorneys to be aware of the extent to which evidence sought in a civil inspection can be used in a criminal matter, and to know when it is necessary to secure a criminal rather than a civil search warrant. There are three basic rules to remember in this regard: (1) If the purpose of the inspection is to discover and correct, through civil procedures, noncompliance with regulatory requirements, and administrative inspection (civil) warrant may be used; (2) if the inspection is in fact intended , in whole or in part, to gather evidence for a possible criminal prosecution, a criminal search warrant must be obtained under Rule 41 of the Federal Rules of Criminal Procedure; and (3) evidence obtained during a valid civil inspection is generally admissible in criminal proceedings. These principles arise from the recent Supreme Court cases of Marshall v. Barlow's, Inc., supra; Michigan v. Tyler, __U.S.__, 98 S.Ct. 1942 (1978); and U.S. v. LaSalle National Bank, __U.S.__, 57 L. Ed: 2d 221 (1978). It is not completely clear whether a combined investigation for civil and criminal violations may be properly conducted under civil or "administrative" warrant, but we believe a civil warrant can properly be used unless the intention is clearly to conduct a criminal investigation.

(3) The Use of Contractors to Conduct Inspections

Several programs utilize private contractors to aid in the conduct of inspections. Since, for the purpose of inspections, these contractors are agents of the Federal government, the restrictions of the Barlow's decision also apply to them. If contractors are to be conducting inspections without the presence of actual EPA inspectors, these contractors should be given training in how to conduct themselves when entry is refused. With respect to obtaining or executing a warrant, an EPA inspector should always participate in the process, even if he was not at the inspection where entry was refused.

(4) Inspections Conducted by State Personnel

The Barlow's holding applies to inspections conducted by State personnel and to joint Federal/State inspections. Because some EPA programs are largely implemented through the States, it is essential that the Regions assure that State-conducted inspections are conducted in compliance with the Barlow's decision, and encourage the State inspectors to consult with their legal advisors when there is a refusal to allow entry for inspection purposes. State personnel should be encouraged to contact the EPA Regional Enforcement Office when any questions concerning compliance with Barlow's arise.

With regard to specific procedures for States to follow, the important points to remember are: (1) The State should not seek forcible entry without a warrant or penalize an owner for insisting upon a warrant, and (2) the State legal system should provide a mechanism for issuance of civil administrative inspection warrants. If a State is enforcing an EPA program through a State statute, the warrant process should be conducted through the State judicial system. Where a State inspector is acting as a contractor to the Agency, any refusal to allow entry should be handled as would a refusal to an Agency inspector as described in section II.B.3. Where a State inspector is acting as a State employee with both Federal and State credentials, he would utilize State procedures unless the Federal warrant procedures are more advantageous, in which case, the warrant should be sought under the general procedures described below. The Regions should also assure that all States which enforce EPA programs report any denials of entry to the appropriate Headquarters Enforcement Attorney for the reasons discussed in section II.B.4.

B. Entry

(1) Consensual Entry

One of the assumptions underlying the Court's decision is that most inspections will be consensual and that the administrative inspection framework will thus not be severely disrupted. Consequently, inspections will normally continue as before the Barlow's decision was issued. This means that the inspector will not normally secure a warrant before undertaking an inspection but, in an attempt to gain admittance, will present his credentials and issue a notice of inspection where required. The establishment owner may complain about allowing an inspector to enter or otherwise express his displeasure with EPA or the Federal government. However, as long as he allows the inspector to enter, the entry is voluntary and consensual unless the inspector is expressly told to leave the premises. On the other hand, if the inspector has gained entry in a coercive manner (either in a verbal or physical sense), the entry would not be consensual.

Consent must be given by the owner of the premises or the person in charge of the premises at the time of the inspection. In the absence of the owner, the inspector should make a good faith effort to determine who is in charge of the establishment and present his credentials to that person. Consent is generally needed only to inspect the non-public portions of an establishment - i.e., any evidence that an inspector obtains while in an area open to the public is admissible in an enforcement proceeding.

(2) Withdrawal of Consent

The owner may withdraw his consent to the inspector at any time. The inspection is valid to the extent to which it has progressed before consent was withdrawn. Thus, observations by the inspector, including samples and photographs, obtained before consent was withdrawn, would be admissible in any subsequent enforcement action. Withdrawal of consent is tantamount to a refusal to allow entry and should be treated as discussed in section II.B.3. below, unless the inspection had progressed far enough to accomplish its purposes.

(3) When Entry is Refused

Barlow's clearly establishes that the owner does have the right to ask for a warrant under normal circumstances.[1] Therefore, refusal to allow entry for inspection purposes will not lead to civil or criminal penalties if the refusal is based on the inspector's lack of warrant and one of the exemptions discussed in Part C does not apply. If the owner were to allow the inspector to enter his establishment only in response to a threat of enforcement liability, it is quite possible that any evidence obtained in such an inspection would be inadmissible. An inspector may, however, inform the owner who refused entry that he intends to seek a warrant to compel the inspection. In any event, when entry is refused, the inspector should leave the premises immediately and telephone the designated Regional Enforcement Attorney as soon as possible for further instructions. The Regional Enforcement Attorney should contact the U.S. Attorney's Office for the district in which the establishment desired to be inspected is located and explain to the appropriate Assistant United States Attorney the need for a warrant to conduct the particular inspection. The Regional Attorney should arrange for the United States Attorney to meet with the inspector as soon as possible. The inspector should bring a copy of the appropriate draft warrant and affidavits. Samples are provided in the appendix to this document.

(4) Headquarters Notification

It is essential that the Regions keep Headquarters informed of all refusals to allow entry. The Regional Attorney should inform the appropriate Headquarters Enforcement Attorney of any refusals to enter and should send a copy of all papers filed to Headquarters. It is necessary for Headquarters to monitor refusals and Regional success in obtaining warrants to evaluate the need for improved procedures and to assess the impact of Barlow's on our compliance monitoring progress.

[1] FIFRA inspections are arguably not subject to this aspect of Barlow's. See discussion, p. 5 and 6.

C. Areas Where a Right of Warrantees Entry Still Exists

(1) Emergency Situations

In an emergency, where there is no time to get a warrant, a warrantees inspection is permissible. In Camera v. Municipal Court, 387 U.S. 523 (1967), the Supreme Court states that "nothing we say today is intended to foreclose prompt inspections, even without a warrant, that the law has traditionally upheld in emergency situations." Nothing stated in Barrow's indicates any intention by the court to retreat from this position. The Regions will always have to exercise considerable judgement concerning whether to secure a warrant when dealing with an emergency situation. However, if entry is refused during and emergency, the Agency would need the assistance of the U.S. Marshal to gain entry, and a warrant could probably be obtained during the time necessary to secure that Marshal's assistance.

An emergency situation would include potential imminent hazard situations, as well as situations where there is potential for destruction of evidence or where evidence of a suspected violation may disappear during the time that a warrant is being obtained.

(2) FIFRA Inspection

There are some grounds for interpreting Barrow's as not being applicable to FIFRA inspections. The Barrow's restrictions do not apply to areas that have been subject to a long standing and pervasive history of government regulation. An Agency administrative law judge held recently that even after the Barrow's decision, refusal to allow a warrantees inspection of a FIFRA regulated establishment properly subjected the owner to civil penalty. N. Jones & Co., Inc., I.F. & R Docket No. III-121C (July 27, 1978). For the present, however, FIFRA inspections should be conducted under the same requirements applicable to other enforcement programs.

(3) "Open Fields" and "In Plain View" Situations

Observation by inspectors of things that are in plain view, (i.e., of things that a member of the public could be in a position to observe) does not required a warrant. Thus, an inspector's observations from the public area of a plant or even from certain private property not closed to the public are admissible. Observations made even before presentation of credentials while on private property which is not normally closed to the public are admissible.

D. Securing a Warrant

There are several general rules for securing warrants. Three documents have to be drafted: (a) an application for a warrant, (b) an accompanying affidavit, and (c) the warrant itself. Each document should be captioned with the District Court of jurisdiction, the title of the action, and the title of the particular document.

The application for a warrant should generally identify the statutes and regulations under which the Agency is seeking the warrant, and should clearly identify the site or establishment desired to be inspected (including, if possible, the owner and/or operator of the site). The application can be a one or two page document if all of the factual background for seeking the warrant is stated in the affidavit, and the application so

states. The application should be signed by the U.S. Attorney or by his Assistant U.S. Attorney.

The affidavits in support of the warrant application are crucial documents. Each affidavit should consist of consecutively numbered paragraphs, which describe all of the facts that support warrant issuance. If the warrant is sought in the absence of probable cause, it should recite or incorporate the neutral administrative scheme which is the basis for inspecting the particular establishment. Each affidavit should be signed by someone with personal knowledge of all the facts stated. In cases where entry has been denied, this person would most likely be the inspector who was denied entry. Note that an affidavit is a sworn statement that must either be notarized or personally sworn to before the magistrate.

The warrant is a direction to an appropriate official (an EPA inspector, U.S. Marshal or other Federal officer) to enter a specifically described location and perform specifically described inspection functions. Since the inspection is limited by the terms of the warrant, it is important to specify to the broadest extent possible the areas that are intended to be inspected, any records to be inspected, any samples to be taken, and any articles to be seized, etc. While a broad warrant may be permissible in civil administrative inspections, a vague or overly broad warrant will probably not be signed by the magistrate and may prove susceptible to constitutional challenge. The draft warrant should be ready for the magistrate's signature at the time of submission via a motion to quash and suppress evidence in Federal District court. Once the magistrate signs the draft warrant, it is an enforceable document. Either following the magistrate's signature or on a separate page, the draft warrant should contain a "return of service" or "certificate of service". This portion of the warrant should indicate upon whom the warrant was personally served and should be signed and dated by the inspector. As they are developed, more specific warrant issuance documents will be drafted and submitted to the Regions.

E. Standards or Bases for the Issuance of Administrative Warrants

The Barrow's decision establishes three standards or bases for the issuance of administrative warrants. Accordingly, warrants may be obtained upon a showing: 1) of traditional criminal probable cause, 2) of civil probable cause, or 3) that the establishment was selected for inspection pursuant to a neutral administrative inspection scheme.

(1) Civil Specific Probable Cause Warrant

Where there is some specific probable cause for issuance of a warrant such as an employee complaint or competitor's tip, the inspector should be prepared to describe to the U.S. Attorney in detail the basis for this probable cause.

The basis for probable cause will be stated in the affidavit in support of the warrant. This warrant should be used when the suspected violation is one that would result in a civil penalty or other civil action.

(2) Civil Probable Cause Based on a Neutral Administrative Inspection Scheme

Where there is no specific reason to think that a violation has been committed, a warrant may still be issued if they Agency can show that the establishment is being inspected pursuant to a neutral administrative scheme. As the Supreme Court stated in Barrow's:

> "Probable cause in the criminal law sense is not required. For purposes of an administrative search, such as this, probable cause justifying the issuance of a warrant may be based not only on specific evidence of an existing violation, but also on a showing that "reasonable legislative or administrative standards for conducting an . . . inspection are satisfied with respect to a particular (establishment)." A warrant showing that a specific business has been chosen for an OSHA search on the basis of a general administrative plan for the enforcement of the act derived from neutral sources such as, for example, dispersion of employees in various type of industries across a given area, and the desired frequency of searches in any of the lesser divisions of the area, would protect an employers Fourth Amendment rights.

Every program enforced by the Agency has such a scheme by which it prioritizes and schedules its inspections. For example, a scheme under which every permit holder in a given program is inspected on an annual basis is a satisfactory neutral administrative scheme. Also, a scheme in which one out of ever three known PCB transformer repair shops is inspected on an annual basis is satisfactory, as long as neutral criteria such as random selection are used to select the individual establishment to be inspected. Headquarters will prepare and transmit to the Regions the particular neutral administrative scheme under which each program's inspections are to be conducted. Inspections not based on specific probable cause must be based on neutral administrative schemes for a warrant to be issued. Examples of two neutral administrative schemes are provided in the appendix. (Attachments II and III)

The Assistant U.S. Attorney will request the inspector to prepare and sign an affidavit that states the facts as he knows them. The statement should include the sequence of events culminating in the refusal to allow entry and a recitation of either the specific probable cause or the neutral administrative scheme which led to the particular establishment's selection for inspection. The Assistant U.S. Attorney will then present a request for an inspection warrant, a suggested warrant, and the inspector's affidavit to a magistrate or Federal district court judge.[2]

---

[2] The Barrow's decision states that imposing the warrant requirement on OSHA would not invalidate warrantees search provisions in other regulatory statutes since many such statutes already "envision resort to Federal court enforcement when entry is refused". There is thus some question as to whether the existence of a non-warrant Federal court enforcement mechanism in a statute requires the use of that mechanism rather than warrant issuance. We believe that the Barrow's decision gives the Agency the choice of whether to proceed through warrant issuance or through an application for an injunction, since the decision is largely based on the fact that a warrant procedure imposes virtually no burden on the inspecting Agency. In addition, any Agency could attempt to secure a warrant prior to inspection on an ex parte basis, something not available under normal injunction proceedings. Several of the acts enforced by the EPA have provisions allowing the Administrator to seek injunctive relief to assure compliance with the various parts of a particular statute. There may be instances where it would be more appropriate to seek injunctive relief to gain entry to a facility than to attempt to secure a warrant for inspection, although at this point we cannot think of any. However, since the warrant process will be far more expeditious than the seeking of an injunction, any decision to seek such an injunction for inspection purposes should be cleared through appropriate Headquarters staff.

(3) Criminal Warrants

Where the purpose of the inspection is to gather evidence for a criminal prosecution, the inspector and the Regional Attorney should request that the U.S. Attorney seek a criminal warrant under Rule 41 of the Federal Rules of Criminal Procedure. This requires a specific showing of probable cause to believe that evidence of a crime will be discovered. Agency policy on the seeking of criminal warrants has not been affected by Barrow's. The distinction between administrative inspections and criminal warrant situations is discussed in Section II.A.2.

F. Inspecting with a Warrant

Once the warrant has been issued by the magistrate or judge, the inspector may proceed to the establishment to commence or continue the inspection. Where there is a high probability that entry will be refused even with a warrant or where there are threats of violence, the inspector should be accompanied by a U.S. Marshal when he goes to serve the warrant on the recalcitrant owner. The inspector should never himself attempt to make any forceful entry of the establishment. If the owner refuses entry to an inspector holding a warrant but not accompanied by a U.S. Marshal, the inspector should leave the establishment and inform the Assistant to the U.S. Attorney and the designated Regional Attorney. They will take appropriate action such as seeking a citation for contempt. Where the inspector is accompanied by a U.S. Marshal, the Marshal is principally charged with executing the warrant. Thus, if refusal or threat to refuse occurs, the inspector should abide by the U.S. Marshal's decision whether it is to leave, to seek forcible entry, or otherwise.

The inspector should conduct the inspection strictly in accordance with the warrant. If sampling is authorized, the inspector must be sure to carefully follow all procedures, including the presentation of receipts for all samples taken. If records or other property are authorized to be taken, the inspector must receipt the property taken and maintain an inventory of anything taken from the premises. This inventory will be examined by the magistrate to assure that the warrant's authority has not been exceeded.

G. Returning the Warrant

After the inspection has been completed, the warrant must be returned to the magistrate. Whoever executes the warrant, (i.e., whoever performs the inspection), must sign the return of service form indicating to whom the warrant was served and the date of service. He should then return the executed warrant to the U.S. Attorney who will formally return it to the magistrate or judge. If anything has been physically taken from the premises, such as records or samples, an inventory of such items must be submitted to the court, and the inspector must be present to certify that the inventory is accurate and complete.

III. Conclusion

Except for requiring the Agency to formalize its neutral inspection schemes, and for generally ending the Agency's authority for initiating civil and/or criminal actions for refusal to allow warrantees inspections, Barrow's should not interfere with EPA enforcement inspections.

Where there is doubt as to how to proceed in any entry case, do not hesitate to call the respective Headquarters program contact for assistance.

Marvin B. Durning

APPENDIX H

Digital Camera Guidance for EPA Civil Inspections and Investigations

This page intentionally left blank.

U.S. EPA - Office of Compliance (Mail Code: 2223A)
National Compliance Monitoring Policy Branch
1200 Pennsylvania Avenue, N.W.
Washington, DC 20460
EPA-305-F-06-002

Digital Camera Guidance for EPA Civil Inspections and Investigations

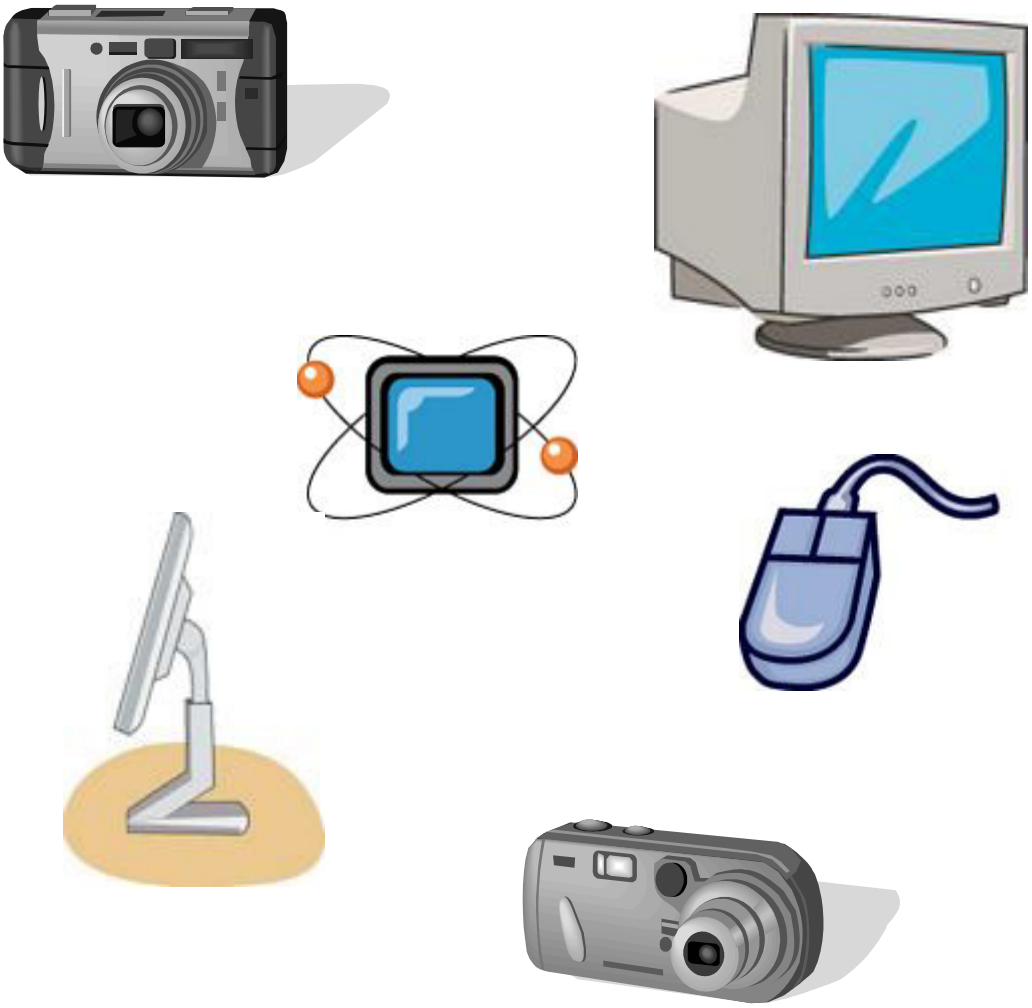

July 2006

USE OF DIGITAL CAMERAS FOR CIVIL INSPECTIONS AND INVESTIGATIONS

STATEMENT OF GUIDANCE

EPA has determined it is acceptable to use digital cameras/photographs for documenting civil inspections and investigations provided certain requirements are met. This document is for guidance purposes only. Photographs recorded, maintained, or reproduced in a manner other than as described in the recommended steps may nevertheless be used as evidence in developing or going forward with an agency action. However, the person responsible for such photographs should consult with EPA counsel on the appropriate use, handling, and documentation of such photographs. This document is intended for the guidance of EPA staff. It does not set forth requirements that are binding on EPA staff or on third parties or courts. The fact that a particular requirement set forth in this document is not satisfied shall not be relevant to the admissibility or legal force of a particular digital photograph.

INTRODUCTION

EPA inspectors often include photographs taken during the inspection in the inspection report to support their observations. Generally, EPA inspection manuals for specific programs address the use of photographs. In recent years, inspectors have begun to use digital cameras. The use of digital images presents somewhat different issues related to the use of these electronic images as evidence. To be effective, the image should be of sufficient clarity and detail to support the observations, and should represent what the inspector saw with the appropriate level of detail. Credibility of the digital image (as well as any photographic image whether digital or film) and acceptability in court (i.e. evidence) depends on the ability of the photographer (or the witness who was present when the photograph was taken) to authenticate the photograph by answering the simple question: Is this a fair and accurate representation of what you saw? To address potential concerns, this document sets forth EPA's guidance on the use of digital photographs and identifies requirements necessary to ensure the integrity of the pictures.

The document addresses image capturing, storage, and handling. In addition, this document provides an overview of digital camera technology, peripheral equipment, and recommended steps found in Appendix A. Credibility of digital images in court usually depend on reliability, reproducibility, and security. It is acceptable to make changes to digital images such as cropping, enlarging, or making it lighter/darker to improve the sharpness provided the inspector does all the following:

- Records how, when, and where the picture was taken;
- Logs the steps used in processing the image when they include techniques other than those used in a traditional photographic darkroom;

- Complies with a written SOP that includes the recommended steps set forth in this document; and
- Ensures the preservation of the original digital image.

RECOMMENDED PROCEDURES

Inspectors should take precautions to ensure the integrity of the digital image and resulting photographs because these are easy to manipulate. Appendix B of this document provides technical information and considerations related to digital camera use. Inspectors should ensure they meet the following minimum requirements when using digital photographs to document EPA civil inspections and investigations:

A. The integrity of the digital image should be preserved:

1. When inspectors use digital photographs as evidence, the person testifying should be able to verify the authenticity of the printed image. This includes knowledge on how the image was acquired, its relevance to the case, and how it corroborates testimony as to issues which may be disputed in the case.

2. The quality of the photograph should be good enough to show details, objects, and relevant information.

B. Inspectors using a digital camera for inspections should be able to capture, store, print, and handle digital images properly:

1. Inspectors should have equipment which will allow the secure use and storage of the digital images such as storage media, printer, and computer. (The Basic Technical Information Section, Appendix B, provides further details on equipment).

2. The inspector should follow the recommended steps for handling the digital image. Each Regional office with inspection authority using digital cameras should develop recommended steps governing their use. Appendix A of this document contains a model of the recommended steps.

3. The inspector should not delete any digital images while conducting an inspection regardless of whether they are of poor quality.

4. A record of any copies of the digital images given to a facility should be kept in EPA's inspection file. The record should identify and describe the digital images and can be noted in the field notes, on a Photo-Log, or as a separate list.

5. Protect CBI. Digital photos which may contain Confidential Business Information (CBI) should not be sent via e-mail. When taking, storing, using, or transferring

digital photos which contain CBI data inspectors should follow standard CBI procedures regarding use of computers and electronic storage media at all times.

C. Inspectors should maintain an Archival Copy of all images taken:

1. Inspector/photographer should create an archival copy[1] of all original images taken during the inspection as soon as practical after image capture. Inspectors should NOT delete any photographs taken. This archival copy should be labeled and maintained in the inspection file in a secure location. Any enhancements needed on the image should be made only to a working copy.[2] (NEVER EDIT THE ORIGINAL IMAGES OR ARCHIVAL COPY). Ideally unalterable storage media such as a read-only Compact Disk (CD-R) should be used to create the archival copy. If this option is not available, other storage media (including alterable) may be used for the archival copy, provided the images can be verified and Chain-of-Custody procedures are followed to prevent tampering. When using an alterable storage media, cyclic redundancy check[3] software can be used to verify the images.

2. When mailing the archival copy via postal mail, inspectors should place the storage media in a protective jacket, pouch, or equivalent with a custody seal and follow the procedures used for mailing samples to ensure its integrity.

3. If digital images are CBI, CD's containing there images should be stored following appropriate CBI procedures.

D. The inspector should keep a Photo-Log in the inspection file of all the photographs taken including the printed images referenced in the inspection report:

1. The Photo-log is a record of the archival copy, which includes all the photographs taken during the inspections.

2. The record should include: identity of the photographer, date, time, location, [including information identifying the location such as EPA Identification numbers, latitude, and longitude], and a brief description of the pictures, (including anything

---

[1]An archival copy is an unchanged, unedited copy of the original images that will be used as the permanent record. It is the functional equivalent to the "negatives" in film photography.

[2]The working copy is the "back-up" copy of the original images which may be used to make minor enhancements or edits such as cropping and improving contrast.

[3]Cyclic Redundancy Check (CRC) is a technique to obtain data reliability. It is used to protect blocks of data called Frames. The CRC performs a mathematical calculation on a block of data and returns a number that represents the content and organization of that data, a checksum. By comparing the checksum of one block of data to another, it can be determined wether they match.

worthy of special note). This record may be a list of the photos noted as part of the field notes, may be a separate photo list, or a separate Photo-Log.

3. For working copies, If images are transferred from one storage media to another or changes are made to an image, EPA should keep a record in the inspection file of the identity of the person making the transfer/change and the date of transfer or change. The record should include the type of change. Minor edits can be made to the working copy such as cropping, reduction, enlargement, or contrast improvement. Each change should be saved as a separate image file and documented so that all enhancements can be reconstructed, if necessary.

4. The inspection report should contain printed copies of the digital photos referenced in the report. The printed images should be initialed by the inspector and dated when the photo was taken (unless the photo is already imprinted with the date taken).

REFERENCES/ADDITIONAL INFORMATION

1. Berg, Erik, "Legal Ramifications of Digital Imaging In Law Enforcement", Forensic Science Communications, Vol 2, No. 4, October 2000, Available at www.fbi.gov/hq/lab/fsc/backissu/oct2000/berg.htm.

2. Azcarate, Penney, "Digital Imaging Technology and the Prosecutor", Prosecutor, January/February 2000, (34 FEB Prosecutor 26). Available at http://www.paamtrafficsafety.com/hot_topics/digital.pdf.

3. "Guidelines for Field Applications of Imaging Technologies", Scientific Working Group on Imaging Technologies (SWGIT), Version 2.0, June 8, 1999, Forensic Science Communications, Vol. 2, No. 1, January 2000, Available at www.fbi.gov/hq/lab/fsc/backissu/jan2000/swigit.htm.

4. "Definitions and Guidelines for Use of Imaging Technologies in the Criminal Justice System", Scientific Working Group on Imaging Technologies, Version 2.2, December 7, 2000, Forensic Science Communications, Vol. 3, No. 3, July 2001, Available at http://www.fbi.gov/hq/lab/fsc/backissu/july2001/swgitltr.htm.

5. Camp, William W., "Practical Uses of Digital Photography In Litigation", ATLA Annual Convention Reference Materials, July 2000, Volume 2, Attorney's Information Exchange Group (AIEG).

6. Keane, James I., "585 Prestidigitalization: Magic, Evidence and Ethics In Forensic Digital Photography", Ohio Northern Law Review, 1999, Twenty-second Annual Law Review Symposium Courtroom 2000: Technology and the Legal System Symposium Article (25 Ohio N U I. Rev.585).

7. Carbine, James E. and McLain, Lynn, "Proposed Model Rules Governing the Admissibility of Computer-Generated Evidence", January 1999, Santa Clara Computer and High Technology Law Journal (15 Santa Clara Computer & High Tech L.J. 1).

8. Lynch, Peter A. "Digital Cameras and the Fire Investigator: A Trap for the Unwary", Cozen & O'Connor, San Diego Regional Office. Available at www.interfire.org/features/camera.asp.

9. Staggs, Steven, "The Admissibility of Digital Photographs In Court". Available at www.crime-scene-investigator.net/admissibilityofdigital.html.

10. Herbert, Rusty and Gigger, Richard, (EPA Region 6), "Background Information for Digital and Photographic Imaging" and "Draft Region 6 Standard Operating Procedure Digital Camera Imaging" June 2001.

11. Blitzer, Herbert L. and Jacobia, Jack, Forensic Digital Imaging and Photography, Academic Press, 2002.

12. TSCA Confidential Business Information Security Manual, Office of Pollution Prevention and Toxics, April 1995.

Websites:

1. www.digital-camerastore.com/digitalinfor2.htm - good basic info and lists of cameras/prices.

2. www.cliffshade.com/dpfwiw/advice.htm – "Advice for first-time digital camera users", – good overview of digital camera use with links to more information.

3. www.cooking-italian-food.com/photography.htm – "Digital Camera Guide - Photography Definitions and Terminology", - discussion of resolution, optical/digital zoom, ISO, storage media, and other basic terminology.

4. "An Introduction to Image Compression", - www.debugmode.com/imagecmp/.
5. "Resolution, File Size & Image Quality", - www.haroldsphoto.com/digital.asp.

6. "Frequently Asked Questions on Digital Photography", - www.photodrive.ru/faq6_e.htm.

7. Maresware Forensic and Analysis Software - a list of commercial forensic software, including cyclic redundancy check. www.dmares.com/maresware/DOCS/press_release.htm.

8. "Error Detection and Correction", - description of Cyclic Redundancy Check - www.linktionary.com/e/error.html.

9. "Understanding Cyclic Redundancy Check", - http://4d.com/acidoc/CMU/CMU79909.htm. a description of how the CRC error detection system algorithm works.

10. photoalley.com - on-line digital camera "store".

APPENDIX A

Recommended Steps for the Use of Digital Cameras

A. Creating Digital Pictures

1. Camera Use

The Inspector should be familiar with the camera's features before using it during inspections. He/she should read appropriate manuals and practice using the camera before an inspection. In addition, the inspector should know the following:

- How to store an image;
- The capacity of the storage media being used;
- How to transfer images from one storage media to another;
- How and what is needed to print good quality images;
- How to use the different settings (resolution choice, digital zoom, close-up, flash, etc.); and
- The camera's limitations (weather, zooming, lighting).

2. Preparing to Take Pictures

Before taking pictures, the inspector should:

- Ensure that the camera and supporting equipment are appropriate to the task. The camera should possess appropriate resolution and capacity for the type of photo required, including close-up or distance photos, if needed;
- Ensure that the camera is in working order;
- Check the settings – make sure the date/time settings are properly set;
- Make sure there is adequate storage media for the projected number of photos needed; and
- Make sure that fresh and back-up batteries are available.

B. Photo Image Storage/Handling and Security.

1. Storing/Handling Images.

The inspector should use the following procedures when storing/handling digital images:

- Number each Storage Media (storage card, smart media, or other card) sequentially and label it with the name of the facility and date taken. Indicate what pictures from the inspection are contained on each.
- Store each incident/inspection's images on one storage media card, if possible, clearly identifying pictures captured for each inspection.

- Images from one incident/inspection should not be split between two electronic storage cards unless the storage media does not have enough memory to store all the images from one inspection/incident.
- Before each inspection create an “end-card” image label and photograph it.
- If images from more than one incident/inspection need to be captured on a single storage card, insert a “blank” image after the “end card” image.
- Ensure that there is adequate space on your hard drive, and as soon as possible after each incident/inspection, download the images from the camera’s storage media to the hard drive of the computer, verifying that the images have been successfully transferred. (DO NOT CHANGE THE IMAGES IN ANY WAY).
- Using the downloaded images, copy them to a CD-R or other permanent storage media to create the archival copy. (Do not edit or change the image).
- Label the archival copy with the time, date, name of facility/site, and “Archival Copy”.
- File the archival copy with inspection report in a secure location. If the archival copy is on alterable storage media, file it with a Chain of Custody form.
- Once an archival copy is securely filed, the original storage media may be erased and re-used.
- Create a second copy (“Working Images”) from the downloaded images to use for enhancements such as cropping or contrast. Label this “Working Images”.
- If any images are changed, save each change as a separate file so that it can be replicated, if necessary.
- Note any image changes and record the file numbers on the Photo-Log or photo record and include it with the Inspection Report.
- Once the archival copy and a working copy have been made, the images may be removed from the hard drive to free up memory, if needed.

2. Image Security.

The original images and/or archival copy should be stored either with the inspection file, in a locked file cabinet, or in an other secure location. If any of the information is CBI, all CBI procedures should be followed, including use of secure computers, storage media, data handling, and transmission. See your local Document Control Officer if you have any questions regarding proper CBI procedures.

- If the archival copy is kept on alterable storage media (such as USB), each archival copy should have a Chain of Custody form to document access to the images.

  The Chain of Custody form should include:
  1. The identity of the photographer;
  2. The date and location where the photos were taken;
  3. The file identification numbers of the photos in the set; and
  4. A log to record the identity, signature, date, and time of any person having access to the photos/images.

- If the archival copy is stored on alterable media:
  1. Each person viewing or using the archival copy should sign the Chain of Custody Log; and
  2. To send via postal mail to another location, place it in a jacket, pouch, or equivalent holder with a custody seal and the Chain of Custody form (follow the same procedures used when mailing samples).

- The Region should have a file management procedure in place mandated by EPA Records Schedule 211 and EPA Records Management Regulations which can be found at: http://www.epa.gov/records/policy/schedule/sched/211.htm.

- Inspector should be careful when handling images and avoid extreme temperatures, electricity, x-rays (airports), power surges, or other similar events, which might cause electrostatic interference and thus impact the image quality.

APPENDIX B

Basic Technical Information Section Related to Digital Camera Use

Digital and film photography share many similarities. Both create an image through the use of a light-sensitive medium. In the case of digital cameras, light falls on a grid of detectors known as a charge coupled device, CCD, and produces a pattern of electrical charges that are measured, converted to numbers, and stored. Each value in the grid corresponds to a picture element, (also known as a pixel) in the digital image.[4] The electrical output of the CCD is sent to a converter that changes the image to a digital output which is then stored in the camera as a computer data file with each file representing a different photograph.[5] The following information includes a discussion of some important factors relevant to digital camera use.

Resolution

Digital camera resolution is the amount of sharpness or detail in the image and is dependent on the number of pixels in the image. This is generally determined by the number of pixels across the width and height of the CCD. Pixel count is established by multiplying these numbers. Therefore, it is important to know the maximum CCD resolution (total number of pixels in a camera's sensor) in order to know the film equivalent capability of the digital camera. This is generally stated as "x" Mega Pixels. For example, 1280 x 960 pixels would give the film resolution of a 5" x 7" print and 1600 x 1200 pixels would give the film resolution of a 8" x 10" print.

For higher quality, multi-purpose use, CCD resolution in the 3.1+ mega pixel range is needed. Higher mega pixel levels allows creation of a greater number of images with a high level of detail that will not be lost if the image should be enlarged. This is important where larger photos may be necessary and/or where greater detail is important. It is also important if more than a few high resolution pictures are going to be needed during an inspection.

The quality of a printed photo is only partially dependent on the camera resolution. Printer resolution capability is also an important factor when printing photos.

Photo Storage and Printing

Storage and printing are other important considerations for the use of digital cameras. The computer is most often the mechanism used to store and print digital photos. To transfer images from the digital camera's memory to the computer, the camera is connected to the computer using a Universal Serial Bus (USB) port. Most computers have a USB port that simply

---

[4]Erik C. Berg, "Legal Ramifications of Digital Imaging in Law Enforcement", *Forensic Science Communications*, October 2000.

[5]Penney Azcarate, "Digital Imaging Technology and the Prosecutor", *Prosecutor*, January/February 2000.

connects to the camera with a plug-in cable and images can be downloaded to the hard drive. If a USB port is not available, a card reader can be connected to the printer port to transfer images to the computer and the images then can be stored on the computer's hard drive. However, if the hard drive were to fail the images could be lost so back-up storage is necessary. Some cameras are also equipped to transfer the images directly from the camera to the computer. The disadvantage of this system is that if the transfer is interrupted some images could be lost.

Images can be printed at the same time they are downloaded, or printed as needed. For truly photographic quality prints, a commercial developer is recommended, particularly if large pictures are required. (Commercial developers have access to a different process that can provide better color and resolution than that afforded by in-house processing). For in-house viewing or most general purposes, a good quality color ink-jet printer using archival inks is recommended, particularly if the photos will be stored for a long period of time. For high quality images, premium glossy photo paper will give a great degree of color accuracy, even under magnification. For general purposes plain paper, photo quality ink-jet paper, premium photo paper, etc. can be selected depending on the necessary quality outcome.

Storage Media/Memory

A digital camera uses and/or contains random access memory (RAM) to store the images. When RAM is used up, it should be restored in order to take more pictures. There are currently several types of storage media used to record digital photos. The most common ones are Smart Media, Compact Flash, and Stick Memory. Also available is another card-sized storage media, an IBM "Microdrive", which fits the Compact Flash Type II card slot and can store up to 1 gigabyte of data when used with a compatible camera. Regardless of the storage media used by the camera, pictures can be downloaded and stored either on the computer's hard drive or on a compact disk (CD) if the computer is equipped with a CD "burner".

The number of photos which can be taken per session is a function of the resolution selected and the amount of memory required. This is somewhat dependent on the file format used. Most digital cameras use a file format which "compresses" the image so that more pictures can be stored on the storage media. There are two file types used to store the digital images on the storage media. A "lossless" file is one where no data is lost. Two file format types frequently used by digital cameras to capture "lossless" images are TIFF (Tagged Image File Format) and RAW (that has not been altered, processed or manipulated in any way). Lossless files or lossless compressed files tend to be quite large. Because these images require so much memory, to store more than one or two digital images in this format requires a very high capacity (and expensive) storage media, so this is primarily used only by professional photographers using high-end equipment.

Another file type in which some data may be lost is known as a "lossy" file. Images stored this way take up less much less room but may lose some data or image quality. However, the resultant "loss" may not be significant to over-all picture quality. One type of "lossy" file format that is currently used by most digital cameras is a standard file format known as JPEG (Joint Photographic Experts Group). This file format is designed to address the known limitations of the human eye and was named for the committee that devised and wrote the standard. At the

highest JPEG resolution, even though there may be some small loss of image quality, it would not be obvious to the human eye. (This is less true for pictures of things like signs or other very hard-edged objects). When the camera saves files in the JPEG format, the amount of compression (image quality) must be decided upon. Most cameras give you the option in the setup menu to choose the JPEG image quality: fine (1:4 compression ratio), normal (1:8 compression ratio), and basic (1:16 compression ratio). The decision is always a compromise between image quality and the number of files that can be fit on a memory card. Unless many images need to be crammed onto the card, or the final quality is not that crucial, it is recommended to always use the camera setting that delivers the highest quality (lowest compression level). In most cases, a high-quality compression setting (fine) produces excellent image quality and generates compact file sizes that will allow many images to be fit onto a storage card. Generally, a 3.1 Mega Pixel (MP) camera using a 16 Mega Byte (MB) storage medium at high resolution could store approximately only two TIFF files, but could store at least 12 JPEG photos with no noticeable image loss.

Most digital cameras come with built-in picture file identifier (which assigns a unique number to each picture), date, and time stamps. This is an important feature which can be helpful for record-keeping purposes.

Power Supply

Because they are electronic, digital cameras require significantly more power than other types. As a result, batteries can drain quickly. This can be true even when batteries are left in the camera and are not in use. Repeated viewing of images through the camera's liquid crystal display (LCD) screen can also rapidly deplete batteries. This is particularly significant for digital cameras because battery depletion can cause the camera settings to be lost, in addition to being problematic if the power suddenly disappears when needed during use.

Most digital cameras use nickel metal hydride (NiMH rechargeable batteries) others use nickel cadmium (NiCd, rechargeable), lithium (non-rechargeable), and of course, alkaline (non-rechargeable). Of these, the NiMH batteries are the most economical because of their basic cost, rechargeability, length of charge, and long service life. (They are also environmentally preferable to the nickel cadmium batteries which are gradually being phased out). The lithium batteries are useful as cold-weather back-ups. Having extra battery sets is essential when using digital cameras for anything more than a few quick shots.

Optical Zoom

Another factor affecting picture quality, particularly for close-ups or distance, is optical zoom. Optical zoom is "true zoom" or telephoto, which makes the image appear closer without losing detail (a 2x optical zoom is roughly equivalent to a 35-70 mm zoom on a film camera). Digital zoom is really just built in image enlargement with some resulting loss of photo detail. Cameras with a higher degree of optical zoom allow for a greater degree of flexibility in use without loss of image quality.

Computer Requirements

If a computer is equipped with a CD "burner", the images can be stored on a read-only CD (CD-R). This has several advantages. Images stored to a CD-R are created by permanently altering the disc with a laser light beam. CD writers cannot delete laser marks, so the images can be stored without alteration and any alteration would be detectable. This is only true for CD-R, not CD-RW (read-write). The "original" images could be stored this way to form an unalterable archive and it is feasible to store large numbers of images in a small amount of space (a typical CD can store hundreds of images). Once the images are archived to a CD-R, copies of the unaltered "originals" can be made from the CD-R and any necessary enhancements, such as improving contrast or "cropping" can be done on the copies and properly noted in a Photo-Log for future reference. Each change should be saved as a separate image file and documented so that all enhancements can be reconstructed, if necessary.

An alternative to using the CD-R is to store the images on a USB Flash Drive or computer hard drive and use commercially available software to perform a "Cyclic Redundancy Check" (CRC) on the stored images. The software performs a calculation that generates a unique number which can be checked later against the stored data to ensure that they match, indicating that the data also matches.

A computer has two types of memory, hard disk storage and Random Access Memory (RAM). The computer's hard disk drive is the memory used to store the digital images before transferring them to another storage medium, such as a CD-R. A high-capacity hard drive is needed if many digital images will be downloaded at one time. A hard disk drive should not be filled to more than 70% of its maximum capacity in order to not cause performance deterioration. A computer with at least a 10 gigabyte hard drive is recommended at a minimum, but the amount of hard drive memory needed will depend on what other programs are resident which use memory, and how many pictures will be downloaded from the camera's storage media before being transferred to CD-R or other permanent storage.

Computer speed is another consideration. Speed is normally measured in millions of cycles per second or MHz. Speed affects how fast the digital images can be downloaded or edited. A speed of at least 233 MHz is recommended, although computers are now available at speeds of 2000 MHz (2Ghz).

APPENDIX I

EPA'S MEMORANDUM ON DEFICIENCY NOTICE GUIDANCE

This page intentionally left blank.

UNITED STATES ENVIRONMENTAL PROTECTION AGENCY

WASHINGTON, D.C. 20460

MEMORANDUM

OFFICE OF ENFORCEMENT

SUBJECT: "Deficiency Notice" Implementation to Improve Quality Assurance in NPDES Permittee Self-Monitoring Activities

FROM: Director, Enforcement Division (EN-338)

TO: Enforcement Division Directors, Regions I - X
Surveillance and Analysis Division Directors, Regions I - X
Director, National Enforcement Investigations Center, Denver

The Enforcement Divisions and the Surveillance and Analysis Divisions in several Regions have developed a form, called a Deficiency Notice, which their inspectors issue at the end of compliance inspections. This Deficiency Notice alerts NPDES permittees to problems in their routine self-monitoring activities. On June 11, 1979, the Office of Water Enforcement proposed that all the Regional offices adopt this form along with the Guidance for its use, and asked for your comments on this proposal. The Deficiency Notice and Guidance, which are attached, reflect your comments.

We have ordered the Deficiency Notice Forms, which will be printed on no-carbon-required paper and will be color coded in pads to correlate with the NPDES Compliance Inspection Form (EPA 3560-3). You may reproduce the attached form for use until you receive these forms.

The Deficiency Notice was designed so that State NPDES programs might easily use it. However, EPA cannot now sanction its use by the States since the Office of Management and Budget (OMB) has not authorized the form for non-Federal use. We will attempt to get OMB approval.

Since the Deficiency Notice provides a swift and simple mechanism for responding to deficiencies in self-monitoring data, I believe that its use will substantially improve the performance of wastewater treatment facilities without creating additional resource burdens or enforcement problems. If you have any questions about the Deficiency Notice or its use, please do not hesitate to call Gary Polvi of my staff at 755-0994.

J. Brian Molloy

Attachments

DEFICIENCY NOTICE GUIDANCE

Purpose

The purpose for using the Deficiency Notice is to provide a swift and simple method for improving the quality of data from NPDES self-monitoring activities. Since an inspector may issue a Deficiency Notice during any NPDES compliance inspection to alert the permittee to either existing or potential problems in self-monitoring, its receipt prompts the permittee to quickly take corrective action, as close as possible to the time the inspector perceives the problem.

Scope

The Deficiency Notice is a tool for use in conjunction with any type of EPA NPDES compliance inspection (i.e., compliance evaluation, sampling, performance audit, biomonitoring, etc.), during which the inspector identifies problems with self-monitoring that warrant response.

The Deficiency Notice and Guidance were designed so that State NPDES compliance monitoring programs could also easily use them. (Note the use of the term "regulatory authority" throughout this guidance.) However, EPA cannot yet sanction the States' use of this form because the Office of Management and Budget (OMB) has not yet approved the form for non-Federal use.

Use of the Deficiency Notice does not apply to a wide range of possible permit violations. It is to be used by the inspector to alert permittees to deficiencies in their self-monitoring activities only. The enforcement office of the regulatory authority (i.e., the EPA Regional Enforcement Division or its State counterpart), not the inspector, will continue to handle violations relative to compliance schedules or effluent limitations.

Form Description

The Deficiency Notice (see attachment) is one page long and is for use in conjunction with the standard EPA Compliance Inspection Form (EPA 3560-3 September, 1977). The reverse side of the Notice contains general instructions to inspectors for completing the form. The regulatory authority using the form may add other specific instructions that do not conflict with this guidance.

The form has four sections: (1) basic facility data, (2) deficiencies, (3) comments, and (4) inspector identification. These sections contain individual spaces where the inspector during an inspection can log deficiencies in the following self-monitoring activities: (1) monitoring location, (2) flow measurement, (3) sample collection/holding time, (4) sample preservation, (5) test procedures, (6) record keeping, (7) other self-monitoring deficiencies (i.e., sampling frequency, instrument calibration, etc.). Since the existing Compliance Inspection Form (which inspectors now complete) includes questions and answers relating to the above seven activities, inspectors should not need much additional time to complete this Deficiency Notice.

Administrative Procedures

With few exceptions (see March 7, 1977 EMS Guide), the handling and tracking of Deficiency Notices will follow the normal EPA Enforcement Management System (EMS) procedures. Inspectors can issue the Deficiency Notice to a permittee immediately following a compliance inspection if they discover any permit deficiencies which the Notice includes. Under unusual circumstances inspectors may delay issuing a Deficiency Notice until after conferring with other officials of the regulatory authority.

EMS requires the offices responsible for inspections and for NPDES enforcement to jointly establish a policy delineating the procedure for the permittee to appropriately respond to the Deficiency Notice. In the EPA Regions, the Directors of the Enforcement Division and the Surveillance and Analysis (S&A) Division will develop this policy. If the offices agree to allow the permittee to submit a separate written response rather than to include the response as part of a regular Discharge Monitoring Report (DMR) submission, they will require the inspector to record the necessary mailing instructions and deadline for response under the additional comment section of the Deficiency Notice. The inspector indicates the appropriate method for the permittee's response in the "requested action" section of the Deficiency Notice. Due to the nature of most self-monitoring problems it is reasonable for the regulatory authority to ask that the permittee submit a written description of any corrective actions within 15 work days after receiving the Notice. Where the permittee is asked to respond as part of a regular DMR submission, a similar reporting time allowance should be allotted. In either response option, the inspector should always indicate in the Deficiency Notice the requested date for permittee response.

Having the permittee document Deficiency Notice corrective actions as part of a regular DMR submission establishes accountability for the compliance inspection in the official NPDES permit compliance file even before a compliance review is undertaken. This is a resource efficient method of documenting the minimum benefit from performing inspections.

The issuance of a Deficiency Notice is not a formal enforcement action. It is not intended and must not be construed as an administrative or legal order to the permittee. Therefore, the action by the permittee to respond is voluntary, but incentive for such response comes from the positive consideration it may have on further formal enforcement follow-up of the inspection.

When the regulatory authority receives the permittee's response to the Deficiency Notice, they will review the inspection data and the permittee's response according to EMS procedures. If during routine reviews of inspection data, the authorities note deficiencies in self-monitoring data and note that the inspector did not issue a Deficiency Notice, they may issue one at any time.

The responsibility for all enforcement activity shall always remain in the enforcement/compliance review office of the regulatory authority. After agreement between the Directors of the Regional Enforcement Division and the S&A Division, these offices should incorporate details for insuring which office retains which responsibility into the Regional EMS. Whether or not a Deficiency Notice has been issued, the enforcement office of the regulatory authority can take administrative or legal action at any time. Also, a Deficiency Notice may not be appropriate in those cases where additional enforcement action is expected or litigation against the permittee is already underway.

EPA Deficiency Notice Form

DEFICIENCY NOTICE NATIONAL POLLUTANT DISCHARGE ELIMINATION SYSTEM (NPDES) *(Read instructions on back of last part before completing)*	PERMITTEE *(Facility)* NAME AND ADDRESS	
PERMITTEE REPRESENTATIVE *(Receiving this Notice)*/Title		NPDES PERMIT NO.

During the compliance inspection carried out on *(Date)* _____ the deficiencies noted below were found. Additional areas of deficiency may be brought to your attention following a complete review of the Inspection Report and other in-formation on file with the REGULATORY AUTHORITY administering your NPDES PERMIT.

D E F I C E N C I E S

MONITORING LOCATION *(Describe)*

FLOW MEASUREMENT *(Describe)*

SAMPLE COLLECTION / HOLDING TIME *(Describe)*

SAMPLE PRESERVATION *(Describe)*

TEST PROCEDURES SECTION 304(h). **40 CFR 136** *(Describe)*

RECORD KEEPING *(Describe)*

OTHER SELF-MONITORING DEFICIENCIES *(Describe)*

ADDITIONAL COMMENTS

REQUESTED ACTION—Your attention to the correction of the deficiencies noted above is requested. Receipt of a description of the corrective actions taken will be considered in the determination of the need for further Administrative or Legal Action. Your response is to be **(Inspector line out inappro-priate response method)**: (1) Include with your next *NPDES Discharge Monitoring Report (DMR) or (2) submitted as directed by the inspector.* Ques-tions regarding possible follow-up action can be answered by the REGULATORY AUTHORITY to which your DMRs are submitted and which administers your NPDES Permit.

INSPECTOR'S SIGNATURE	INSPECTOR'S ADDRESS/PHONE NO.	REGULATORY AUTHORITY/ADDRESS	DATE
INSPECTOR'S PRINTED NAME			

EPA Form 3560-4 (2-80)

APPENDIX J

NPDES COMPLIANCE INSPECTION REPORT FORM 3560-3

Revised April 2006

This page intentionally left blank.

United States Environmental Protection Agency
Washington, D.C. 20460

Water Compliance Inspection Report

Section A: National Data System Coding (i.e., PCS)

Transaction Code	NPDES	yr/mo/day	Inspection Type	Inspector	Fac Type
1 2 5	3 11	12 17	18	19	20

Remarks

21 66

Inspection Work Days	Facility Self-Monitoring Evaluation Rating	BI	QA	Reserved	
67 69	70	71	72	73 74	75 80

Section B: Facility Data

Name and Location of Facility Inspected *(For industrial users discharging to POTW, also include POTW name and NPDES permit number)*	Entry Time/Date	Permit Effective Date
	Exit Time/Date	Permit Expiration Date

Name(s) of On-Site Representative(s)/Title(s)/Phone and Fax Number(s)

Other Facility Data *(e.g., SIC NAICS, and other descriptive information)*

Name, Address of Responsible Official/Title/Phone and Fax Number

Contacted
☐ Yes ☐ No

Section C: Areas Evaluated During Inspection *(Check only those areas evaluated)*

☐ Permit	☐ Self-Monitoring Program	☐ Pretreatment	☐ MS4
☐ **Records/Reports**	☐ Compliance Schedules	☐ Pollution Prevention	
☐ Facility Site Review	☐ Laboratory	☐ Storm Water	
☐ Effluent/Receiving Waters	☐ Operations & Maintenance	☐ Combined Sewer Overflow	
☐ Flow Measurement	☐ Sludge Handling/Disposal	☐ Sanitary Sewer Overflow	

Section D: Summary of Findings/Comments

(Attach additional sheets of narrative and checklists, including Single Event Violation codes, as necessary)

SEV Codes	SEV Description
☐☐☐☐☐	_____
☐☐☐☐☐	_____
☐☐☐☐☐	_____
☐☐☐☐☐	_____

Name(s) and Signature(s) of Inspector(s)	Agency/Office/Phone and Fax Numbers	Date
Signature of Management Q A Reviewer	Agency/Office/Phone and Fax Numbers	Date

INSTRUCTIONS

Section A: National Data System Coding *(i.e., PCS)*

Column 1: Transaction Code: Use N, C, or D for New, Change, or Delete. All inspections will be *new* unless there is an error in the data entered.

Columns 3-11: NPDES Permit No. Enter the facility's NPDES permit number - third character in permit number indicates permit type for U=unpermitted, G=general permit, etc.. *(Use the Remarks columns to record the State permit number, if necessary.)*

Columns 12-17: Inspection Date. Insert the date entry was made into the facility. Use the year/month/day format (e.g., 04/10/01 = October 01, 2004).

Column 18: Inspection Type*. Use one of the codes listed below to describe the type of inspection:

A Performance Audit
B Compliance Biomonitoring
C Compliance Evaluation (non-sampling)
D Diagnostic
F Pretreatment (Follow-up)
G Pretreatment (Audit)
I Industrial User (IU) Inspection
J Complaints
M Multimedia
N Spill
O Compliance Evaluation (Oversight)
P Pretreatment Compliance Inspection
R Reconnaissance
S Compliance Sampling

U IU Inspection with Pretreatment Audit
X Toxics Inspection
Z Sludge - Biosolids
Combined Sewer Overflow-Sampling
$ Combined Sewer Overflow-Non-Sampling
+ Sanitary Sewer Overflow-Sampling
& Sanitary Sewer Overflow-Non-Sampling
\ CAFO-Sampling
= CAFO-Non-Sampling
2 IU Sampling Inspection
3 IU Non-Sampling Inspection
4 IU Toxics Inspection
5 IU Sampling Inspection with Pretreatment
6 IU Non-Sampling Inspection with Pretreatment
7 IU Toxics with Pretreatment

! Pretreatment Compliance (Oversight)
@ Follow-up (enforcement)
{ Storm Water-Construction-Sampling
} Storm Water-Construction-Non-Sampling
: Storm Water-Non-Construction-Sampling
~ Storm Water-Non-Construction-Non-Sampling
< Storm Water-MS4-Sampling
- Storm Water-MS4-Non-Sampling
> Storm Water-MS4-Audit

Column 19: Inspector Code. Use one of the codes listed below to describe the *lead agency* in the inspection.

A — State (Contractor)
B ---- EPA (Contractor)
E — Corps of Engineers
J — Joint EPA/State Inspectors—EPA Lead
L ---- Local Health Department (State)
N — NEIC Inspectors

O— Other Inspectors, Federal/EPA (Specify in Remarks columns)
P— Other Inspectors, State (Specify in Remarks columns)
R — EPA Regional Inspector
S — State Inspector
T — Joint State/EPA Inspectors—State lead

Column 20: Facility Type. Use one of the codes below to describe the facility.

1 — Municipal. Publicly Owned Treatment Works (POTWs) with 1987 Standard Industrial Code (SIC) 4952.
2 — Industrial. Other than municipal, agricultural, and Federal facilities.
3 — Agricultural. Facilities classified with 1987 SIC 0111 to 0971.
4 — Federal. Facilities identified as Federal by the EPA Regional Office.
5 — Oil & Gas. Facilities classified with 1987 SIC 1311 to 1389.

Columns 21-66: Remarks. These columns are reserved for remarks at the discretion of the Region.

Columns 67-69: Inspection Work Days. Estimate the total work effort (to the nearest 0.1 work day), up to 99.9 days, that were used to complete the inspection and submit a QA reviewed report of findings. This estimate includes the accumulative effort of all participating inspectors; any effort for laboratory analyses, testing, and remote sensing; and the billed payroll time for travel and pre and post inspection preparation. This estimate does not require detailed documentation.

Column 70: Facility Evaluation Rating. Use information gathered during the inspection (regardless of inspection type) to evaluate the quality of the facility self-monitoring program. Grade the program using a scale of 1 to 5 with a score of 5 being used for very reliable self-monitoring programs, 3 being satisfactory, and 1 being used for very unreliable programs.

Column 71: Biomonitoring Information. Enter D for static testing. Enter F for flow through testing. Enter N for no biomonitoring.

Column 72: Quality Assurance Data Inspection. Enter Q if the inspection was conducted as followup on quality assurance sample results. Enter N otherwise.

Columns 73-80: These columns are reserved for regionally defined information.

Section B: Facility Data

This section is self-explanatory except for "Other Facility Data," which may include new information not in the permit or PCS (e.g., new outfalls, names of receiving waters, new ownership, other updates to the record, SIC/NAICS Codes, Latitude/Longitude).

Section C: Areas Evaluated During Inspection

Check only those areas evaluated by marking the appropriate box. Use Section D and additional sheets as necessary. Support the findings, as necessary, in a brief narrative report. Use the headings given on the report form (e.g., Permit, Records/Reports) when discussing the areas evaluated during the inspection.

Section D: Summary of Findings/Comments

Briefly summarize the inspection findings. This summary should abstract the pertinent inspection findings, not replace the narrative report. Reference a list of attachments, such as completed checklists taken from the NPDES Compliance Inspection Manuals and pretreatment guidance documents, including effluent data when sampling has been done. Use extra sheets as necessary.

*Footnote: In addition to the inspection types listed above under column 18, a state may continue to use the following wet weather and CAFO inspection types until the state is brought into ICIS-NPDES: K: CAFO, V: SSO, Y: CSO, W: Storm Water 9: MS4. States may also use the new wet weather, CAFO and MS4 inspections types shown in column 18 of this form. The EPA regions are required to use the new wet weather, CAFO, and MS4 inspection types for inspections with an inspection date (DTIN) on or after July 1, 2005.

Attachment 3 -

Single Event Violation Table

Single Event Violation Table - Codes and Descriptions*

CODE	DESCRIPTION		CODE	DESCRIPTION
Effluent Violations			**CSO**	
A0018	Approved Bypass		A0C18	Approved Bypass
A0013	Failed Toxicity Test		A0024	Dry weather overflow
A0023	Industrial Spill		B0030	Failure to Develop Adequate LTCP
A0017	Inspection sample above historic DMR range		B0031	Failure to Implement LTCP
A0022	Narrative Effluent Violation		B0029	Failure to Implement Nine Minimum Controls (NMCs)
A0012	Numeric effluent violation		BC291	Failure to implement required NMC #1(Proper operation and maintenance)
A0016	Reported Fish Kill		BC292	Failure to implement required NMC #2 (Maximum use of the collection system)
A0011	Unapproved Bypass		BC293	Failure to implement required NMC #3 (Review pretreatment requirements)
A0015	Unauthorized Discharge of Brine		BC294	Failure to implement required NMC #4 (Maximization of flow)
Management Practice Violations			BC295	Failure to implement required NMC #5 (Elimination of dry weather flow)
B0019	Best Management Practice Deficiencies		BC296	Failure to implement required NMC #6 (Control of solids)
B0024	Biosolids/Sewage Sludge Violation (Part 503)		BC297	Failure to implement required NMC #7 (Pollution prevention programs)
B0026	Failure to Allow Entry		BC298	Failure to implement required NMC #8 (Public notification)
B0012	Failure to Conduct Inspections		BC299	Failure to implement required NMC #9 (Monitoring)
B0027	Failure to Develop Adequate SPCC Plan		B0C41	Failure to Maintain Records or Meet Record Keeping Requirements
B0017	Failure to develop any or adequate SWPPP/SWMP		C0C11	Failure to monitor
B0011	Failure to Develop/Enforce Standards		E0C16	Failure to submit required report (non-DMR)
B0028	Failure to Implement SPCC Plan		E0C13	Improper/Incorrect reporting
B0018	Failure to Implement SWPPP/SWMP		B0044	LTCP implementation schedule milestone missed
B0041	Failure to Maintain Records		A0C22	Narrative effluent violation
B0040	Improper Chemical Handling		E0C14	Noncompliance with section 308 Information Request
B0023	Improper Land Application (non-503, non-CAFO)		A0C12	Numeric effluent violation
B0020	Improper Operation and Maintenance		A0C11	Related Unapproved Bypass
B0025	Inflow/Infiltration (I/I)		A0021	Unauthorized CSO Discharge to Waters/Wet Weather
B0021	Laboratory Not Certified		A0025	Unauthorized overflow to dry land or building backup
B0022	No Licensed/Certified Operator		B0045	Violation of a milestone in a permit
B0042	Violation of a milestone in an order		B0C42	Violation of a milestone in an order
Monitoring Violations			**SSO**	
C0017	Analysis not Conducted		A0S18	Approved Bypass
C0011	Failure to Monitor for non-Toxicity Requirements		A0020	Discharge to Waters
C0021	Failure to Monitor for Toxicity Requirements		D0S11	Discharge without a valid permit (includes satellite systems)
C0015	Frequency of Sampling Violation		B0S41	Failure to Maintain Records or Meet Record Keeping Requirements
C0018	Improper Analysis or Lab Error		C0S11	Failure to monitor
C0014	Invalid/Unrepresentative Sample		E0018	Failure to report other violation
C0016	No Flow Measurement Device		E0019	Failure to report violation that may endanger public health 122.41(l)(7)
Permitting Violations			D0S12	Failure to submit required permit application info (includes satellite systems)
D0014	Application Incomplete		B0S20	Improper Operation and Maintenance
D0011	Discharge Without a Valid Permit		A0S22	Narrative effluent violation
D0012	Failure to Apply for a Permit		E0S14	Noncompliance with section 308 Information Request
D0015	Failure to Pay Fees		A0S12	Numeric effluent violation
D0016	Failure to Submit Timely Permit Renewal Application		A0026	Overflow to Dry Land or Building Backup
D0013	Unapproved Operation		A0S11	Related Unapproved Bypass
D0017	Violation Specified in Comment		BS42A	Violation of milestone in an administrative order
			BS42J	Violation of milestone in judicial decree
			B0046	Violation of sewer moratorium or restriction

Reporting Violations			**Storm Water Construction**	
E0017	Failure to Notify		D0R11	Discharge without a permit

E0012	Failure to Submit DMRs		D0R18	Failure to apply for a notice of termination
E0016	Failure to submit required report (non-DMR, non-pretreatment)		B0R12	Failure to Conduct Inspections
E0013	Improper/ Incorrect Reporting		B0C17	Failure to develop any or adequate SWPPP/SWMP
E0011	Late Submittal of DMRs		B0C18	Failure to Implement SWPPP/SWMP
E0014	Noncompliance with Section 308 Information Request		B0R41	Failure to Maintain Records
Pretreatment			C0R11	Failure to Monitor
C0012	Baseline Monitoring Report Violation		BR19A	Failure to properly install/implement BMPs
B0P12	Failure to Conduct Inspections		BR19B	Failure to properly operate and maintain BMPs
B0P11	Failure to Develop/Enforce Standards		D0R12	Failure to submit required permit application information
B0013	Failure to Enforce Against I/U		E0R16	Failure to submit required report (non-DMR)
B0015	Failure to Establish Local Limits		A0R22	Narrative effluent violation
C0013	Failure to Establish Self-Monitoring Requirements		E0R14	Noncompliance with section 308 Information Request
B0014	Failure to Issue SIU Permits		A0R12	Numeric Effluent Violation
B0016	Failure to Meet Inspection and Sampling Plan for SIUs		B0R42	Violation of a milestone in an order
E0015	Failure to submit required report (non-DMR)		**Storm Water MS4**	
B0P40	Improper Chemical Handling		D0M11	Discharge without a permit
A0014	IU Violation of Pretreatment Standards		D0M18	Failure to apply for a notice of termination
CAFO			B0M12	Failure to Conduct Inspections
B0A19	Best Management Practice Deficiencies		B0M17	Failure to develop any or adequate SWPPP/SWMP
B0038	Direct Animal Contact with Waters of US		B0M18	Failure to Implement SWPPP/SWMP
D0A11	Discharge without a permit		B0M41	Failure to Maintain Records or Meet Record Keeping
B0A12	Failure to Conduct Inspections		C0M11	Failure to Monitor
B0032	Failure to Develop any or adequate NMP		BM19A	Failure to properly install/implement BMPs
B0033	Failure to Implement NMP		BM19B	Failure to properly operate and maintain BMPs
B0A41	Failure to Maintain Records or Meet Record Keeping Requirements		D0M12	Failure to submit required permit application information
B0043	Failure to meet order final compliance date		E0M16	Failure to submit required report (non-DMR)
C0A11	Failure to Monitor		A0M22	Narrative effluent violation
D0A12	Failure to submit required permit application information		E0M14	Noncompliance with section 308 Information Request
C0019	Failure to Test Manure		A0M12	Numeric Effluent Violation
B0A40	Improper Chemical Handling		B0M42	Violation of a milestone in an order
B0A23	Improper Land Application		**Storm Water Non-Construction**	
B0039	Improper Manure Handling (not including land application)		D0N11	Discharge without a permit
B0037	Improper Mortality Management		D0N18	Failure to apply for a notice of termination
B0036	Improper O&M of Storage Facility		B0N12	Failure to Conduct Inspections
E0A13	Improper/Incorrect reporting		B0N17	Failure to develop any or adequate SWPPP/SWMP
B0034	Insufficient Buffers/Setbacks		B0N18	Failure to Implement SWPPP/SWMP
B0035	Insufficient Storage Capacity		B0N41	Failure to Maintain Records
A0A22	Narrative effluent violation		C0N11	Failure to Monitor
E0A16	No Annual Report Submitted		BN19A	Failure to properly install/implement BMPs
C0020	No Depth Marker		BN19B	Failure to properly operate and maintain BMPs
E0A14	Noncompliance with section 308 Information Request		D0N12	Failure to submit required permit application information
A0A12	Numeric effluent violation		E0N16	Failure to submit required report (non-DMR)
A0019	Production Area Runoff		A0N22	Narrative effluent violation
B0A42	Violation of a milestone in an order		E0N14	Noncompliance with section 308 Information Request
			A0N12	Numeric Effluent Violation
			B0N42	Violation of a milestone in an order

* N. B. The codes and code names listed herein may change over time. Please consult ICIS-NPDES and PCS system documentation for updated lists.

This page intentionally left blank.

APPENDIX K

SAMPLE DISCHARGE MONITORING REPORT FORM

This page intentionally left blank.

Paperwork Reduction Act Notice

Public reporting burden for this collection of information is estimated to vary from a range of 10 hours as an average per response for some minor facilities, to 110 hours as an average per response for some major facilities, with a weighted average for major and minor facilities of 18 hours per response, including time for reviewing instructions, searching existing data sources, gathering and maintaining the data needed, and completing and reviewing the collection of information. Send comments regarding the burden estimate or any other aspect of this collection of information, including strategies for reducing this burden, to Chief, Information Policy Branch, PM-223, U.S. Environmental Protection Agency, 401 M Street, SW, Washington, DC 20460; and to the Office of Information and Regulatory Affairs, Office of Management and Budget, Washington, DC 20503.

General Instructions

1. If form has been partially completed by preprinting, disregard instructions directed at entry of that information already preprinted.
2. Enter "*Permittee Name/Mailing Address* (and facility name/location, if different)," "Permit Number," and "Discharge Number" where indicated. (A separate form is required for each discharge.)
3. Enter dates beginning and ending "*Monitoring Period*" covered by form where indicated.
4. Enter each "*Parameter*" as specified in monitoring requirements of permit.
5. Enter "*Sample Measurement*" data for each parameter under "*Quantity*" and "*Quality*" in units specified in permit. "*Average*" is normally arithmetic average (geometric average for bacterial parameters) of all sample measurements for each parameter obtained during "*Monitoring Period*"; "*Maximum*" and "*Minimum*" are normally extreme high and low measurements obtained during "*Monitoring Period.*" (Note to municipals with secondary treatment requirement: Enter 30-day average of sample measurements under "*Average*," and enter maximum 7-day average of sample measurements obtained during monitoring period under "*Maximum*.")
6. Enter "*Permit Requirement*" for each parameter under "*Quantity*" and "*Quality*" as specified in permit.
7. Under "*No Ex*" enter number of sample measurements during monitoring period that exceed maximum (and/or minimum or 7-day average as appropriate) permit requirement for each parameter. If none, enter "*0*."
8. Enter "*Frequency of Analysis*" both as "*Sample Measurement*" (actual frequency of sampling and analysis used during monitoring period) and as "*Permit Requirement*" specified in permit. (e.g., Enter "*Cont*," for continuous monitoring, "*1/7*" for one day per week, "*1/30*" for one day per month, "*1/90*" for one day per quarter, etc.)
9. Enter "*Sample Type*" both as "*Sample Measurement*" (actual sample type used during monitoring period) and as "*Permit Requirement*," (e.g., Enter "*Grab*" for individual sample, "*24HC*" for 24-hour composite, "*N/A*" for continuous monitoring, etc.)
10. Where violations of permit requirements are reported, attach a brief explanation to describe cause and corrective actions taken, and reference each violation by date.
11. If "*no discharge*" occurs during monitoring period, enter "No Discharge" across form in place of data entry.
12. Enter "*Name/Title of Principal Executive Officer*" with "*Signature of Principal Officer of Authorized Agent*," "*Telephone Number*," and "*Date*" at bottom of form.
13. Mail signed Report to Office(s) by date(s) specified in permit. Retain copy for your records.
14. More detailed instructions for use of this *Discharge Monitoring Report (DMR)* form may be obtained from Office(s) specified in permit.

Legal Notice

This report is required by law (33 U.S.C. 1318; 40 C.F.R. 125.27). Failure to report or failure to report truthfully can result in civil penalties not to exceed $10,000 per day of violation; or in criminal penalties not to exceed $25,000 per day of violation, or by imprisonment for not more than one year, or by both.

EPA Form 3320-1 (Rev. 3/99)

PERMITTEE NAME/ADDRESS *(Include Facility Name/Location if Different)*

NATIONAL POLLUTANT DISCHARGE ELIMINATION SYSTEM *(NPDES)*

Form Approved
OMB No. 2040-0004

DISCHARGE MONITORING REPORT *(DMR)*

NAME
ADDRESS

PERMIT NUMBER	**DISCHARGE NUMBER**

FACILITY
LOCATION

	MONITORING PERIOD						
	YEAR	MO	DAY		YEAR	MO	DAY
FROM				**TO**			

NOTE: Read instructions before

PARAMETER		QUANTITY OR LOADING			QUALITY OR CONCENTRATION				NO. EX	FREQUENCY OF ANALYSIS	SAMPLE TYPE
		AVERAGE	MAXIMUM	UNITS	MINIMUM	AVERAGE	MAXIMUM	UNITS			
	SAMPLE										
	PERMIT REQUIREMENT										
	SAMPLE										
	PERMIT REQUIREMENT										
	SAMPLE										
	PERMIT REQUIREMENT										
	SAMPLE										
	PERMIT REQUIREMENT										
	SAMPLE										
	PERMIT REQUIREMENT										
	SAMPLE										
	PERMIT REQUIREMENT										
	SAMPLE										
	PERMIT REQUIREMENT										

NAME/TITLE PRINCIPAL EXECUTIVE OFFICER	I certify under penalty of law that this document and all attachments were prepared under my direction or supervision in accordance with a system designed to assure that qualified personnel properly gather and evaluate the information submitted. Based on my inquiry of the person or persons who manage the system, or those persons directly responsible for gathering the information, the information submitted is, to the best of my knowledge and belief, true, accurate, and complete. I am aware that there are significant penalties for submitting false information, including the possibility of fine and imprisonment for knowing violations.		TELEPHONE		DATE		
TYPED OR PRINTED		SIGNATURE OF PRINCIPAL EXECUTIVE OFFICER OR AUTHORIZED AGENT	AREA	NUMBER	YEAR	MO	DAY

COMMENT AND EXPLANATION OF ANY VIOLATIONS ***(Reference all attachments here)***

EPA Form 3320-1 (Rev. 03-99) *Previous editions may be used.*

This is a 4-part form

PAGE OF

APPENDIX L

APPROVED METHODS FOR THE ANALYSIS OF SEWAGE SLUDGE (40 *CFR* 503)

This page intentionally left blank.

APPROVED METHODS FOR THE ANALYSIS OF SEWAGE SLUDGE (40 CFR Part 503)

Parameter	Analysis Method a/
Arsenic	SW-846 Method 6010B b/ SW-846 Method 6020 b/ SW-846 Method 7060B b/ SW-846 Method 7061B b/
Cadmium	SW-846 Method 6010B b/ SW-846 Method 6020 b/ SW-846 Method 7130 b/ SW-846 Method 7131B b/
Copper	SW-846 Method 6010B b/ SW-846 Method 6020 b/ SW-846 Method 7210 b/ SW-846 Method 7211 b/
Lead	SW-846 Method 6010B b/ SW-846 Method 6020 b/ SW-846 Method 7420 b/ SW-846 Method 7421 b/
Mercury	SW-846 Method 7471B
Molybdenum	SW-846 Method 6010B b/ SW-846 Method 6020 b/ SW-846 Method 7481 b/
Nickel	SW-846 Method 7521 b/ SW-846 Method 6010B b/ SW-846 Method 6020 b/ SW-846 Method 7520 b/
Selenium	SW-846 Method 6010B b/ SW-846 Method 6020 b/ SW-846 Method 7740 b/ SW-846 Method 7741B b/
Zinc	SW-846 Method 6010B b/ SW-846 Method 6020 b/ SW-846 Method 7950 b/ SW-846 Method 7951 b/
Fecal Coliform (MPN)	SM-18th Method 9221 E (MPN) & Appendix F, EPA/625/R-92/013
Salmonella bacteria	Appendix G, EPA/625/R-92/013
Helminth Ova	Appendix I, EPA/625/R-92/013
Enteric Viruses	Appendix H, EPA/625/R-92/013
Nitrate (as N)	SM-18th Method 4500-NO_3^- SW-846 Method 9056 SW-846 Method 9210
Nitrite (as N)	SM-18th Method 4500-NO_2

Ammonia (as N)	SM-18th Method 4500-NH_3
Organic Nitrogen	Value calculated TKN minus NH3-N
Total Kjeldahl Nitrogen (TKN)	SM-18th Method 4500-N_{org}
Total Solids	SM-18th Method 2540 G
Total Volatile Solids	SM-18th Method 2540 G
Total Phosphorus	SM-18th Method 4500-P
pH	SW-846 Method 9045C
TCLP	SW-846 Method 1311
Paint Filter Test	SW-846 Method 9095A

a/ The references for the specified analytical methods are listed below:

EPA/626/R-92/013 means *Environmental Regulations and Technology, Control of Pathogens and Vector Attraction in Sewage Sludge (Including Domestic Septage) Under 40 CFR Part 503*, EPA Publication EPA/625/R-92/013, Revised October 1999. Use the indicated appendix. A copy of the document can be downloaded in PDF format from the Region 8 Biosolids Web page at http://www.epa.gov/region8/water/wastewater/biohome/biohome.html. Click on "Biosolids Documents", "New Documents", then "625r92013.pdf".

SM-18th means *Standard Methods for the Examination of Water and Wastewater*, 18th Edition, 1992, American Public Health Association, 1015 15th Street, NW., Washington, DC 20005.

SW-846 means *Test Methods for Evaluating Solid Waste, Physical/Chemical Methods*, EPA publication SW-846 Third Edition (September 1986), Update I (July 1992), Update II (September 1994), Update IIA (August 1993), Update IIB (January 1995), and Update III (December 1996). Available from the National Technical Information Service, 5285 Port Royal Road, Springfield, VA 22161.

b/ All samples must be digested using SW-846 Method 3050B (using equivalent to 1 gram dry weight) prior to analysis by any of the procedures indicated. Methods 3051 or 3052 may be used only with permission of the permit issuing authority. The AA direct Aspiration analyses are applicable at moderate concentration levels in clean complex matrix systems. AA Furnace methods can increase sensitivity if matrix effects are not severe. Inductively Coupled Plasma (ICP) methods are applicable over a broad linear range and are especially sensitive for refractory elements. Detection limits for AA Furnace methods are generally lower than for ICP methods.

APPENDIX M

EXAMPLE CHAIN-OF-CUSTODY FORM

This page intentionally left blank.

Sample Chain-of-Custody Form

U.S. ENVIRONMENTAL PROTECTION AGENCY

REGION VIII, ONE DENVER PLACE
999 18TH STREET
DENVER, CO 80202-2413

PROJECT NAME

(Signature)

CHAIN OF CUSTODY RECORD

		TIME	COMP	GRAB	STATION LOCATION			NO OF CONTAINERS							REMARKS

(Signature)

(Signature)

(Signature)

Remarks

Split Samples

Signature

Distribution Original Accompanies Shipment First Copy to Coordinator Field File Second Copy to Representative of Inspected Facility

This page intentionally left blank.

APPENDIX N

UPDATED FACT SHEET: DEPARTMENT OF TRANSPORTATION HAZARDOUS MATERIALS TRAINING

This page intentionally left blank.

DEPARTMENT OF TRANSPORTATION HAZARDOUS MATERIALS TRAINING

What are DOT training requirements?

DOT's training requirements can be found at 49 CFR Part 172, Subpart H. In general, any employee who has a responsibility working with hazardous materials (hazmat) that is placed in commerce must have hazmat training. The employee must be familiar or aware of the requirements enabling the employee to recognize and identify hazardous materials, i.e., hazardous samples vs. non-hazardous samples, consistent with the hazard communication standards. The training must be commensurate with functions and responsibilities of the employee.

Why does hazmat training apply to me?

As an inspector, you are likely to be a hazmat employee because you collect samples during an inspection and prepare the hazmat samples for transportation. The EPA is a hazmat employer because the Agency causes hazmat to be transported or shipped in commerce through its employees. DOT defines "hazmat employer" to include any department, agency, or instrumentality of the United States, a State, a political subdivision of a State, or an Indian Nation. Administrative and secretarial staff are also subject to DOT training if their responsibilities cause hazmat materials to be placed into commerce, i.e., preparing shipping papers.

Does my EPA training substitute for DOT training requirements?

The EPA Health & Safety course provides the inspector with information on protecting oneself for on-the-job hazards and would meet DOT's Safety training requirement. It does **not** meet the General awareness/familiarization requirement. See DOT's training requirements.

What type of DOT training do I need?

DOT hazmat training is function-specific. For most inspectors, the general awareness hazardous materials training course found on the DOT's website will be sufficient to meet the DOT training requirements. Alternatively, the employer can provide function specific training from other sources.(see below).

What are DOT's training requirements for hazardous materials?

DOT's hazmat training, 49 CFR §172.704, focuses on three requirements applicable to inspectors and administrative staff:

- General awareness/familiarization
  - ✓ Each hazmat employee shall be provided general awareness/familiarization training designed to provide familiarity with the hazmat requirements and to enable the employee to recognize and identify hazardous materials consistent with the hazard communication standards.

What are DOT's training

requirements for hazardous materials? cont.

- Function-specific
  - ✓ Each hazmat employee shall be provided function-specific training as it applies to the employee's job responsibilities.
- Safety
  - ✓ Emergency response information required by part 172, subpart G, i.e., information that can be used in the mitigation of an incident involving hazardous materials;
  - ✓ Measures to protect the employee from the hazards associated with hazardous materials to which they may be exposed in the work place, including specific measures the hazmat employer has implemented to protect employees from exposure; and
  - ✓ Methods and procedures for avoiding accidents, such as the proper procedures for handling packages containing hazardous materials.

Where can I find training opportunities?

A good training resource is DOT's hazmat page, hazmat.dot.gov/training. You can download the instructor's and student's training manual for in-house use. The training manual does include test questions. Self-training is acceptable by DOT so long as 49 CFR §172.704 training requirements are met. The DOT's Transportation Safety Institute in Oklahoma City, OK offers training on-site. Course dates are available from the website.

In addition to DOT's hazmat site, this web link, hazmat.dot.gov/thirdpty.htm identifies third party providers who offer a variety of hazmat training courses.

How long does the certification last?

The hazardous materials training is required to be completed within the first 90 days of employment. The certification period is good for three years and then the hazardous materials training program must be retaken. If your job responsibilities change, your training needs may change.

Who is responsible for training?

The employer is responsible. DOT's definition of employer is not clear in terms of EPA's administrative structure. "Employer" could be defined as the Administrator or any other manager in direct supervisory line of the employee.

Who is responsible for keeping the training record?

The employer is responsible for keeping the employee's records.

What should be in the training record?

completed the necessary training, and has been tested and certified.

Specifically, what documents need to be retained?

A record of current training, inclusive of the preceding three years must be retained for as long as the employee is employed by that employer as a hazmat employee and for 90 days thereafter. The record shall include the following information:

(1) The inspector's name;
(2) The most recent training completion date of the inspector's training;
(3) A description, copy, or the location of the training materials used to meet the requirements;
(4) The name and address of the person providing the training; and
(5) Certification that the hazmat employee has been **trained and tested**.

Does the employee have to "pass" the test?

The requirements do not state that the employee must "pass" a test; however, an employee may only be certified in areas in which he/she can successfully perform their hazmat duties.

Know Your Shipper's Requirements!

Before collecting samples, know which shipping company you will be using to ship your samples. Some require additional training and certification beyond the basic DOT requirements. Here are three common carriers with some of their requirements for shipping hazmat materials.

Federal Express (FedEx)

The shipping method you select determines what type of training FedEx expects you to have completed. If you plan to ship samples by ground, the DOT training requirements are sufficient. If you plan to ship the samples by air, then you must be trained according to International Air Transport Association (IATA) regulations. Successful completion of the IATA requirements will meet DOT's hazard communications requirements. IATA training and information can be found at: www.iata.org.

Documentation that shows the employee has

Know Your Shipper's Requirements! cont.

awareness training is acceptable by UPS for ground shipments. Shipments by air require IATA training.

United States Postal Service (USPS)

DOT's general awareness training and testing is acceptable by USPS for both shipping by ground and air. However, the Postal Service does have limits which are more stringent than DOT's regulations. Check this website for further details - http://pe.usps.gov/text/dmm/c023.htm

Before shipping, you should inquire with the shipping company if they have additional requirements for handling, packaging and shipment limitations for the hazmat materials.

Here are a few issues an inspector may face with the different shippers:

- Do you want them to meet you at the site? You may need to call ahead to schedule the pickup before you arrive at the site to collect samples.
- Do you plan on dropping the shipment off? Not all offices can accept dangerous goods and hazmat.
- Shipping papers may need to be typed, not handwritten. Do you bring a portable typewriter with you or type the shipping papers before leaving the office?

United Parcel Service (UPS)

DOT's general

APPENDIX O

SUPPLEMENTAL FLOW MEASUREMENT INFORMATION

This page intentionally left blank.

SUPPLEMENTAL FLOW MEASUREMENT INFORMATION

Basic Hydraulic Calculations

The relationship between the flow rate (Q), the average velocity (V), and the cross-sectional area of the flow (A) is given by the following equation:

$$Q = VA$$

where Q = flow in cubic feet per second
V = velocity in feet per second
A = area in square feet.

To convert flow in cubic feet of water per second to flow in gallons of water per minute, the following proportionality is used:

$$\frac{\text{cubic feet}}{\text{second}} \times \frac{7.48 \text{ gallons water}}{\text{cubic foot of water}} \times \frac{60 \text{ seconds}}{\text{minute}} = \frac{\text{gallons}}{\text{minute}}$$

To convert from cubic feet per second to million gallons per day, multiply the number of cubic feet per second by 0.6463.

The cross-sectional area (A) of a pipe is described by:

$$A = \tfrac{1}{4}\pi d^2$$

where d = diameter of the pipe in feet.

Flow Measurement Devices

Flow data may be collected instantaneously or continuously. Instantaneous flows must be measured when samples are taken so that the pollutant concentrations can be correlated to flow data. In a continuous flow measurement system, flow measurements are summed to obtain a value for the total flow to verify NPDES permit compliance.

A typical continuous flow measurement system consists of a flow device, a flow sensor, transmitting equipment, a recorder, and a totalizer.

Instantaneous flow data can be obtained without using such a system. The primary flow device is constructed to yield predictable hydraulic responses related to the rate of wastewater or water flowing through the device. As previously mentioned, examples of such devices include weirs and flumes, which relate water depth (head) to flow; Venturi meters, which relate differential pressure to flow; and electromagnetic flowmeters, which relate induced electric voltage to flow.

In most cases, a standard primary flow device has undergone detailed testing and experimentation and its accuracy has been verified.

Flow is measured by many methods; some are designed to measure open channel flows, and others are designed to measure flows in pipelines. A complete discussion of all available flow measurement methods, their supporting theories, and the devices used are beyond the scope of this manual. The most commonly used flow measurement devices and procedures for inspecting them will be described briefly in the following paragraphs. For more detail, inspectors should consult the publications listed in "References" at the end of this chapter.

Primary Devices

Weirs. A weir consists of a thin vertical plate with a sharp crest that is placed in a stream, channel, or partly filled pipe. Figure I-1 shows a profile of a sharp-crested weir and indicates the appropriate nomenclature. Four common types of sharp-crested weirs are shown in Figure I-2. This figure illustrates the difference between suppressed and contracted rectangular weirs and illustrates Cipolletti (trapezoidal) and V-notch (triangular) weirs.

To determine the flow rate, it is necessary to measure the hydraulic head (height) of water above the crest of the weir. For accurate flow measurements, the crest must be clean, sharp, and level. The edge of the crest must not be thicker than 1/8 inch.

The rate of flow over a weir is directly related to the height of the water (head) above the crest at a point upstream of the weir where the water surface is level. To calculate the discharge over a weir, the head must first be measured by placing a measuring device upstream of the weir, at a distance of at least 4 times an approximate measurement of the head. A measurement can be taken at the weir plate to approximate the head. However, if this measurement is used to calculate the discharge, this value will provide only a rough estimate of the discharge.

The head-discharge relationship formulas for nonsubmerged contracted and suppressed rectangular weirs, Cipolletti weirs, and V-notch weirs are provided in Table I-1. Discharge rates for the 90-degree V-notch weir (when the head is measured at the weir plate) are included in Table I-2. Flow rates for 60- and 90-degree V-notch weirs can be determined from the graph in Figure I-3. Minimum and maximum recommended flow rates for Cipolletti weirs are provided in Table I-3. Figure I-4 is a nomograph for flow rates for rectangular weirs using the Francis formulas.

Parshall Flume. The Parshall flume is composed of three sections: a converging upstream section, a throat or contracted section, and a diverging or dropping downstream section. When there is free fall out of the throat of a Parshall flume, no diverging downstream section is required. It operates on the principle that when open channel water flows through a constriction in the channel, it produces a hydraulic head at a certain point upstream of the constriction that is proportional to the flow. The hydraulic head is used to calculate the flow. Flow curves are shown in Figure I-5 to determine free flow through 3 inches to 50 feet Parshall flumes.

The Parshall flume is good for measuring open channel waste flow because it is self cleaning; therefore, sand or suspended solids are unlikely to affect the operation of the device. The flume is both simple and accurate.

The flume size is given by the width of the throat section. Parshall flumes have been developed with throat widths from 1 inch to 50 feet. The configuration and standard nomenclature for Parshall flumes are provided in Figure I-6. Strict adherence to all dimensions is necessary to achieve accurate flow measurements. Figure I-6 provides Parshall flume dimensions for various throat widths, and Table I-4 provides the minimum and maximum flow rates for free flow through Parshall flumes.

For free nonsubmerged flow in a Parshall flume of throat and upstream head (Ha in feet), the discharge relationship for flumes of 8 feet or less is given by the general equation Q = CWHan, where Q = flow.

Table I-5 provides the values of C, n, and Q for different sizes (widths) of the Parshall flumes. Nomographs, curves, or tables are readily available to determine the discharge from head observations.

Flow through a Parshall flume may also be submerged. The degree of submergence is indicated by the ratio of the downstream head to the upstream head (Hb/Ha), which is the submergence ratio. Hb is the height of water measured above the crest. The flow is submerged if the submerged ratio is:

- Greater than 0.5 for flumes under 3 inches
- Greater than 0.6 for flumes 6 to 9 inches
- Greater than 0.7 for flumes 1 to 8 feet
- Greater than 0.8 for flumes larger than 8 feet.

If submerged conditions exist, the inspector should apply a correction factor to the free flow determined using the relationship Q= CWHn. These correction factors are shown in Figure I-7 for different sizes of the Parshall flume.

Palmer-Bowlus Flume. The Palmer-Bowlus flume is also composed of three sections: a converging upstream section, a contracted section or throat, and a diverging downstream section (Figure I-8). The upstream depth of the water (head) above the raised step in the throat is related to the discharge rate. The head should be measured at a distance d/2 upstream of the throat where d is the size (width) of the flume. The height of the step is usually unknown until the manufacturer's data are consulted, it is difficult to manually measure the height of water above the step at an upstream point. The dimensions for Palmer-Bowlus flumes are not standardized as they are for Parshall flumes. Therefore, no standard flow equation exists. Instead, rating curves are provided by manufacturers of Palmer-Bowlus flumes to relate the head to the discharge rate.

The flume must be installed with a minimum channel slope downstream to maintain critical flow through the flume and prevent the flume from becoming submerged. A small jump or rise in the water surface below the throat indicates that critical flow through the flume has probably occurred and submerged conditions do not exist. Accurate flow measurements can usually be obtained with upstream depths that are up to 95 percent of the pipe diameter. Table I-6 provides a table of the maximum slopes recommended for installation of Palmer-Bowlus flumes. Advantages of this type of flow measurement device are the following:

- It is easily installed in existing systems.
- Head loss is insignificant.
- Unit is self cleaning.

Venturi Meter. The Venturi (differential pressure) meter is one of the most accurate primary devices for measuring flow rates in pipes. The Venturi meter is basically a pipe segment consisting of an inlet section, a converging section, and a throat, along with a diverging outlet section as illustrated in Figure I-9. The water velocity is increased in the constricted portion of the inlet section resulting in a decrease in the static pressure. The pressure difference between the inlet pipe and the throat is proportional to the square of the flow. The pressure difference can easily be measured very accurately, resulting in an accurate flow measurement. An advantage of the Venturi meter is that it causes little pressure (head) loss. The formula for calculating the flow in a Venturi meter is as follows:

$$Q = cKd_2^2\sqrt{h_1 - h_2} \qquad \text{(King1963)}$$

where Q = volume of water, in cubic feet per second
c = discharge coefficient, obtain from Table I-7. C varies with Reynold's number, meter surfaces, and installation

h1 = pressure head at center of pipe at inlet section, in feet of water
h2 = pressure head at throat, in feet of water
K = constant which relates d2 to d1 for Venturi meters. Obtain values of K from Table I-8 or calculate according to the formula

$$K = \sqrt[4]{\frac{2g}{1 - \left[\frac{d_2}{d_1}\right]^4}}$$

where d_2 = throat diameter, in feet
d_1 = diameter of inlet pipe, in feet

Electromagnetic Flowmeter. The electromagnetic flowmeter operates according to Faraday's Law of Induction: the voltage induced by a conductor moving at right angles through a magnetic field will be proportional to the velocity of the conductor through the field. In the electromagnetic flowmeter, the conductor is the liquid stream to be measured and the field is produced by a set of electromagnetic coils. A typical electromagnetic flowmeter is shown in Figure I-10. The induced voltage is transmitted to a converter for signal conditioning. The meter may be provided with recorder and totalizer using electric or pneumatic transmission systems. This type of flowmeter is useful at sewage lift stations and for measuring total raw wastewater flow or raw or recirculated sludge flow.

Electromagnetic flowmeters are used in full pipes and have many advantages, including: accuracies of +1 percent, a wide flow measurement range, a negligible pressure loss, no moving parts, and rapid response time. However, they are expensive and buildup of grease deposits or pitting by abrasive wastewaters can cause error. Regular checking and cleaning of the electrodes is necessary. The meter electronics can be checked for proper operation with devices specially made for this purpose. The meter should be checked at least annually. The calibration of an electromagnetic flowmeter cannot be verified except by returning it to the

factory or by the dye dilution method.

Propeller Meter. The propeller meter (Figure I-11) operates on the principle that liquid hitting the propeller will cause the propeller to rotate at a speed proportional to the flow rate. The meter is self-contained and requires no energy or equipment other than a mechanical totalizer to obtain a cumulative flow reading. Equipment may be added to the meter to produce a flow reading, to pace chemical feed equipment, and to control telemetering equipment for remote readout. The calibration of a propeller meter can be checked by returning it to the factory, by comparing its readings to another meter measuring the same flow, or by using the dye dilution method.

Secondary Devices

Secondary devices are the devices in the flow measurement system that translate the interaction of primary devices in contact with the fluid into the desired records or readout. They can be organized into two broad classes:

- Nonrecording type with direct readout (e.g., a staff gauge) or indirect readout from fixed points (e.g., a chain, wire weight, float)

- Recording type with either digital or graphic recorders (e.g., float in well, float in flow, bubbler, electrical, acoustic).

The advantages and disadvantages of various secondary devices are provided in Table G-9.

Transit-Time Flowmeter. The transit-time flowmeter (Figure I-12) is a new ultrasonic technology that can be used as a secondary device. As a secondary device, the transit-time flowmeter must be used in conjunction with one of the primary devices described above. The transit-time flowmeter utilizes a minimum of one pair of transducers that alternately transmit and receive an ultrasonic signal. The transducers are placed on or in the pipe at a defined spacing based on a predetermined angle. The signal between the pair of transducers is alternately transmitted, first upstream and then downstream. At a zero flow condition, the time for the two signals to be transmitted and received are equal. However, as flow begins, the liquid's flow velocity speeds up the signal in the up to downstream direction while slowing the signal in the down to upstream direction. The difference in time between the two signals is proportional to the liquid's velocity. Knowing the liquid's flow velocity and the pipe inner diameter area provides the instantaneous flow rate. The flowmeter provides analog and discrete outputs for remote recorder and totalization of flow.

Transit-time flowmeters are suitable for the typical range of liquids found in full pipe applications. The clamp-on nature of the meter allows for its installation without the need to shut down the existing line. Transit-time flowmeters are available in both permanent and portable configurations.

Pumps

Some wastewater facilities may need to measure flow by means of pumps in which discharge-versus-power relationships have been determined from measurements of the average output or input during a period in which discharge measurements were made. Suitable curves may be developed from these test data. When readily available from the manufacturer, pump curves may be used by the inspector to estimate flow.

Because of wear on pumps and uncertainty regarding actual discharge heads, pump curves at best only provide an estimate of the flow. Pump curves are not normally accurate enough to be used for NPDES permit discharge flow measurements. Pump curves have been used for determining large flows, such as the cooling water discharge from large steam electric power plants, where a high degree of accuracy was not necessary.

Table O-1

Head-Discharge Relationship Formulas for Nonsubmerged Weirs*

Weir Type	Contracted	Suppressed	Remarks	Reference
Rectangular				
Francis formulas	$Q = 3.33\ (L - 0.1\ nH)H^{1.5}$	$Q = 3.33\ L\ H^{1.5}$	Approach velocity neglected	King 1963
	$Q = 3.33\ [(H + h)^{1.5}-h^{1.5}](L - 0.1nH)$	$Q = 3.33\ L[(H + h)^{1.5} - h^{1.5}]$	Approach velocity considered	King 1963
Cipolletti	$Q = 3.367\ L\ H^{1.5}$	NA	Approach velocity neglected	King 1963
	$Q = 3.367\ L\ (H + h)^{1.5} - h^{1.5}$	NA	Approach velocity considered	EPA 1973
V-notch				
Formula for 90° V-notch only	$Q = 2.50\ H^{2.5}$	NA	Not appreciably affected by approach velocity	King 1963
	$Q = 3.01\ H_W 2.48$	NA	Head measured at weir plate	Eli and Peterson 1979 (EPA-61809A-2B)

Q = discharge in cubic feet
H = head in feet
NA = not applicable
H_W = head in feet at weir plate
n = number of end contractions
L = crest length in feet
h = head in feet due to the approach velocity = $v^2/2g$
V = approach velocity
g = gravity (32.2 ft/sec^2)

*Selection of a formula depends on its suitability and parameters under consideration.

Table O-2

Discharge of 90° V-Notch Weir—Head Measured at Weir Plate

Head@ Weir in Feet	Flow Rate in CFS	Head@ Weir in Feet	Flow Rate in CFS	Head@ Weir in Feet	Flow Rate in CFS
0.06	0.003	0.46	0.439	0.86	2.071
0.07	0.004	0.47	0.463	0.87	2.140
0.08	0.006	0.48	0.488	0.88	2.192
0.09	0.008	0.49	0.513	0.89	2.255
0.10	0.010	0.50	0.540	0.90	2.318
0.11	0.013	0.51	0.567	0.91	2.382
0.12	0.016	0.52	0.595	0.92	2.448
0.13	0.019	0.53	0.623	0.93	2.514
0.14	0.023	0.54	0.653	0.94	2.582
0.15	0.027	0.55	0.683	0.95	2.650
0.16	0.032	0.56	0.715	0.96	2.720
0.17	0.037	0.57	0.747	0.97	2.791
0.18	0.043	0.58	0.780	0.98	2.863
0.19	0.049	0.59	0.813	0.99	2.936
0.20	0.056	0.60	0.848	1.00	3.010
0.21	0.063	0.61	0.883	1.01	3.085
0.22	0.070	0.62	0.920	1.02	3.162
0.23	0.079	0.63	0.957	1.03	3.239
0.24	0.087	0.64	0.995	1.04	3.317
0.25	0.097	0.65	1.034	1.05	3.397
0.26	0.107	0.66	1.074	1.06	3.478
0.27	0.117	0.67	1.115	1.07	3.556
0.28	0.128	0.68	1.157	1.08	3.643
0.29	0.140	0.69	1.199	1.09	3.727
0.30	0.152	0.70	1.243	1.10	3.813
0.31	0.165	0.71	1.287	1.11	3.889
0.32	0.178	0.72	1.333	1.12	3.987
0.33	0.193	0.73	1.379	1.13	4.076
0.34	0.207	0.74	1.426	1.14	4.166
0.35	0.223	0.75	1.475	1.15	4.257
0.36	0.239	0.76	1.524	1.16	4.349
0.37	0.256	0.77	1.574	1.17	4.443
0.38	0.273	0.78	1.625	1.18	4.538
0.39	0.291	0.79	1.678	1.19	4.634
0.40	0.310	0.80	1.730	1.20	4.731
0.41	0.330	0.81	1.785	1.21	4.829
0.42	0.350	0.82	1.840	1.22	4.929
0.43	0.371	0.83	1.896	1.23	5.030
0.44	0.393	0.84	1.953	1.24	5.132
0.45	0.415	0.85	2.012	1.25	5.235

Equation $Q = 3.01\ Hw^{2.48}$, where Hw, head, is in feet at the weir and Q is in cubic feet per second.

Table O-3

Minimum and Maximum Recommended Flow Rates for Cipolletti Weirs

Crest Length, ft.	Minimum Head, ft.	Minimum Flow Rate		Maximum Head, ft.	Maximum Flow Rate	
		MGD	CFS		MGD	CFS
1	0.2	0.195	0.301	0.5	0.769	1.19
1.5	0.2	0.292	0.452	0.75	2.12	3.28
2	0.2	0.389	0.602	1.0	4.35	6.73
2.5	0.2	0.487	0.753	1.25	7.60	11.8
3	0.2	0.584	0.903	1.5	12.0	18.6
4	0.2	0.778	1.20	2.0	24.6	38.1
5	0.2	0.973	1.51	2.5	43.0	66.5
6	0.2	0.17	1.81	3.0	67.8	105.0
8	0.2	0.56	2.41	4.0	139.0	214.0
10	0.2	1.95	3.01	5.0	243.0	375.0

Table O-4

Minimum and Maximum Recommended Flow Rates for Free Flow Through Parshall Flumes

Throat Width, W	Minimum Head, ft.	Minimum Flow Rate		Maximum Head, ft.	Maximum Flow Rate	
		MGD	CFS		MGD	CFS
1 in.	0.07	0.003	0.005	0.60	0.099	0.153
2 in.	0.07	0.007	0.011	0.60	0.198	0.306
3 in.	0.10	0.018	0.028	1.5	1.20	1.86
6 in.	0.10	0.035	0.054	1.5	2.53	3.91
9 in.	0.10	0.05	0.091	2.0	5.73	8.87
1 ft.	0.10	0.078	0.120	2.5	10.4	16.1
1.5 ft.	0.10	0.112	0.174	2.5	15.9	24.6
2 ft.	0.15	0.273	0.423	2.5	21.4	33.1
3 ft.	0.15	0.397	0.615	2.5	32.6	50.4
4 ft.	0.20	0.816	1.26	2.5	43.9	67.9
5 ft.	0.20	1.00	1.55	2.5	55.3	85.6
6 ft.	0.25	1.70	2.63	2.5	66.9	103
8 ft.	0.25	2.23	3.45	2.5	90.1	139
10 ft.	0.30	3.71	5.74	3.5	189	292
12 ft.	0.33	5.13	7.93	4.5	335	519

Table O-5

Free-Flow Values of C and N for Parshall Flumes

Based on the Relationship $Q = CWH^n$
(American Petroleum Institute 1969)

Flume Throat, W		C	n	Max. Q CFS
1	in.	0.338	1.55	0.15
2	in.	0.676	1.55	0.30
3	in.	0.992	1.55	1.8
6	in.	2.06	1.58	3.9
9	in.	3.07	1.53	8.9
1	ft.	4W*	$1.522W^{0.026}$	16.1
1.5	ft.	4W*	$1.522W^{0.026}$	24.6
2	ft.	4W*	$1.522W^{0.026}$	33.1
3	ft.	4W*	$1.522W^{0.026}$	50.4
4	ft.	4W*	$1.522W^{0.026}$	67.9
5	ft.	4W*	$1.522W^{0.026}$	85.6
6	ft.	4W*	$1.522W^{0.026}$	103.5
7	ft.	4W*	$1.522W^{0.026}$	121.4
8	ft.	4W*	$1.522W^{0.026}$	139.5

Where W = Flume throat width

Q = Flow (CFS)

C = Constant

n = Constant

H = Head upstream of the flume throat (feet)

* = W should be represented in feet to calculate C

Table O-6

Minimum and Maximum Recommended Flow Rates for Free Flow Through Plasti-Fab Palmer-Bowlus Flumes

D Flume Size (in.)	Maximum Slope for Upstream (%)	Minimum Head (ft.)	Minimum Flow Rate		Maximum Head (ft.)	Maximum Flow Rate	
			MGD	CFS		MGD	CFS
6	2.2	0.11	0.023	0.035	0.36	0.203	0.315
8	2.0	0.15	0.048	0.074	0.49	0.433	0.670
10	1.8	0.18	0.079	0.122	0.61	0.752	1.16
12	1.6	0.22	0.128	0.198	0.73	1.18	1.83
15	1.5	0.27	0.216	0.334	0.91	2.06	3.18
18	1.4	0.33	0.355	0.549	1.09	3.24	5.01
21	1.4	0.38	0.504	0.780	1.28	4.81	7.44
24	1.3	0.44	0.721	1.12	1.46	6.70	10.4
27	1.3	0.49	0.945	1.46	1.64	8.95	13.8
30	1.3	0.55	1.26	1.95	1.82	11.6	18.0

Table O-7

Coefficients of Discharge c for Venturi Meters (King 1963)

Diameter of Throat, in.	Throat Velocity, ft. per sec.								
	3	4	5	10	15	20	30	40	50
1	0.935	0.945	0.949	0.958	0.963	0.966	0.969	0.970	0.972
2	0.939	0.948	0.953	0.965	0.970	0.973	0.974	0.975	0.977
4	0.943	0.952	0.957	0.970	0.975	0.977	0.978	0.979	0.980
8	0.948	0.957	0.962	0.974	0.978	0.980	0.981	0.982	0.983
12	0.955	0.962	0.967	0.978	0.981	0.982	0.983	0.984	0.985
18	0.963	0.969	0.973	0.981	0.983	0.984	0.985	0.986	0.986
48	0.970	0.977	0.980	0.984	0.985	0.986	0.987	0.988	0.988

Table O-8

Values of K in Formula for Venturi Meters
(King 1963)

$\frac{d^2}{d^1}$	K	$\frac{d^2}{d^1}$	K	$\frac{d^2}{d^1}$	K	$\frac{d^2}{d^1}$	K	$\frac{d^2}{d^1}$	K
0.20	6.31	0.33	6.34	0.46	6.45	0.59	6.72	0.72	7.37
0.21	6.31	0.34	6.34	0.47	6.46	0.60	6.75	0.73	7.45
0.22	6.31	0.35	6.35	0.48	6.47	0.61	6.79	0.74	7.53
0.23	6.31	0.36	6.35	0.49	6.49	0.62	6.82	0.75	7.62
0.24	6.31	0.37	6.36	0.50	6.51	0.63	6.86	0.76	7.72
0.25	6.31	0.38	6.37	0.51	6.52	0.64	6.91	0.77	7.82
0.26	6.31	0.39	6.37	0.52	6.54	0.65	6.95	0.78	7.94
0.27	6.32	0.40	6.38	0.53	6.54	0.66	7.00	0.79	8.06
0.28	6.32	0.41	6.39	0.54	6.59	0.67	7.05	0.80	8.20
0.29	6.32	0.42	6.40	0.55	6.61	0.68	7.11	0.81	8.35
0.30	6.33	0.43	6.41	0.56	6.64	0.69	7.17	0.82	8.51
0.31	6.33	0.44	6.42	0.57	6.66	0.70	7.23	0.83	8.69
0.32	6.33	0.45	6.43	0.58	6.69	0.71	7.30	0.84	8.89

Table O-9

Advantages and Disadvantages of Secondary Devices

Device	Advantages	Disadvantages
Hook Gauge	Common	Requires training to use, easily damaged
Stage Board	Common	Needs regular cleaning, difficult to read top of meniscus
Pressure Measurement		
a. Pressure Bulb	Since no compressed air is used, source can be linked directly to sampler	Openings can clog, expensive
b. Bubbler Tube	Self-cleaning, less expensive, reliable	Needs compressed air or other air source
Float	Inexpensive, reliable	Catches debris, requires frequent cleaning to prevent sticking and changing buoyancy, and corroding hinges
Dipper	Quite reliable, easy to operate	Oil and grease foul probe, causing possible sensor loss
Ultrasonic	No electrical or mechanical contact	Errors from heavy turbulence and foam, calibration procedure is more involved than for other devices

Figure I-1

Profile and Nomenclature of Sharp-Crested Weirs
(Associated Water and Air Resource Engineers, Inc., 1973)

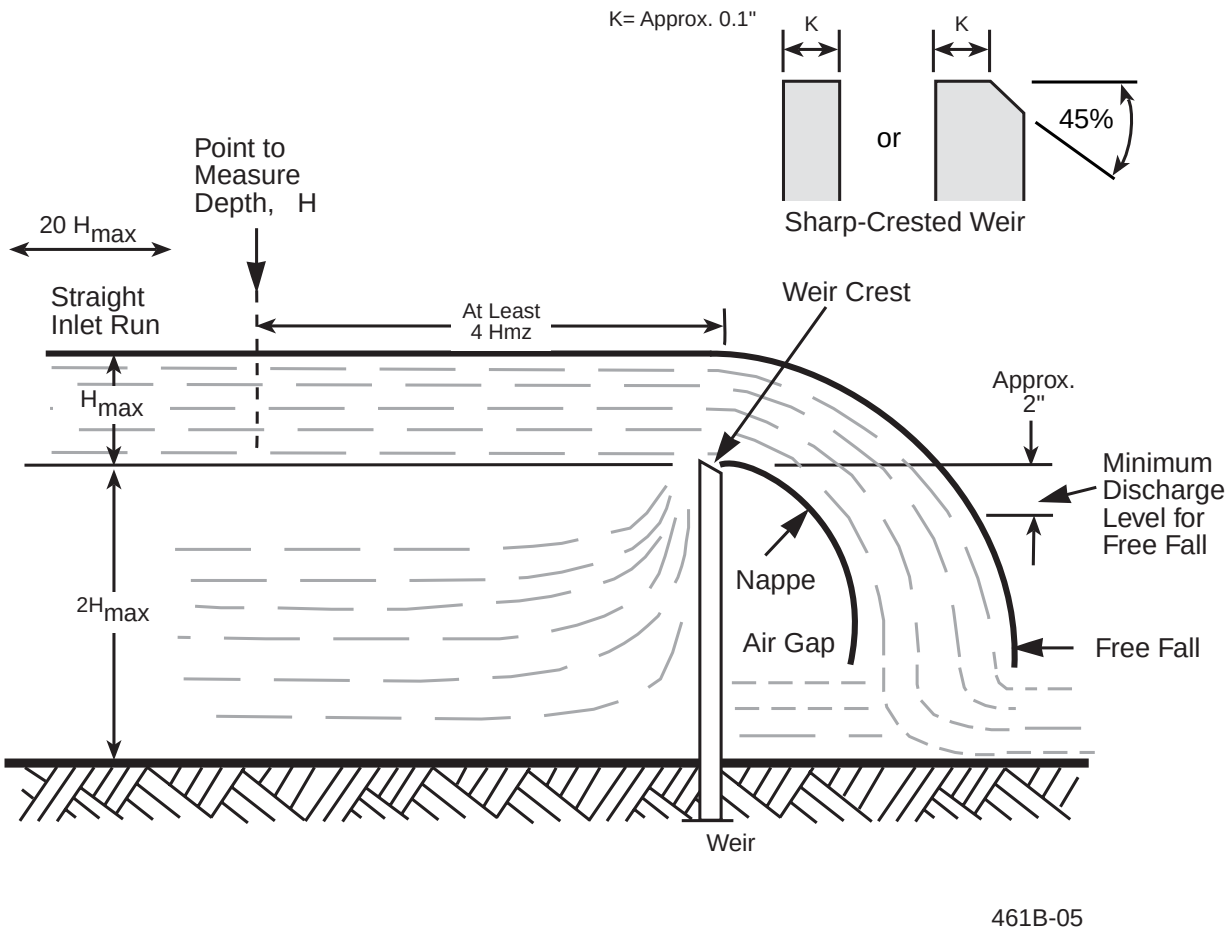

Figure I-2

Three Common Types of Sharp-Crested Weirs
(Associated Water and Air Resource Engineers, Inc., 1973)

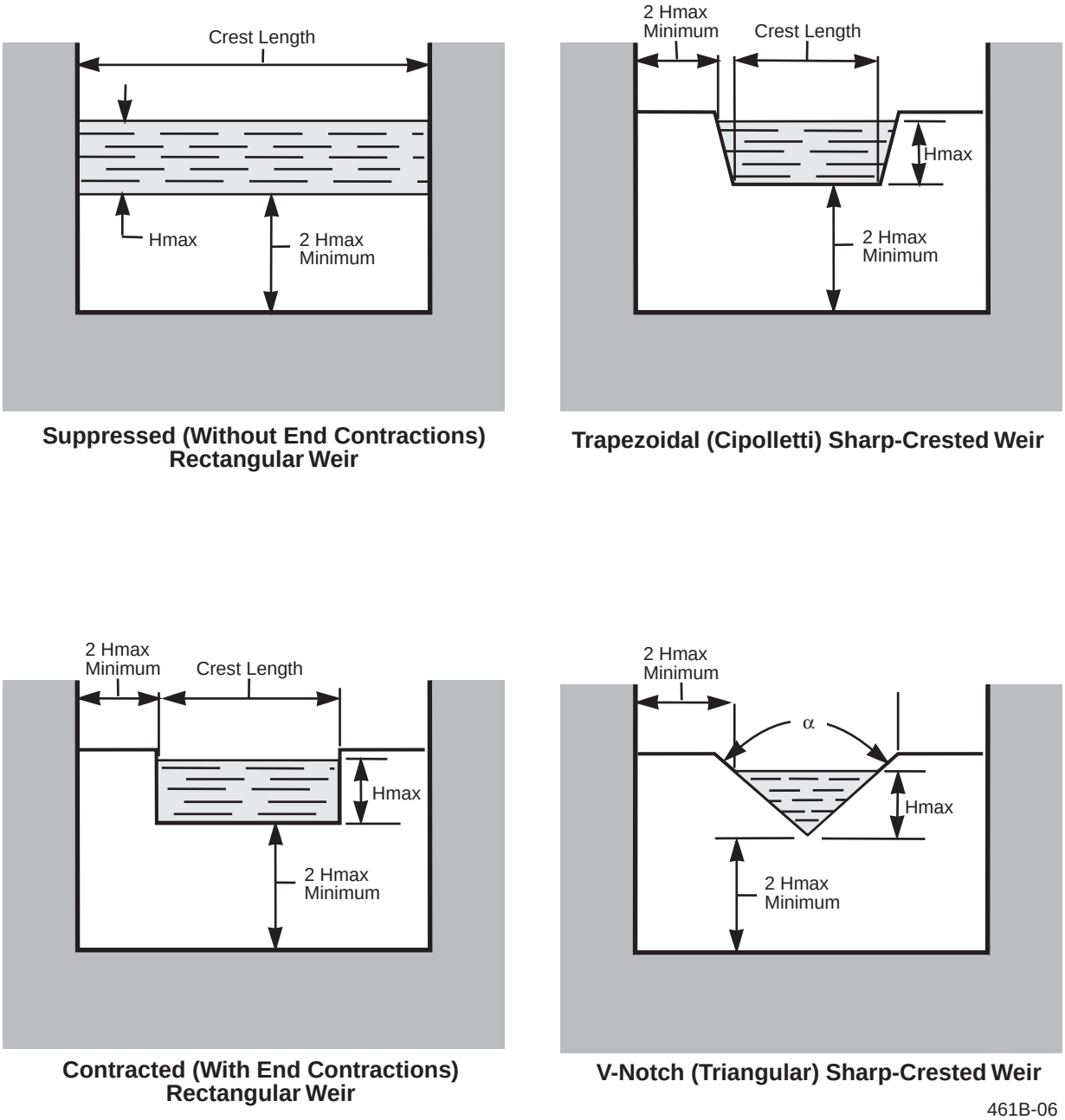

Figure I-3

Flow Rates for 60° and 90° V-Notch Weirs
(Associated Water and Resource Engineers, Inc., 1973)

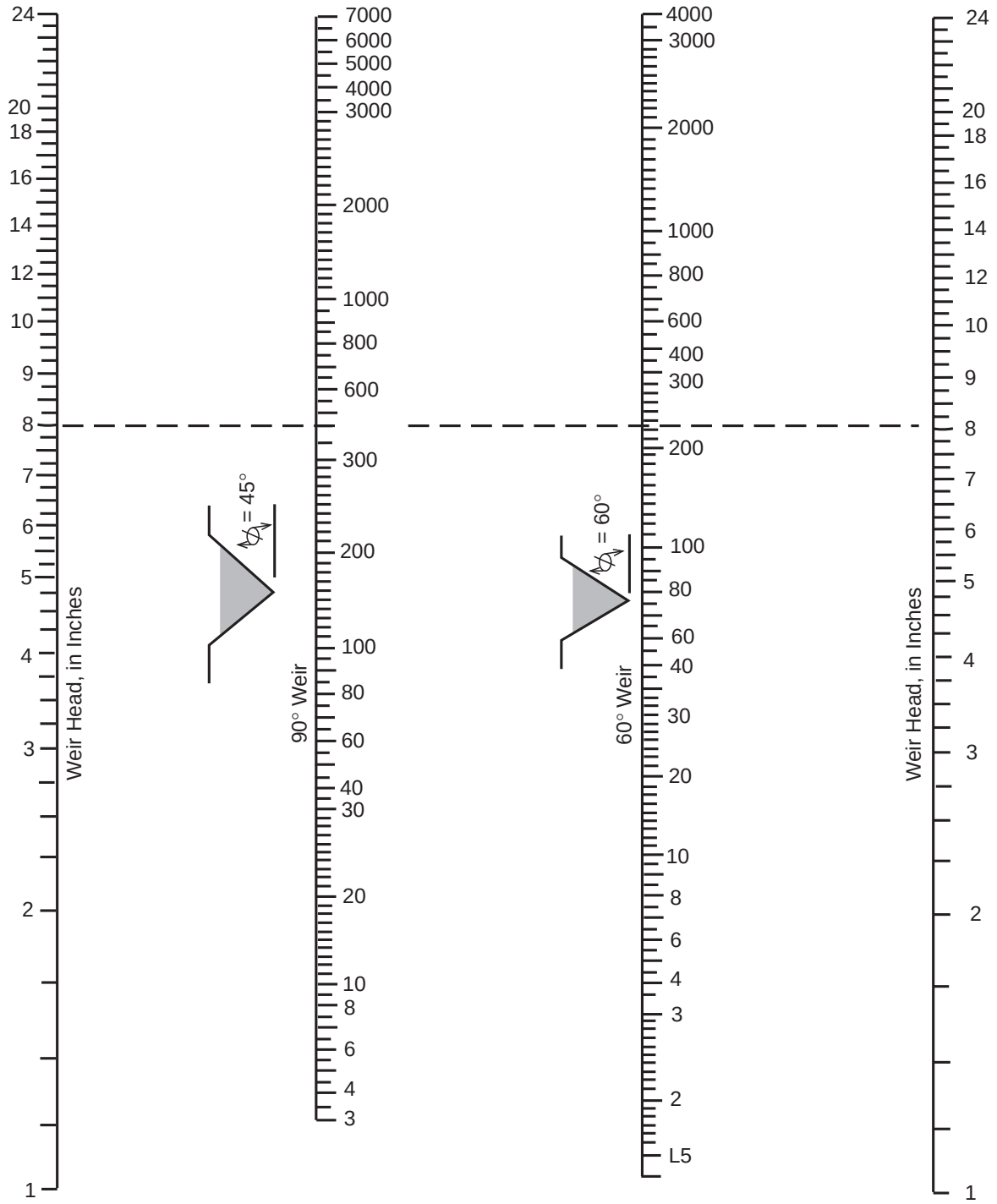

461B-08

Figure I-4

Nomograph for Capacity of Rectangular Weirs
(Associated Water and Air Resource Engineers, Inc., 1973)

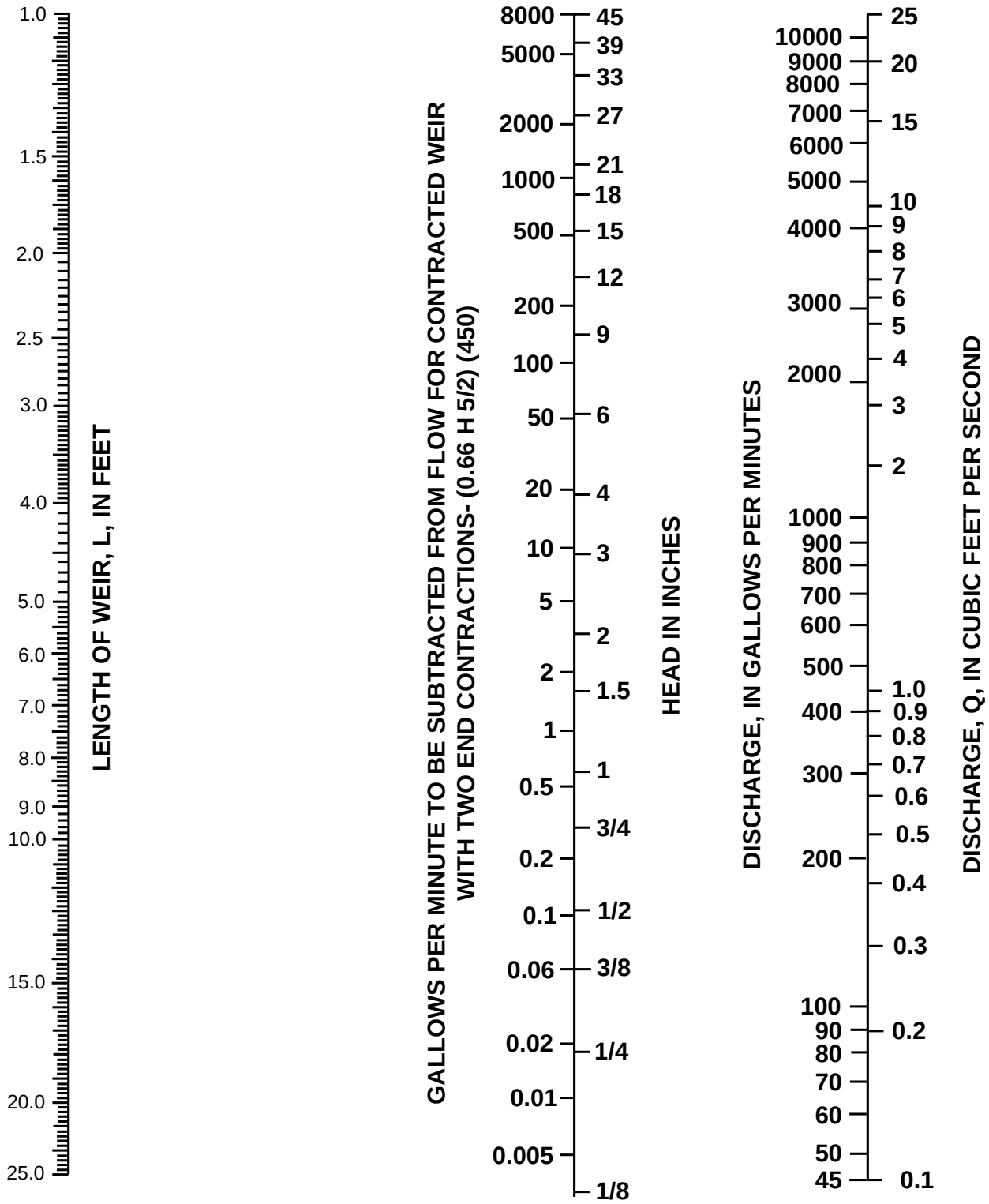

Figure I-5

Flow Curves for Parshall Flumes
(Associated Water and Air Resource Engineers, Inc., 1973)

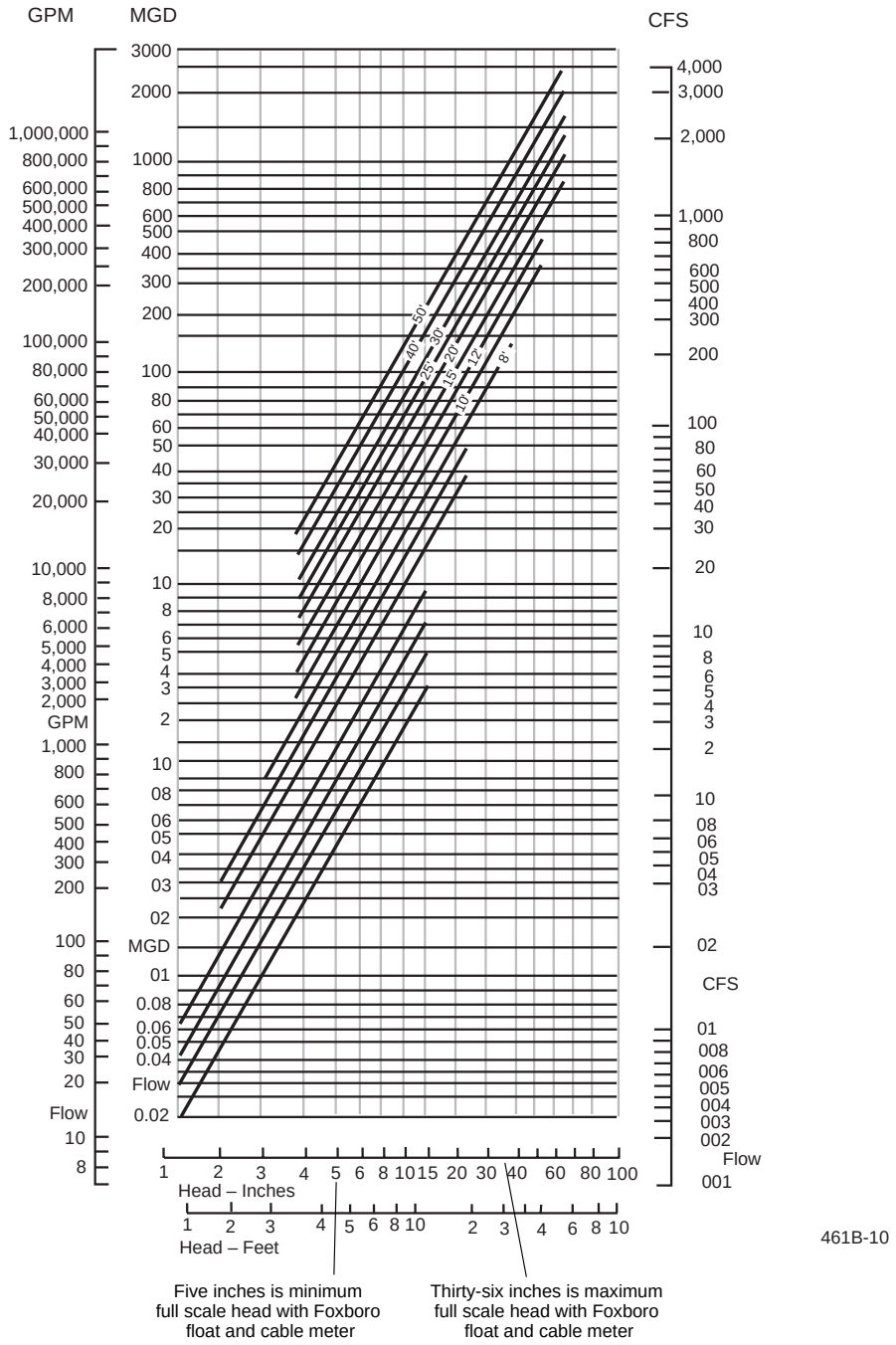

Figure I-6

Dimensions and Capacities of Parshall Measuring Flumes for Various Throat Widths (Associated Water and Air Resource Engineers, Inc., 1973)

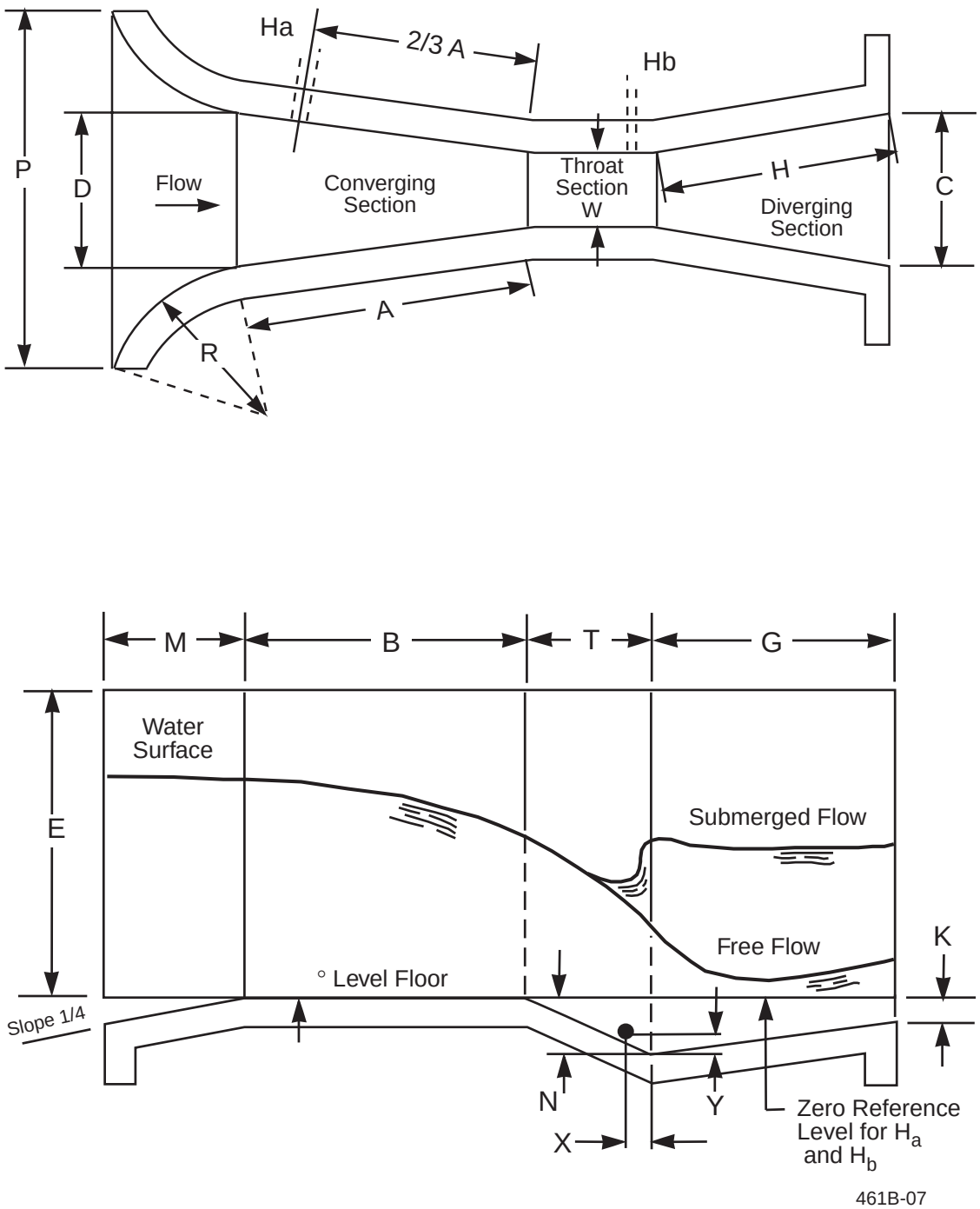

Figure I-6
Dimensions and Capacities of Parshall Measuring Flumes for Various Throat Widths (Continued)

W		A		⅔A		B		C		D		E		T		G		H		K	M		N	P		R		X	Y	Free-Flow Capacity (Second-Foot*)	
Ft.	In.	Ft.	In.	Ft.	In.	Ft.	In.	Ft.	In.	Ft.	In.	Ft.	In.	Ft.	In.	Ft.	In.	Ft.	In.	In.	In.	Ft.	In.	Ft.	In.	Ft.	In.	In.	In.	Mini-mum	Maxi-mum
0	3	1	6⅜	1	¼	1	6	0	7	0	10 3/16	1-1½	0	0	6	1	0	1	5/32	1	0	0	2¼	0	0	0	0	1	1½	0.03	1.9
0	6	2	7/16	1	4 5/16	2	0	1	3½	1	3⅝	2	0	1	0	2	0	0	0	3	1	0	4½	2	11½	1	4	2	3	0.05	3.9
0	9	2	10⅝	1	11⅛	2	10	1	3	1	10⅝	2	6	1	0	1	6	0	0	3	1	0	4½	3	6½	1	4	2	3	0.09	8.9
1	0	4	6	3	0	4	4⅞	2	0	2	9¼	3	0	2	0	3	0	0	0	3	1	3	9	4	10¾	1	8	2	3	0.11	16.1
1	6	4	9	3	2	4	7⅞	2	6	3	4⅜	3	0	2	0	3	0	0	0	3	1	3	9	5	6	1	8	2	3	0.15	24.6
2	0	5	0	3	4	4	10⅞	3	0	3	11½	3	0	2	0	3	0	0	0	3	1	3	9	6	1	1	8	2	3	0.42	33.1
3	0	5	6	3	8	5	4¾	4	0	5	1⅞	3	0	2	0	3	0	0	0	3	1	3	9	7	3½	1	8	2	3	0.61	50.4
4	0	6	0	4	0	5	10⅝	5	0	6	4¼	3	0	2	0	3	0	0	0	3	1	6	9	8	10¾	2	0	2	3	1.30	67.9
5	0	6	6	4	4	6	4½	6	0	7	6⅝	3	0	2	0	3	0	0	0	3	1	6	9	10	1¼	2	0	2	3	1.60	85.6
6	0	7	0	4	8	6	10⅜	7	0	8	9	3	0	2	0	3	0	0	0	3	1	6	9	11	3½	2	0	2	3	2.60	103.5
7	0	7	6	5	0	7	4¼	8	0	9	11⅜	3	0	2	0	3	0	0	0	3	1	6	9	12	6	2	0	2	3	3.00	121.4
8	0	8	0	5	4	7	10⅛	9	0	11	1¾	3	0	2	0	3	0	0	0	3	1	6	9	13	8¼	2	0	2	3	3.50	139.5

*Equals 1 cu. ft. per sec.

LEGEND:

- W Width of flume throat.
- A Length of side wall of converging section.
- ⅔A Distance back from end of crest to gauge point.
- B Axial length of converging section.
- C Width of downstream end of flume.
- D Width of upstream end of flume.
- E Depth of flume.
- T Length of flume throat.
- G Axial length of diverging section.
- H Length of side wall of the diverging section.
- K Difference in elevation between lower end of flume and crest.
- M Length of approach floor.
- N Depth of depression in throat below crest.
- P Width between ends of curved wing walls.
- R Radius of curved wing wall.
- X Horizontal distance to H_b gauge point from low point in throat.
- Y Vertical distance to H_b gauge point from low point in throat.

Figure I-7

Effect of Submergence on Parshall Flume Free Discharge
(Civil Engineering, ASCE)

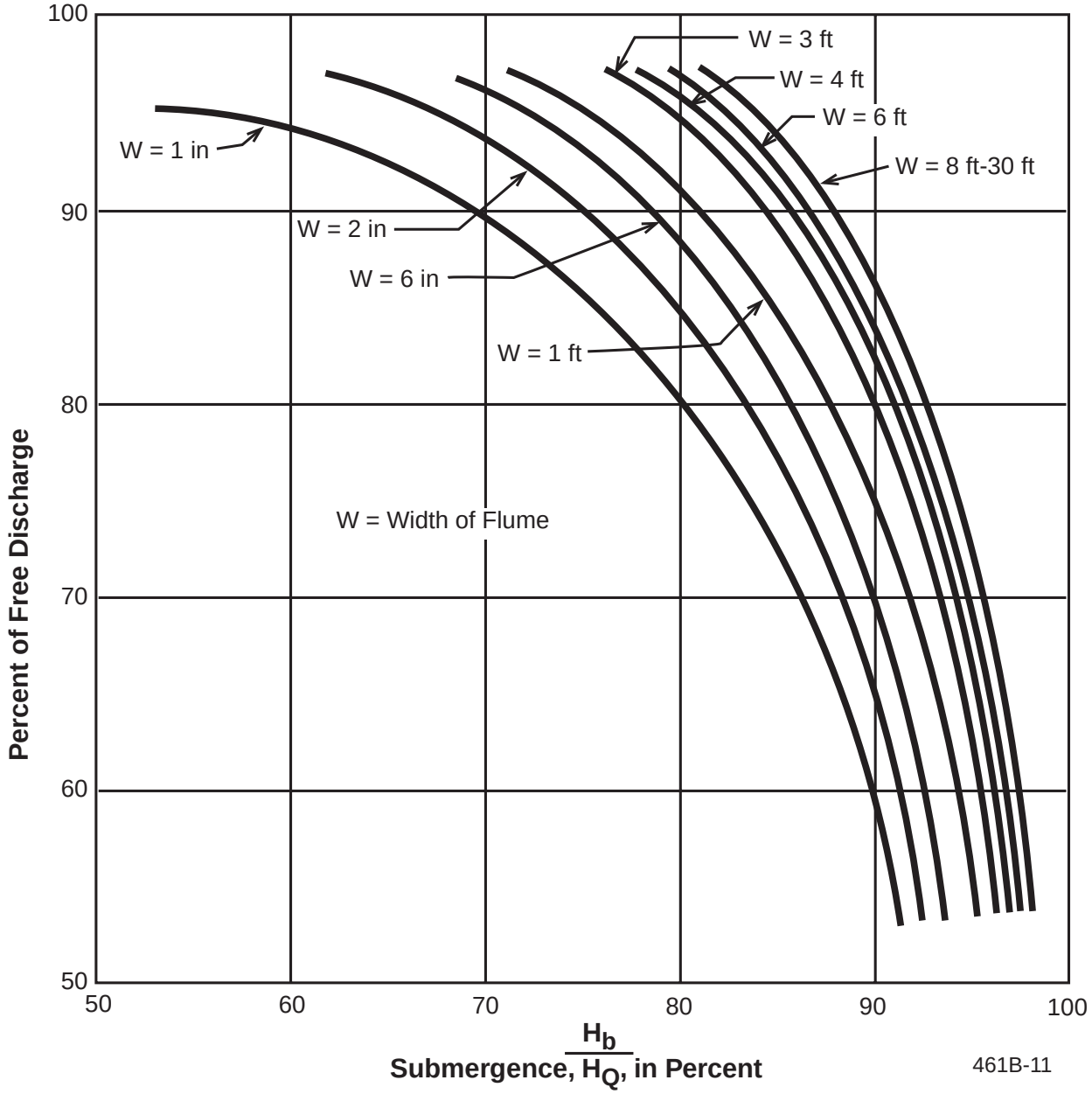

Figure I-8

Free-Flowing Palmer-Bowlus Flume

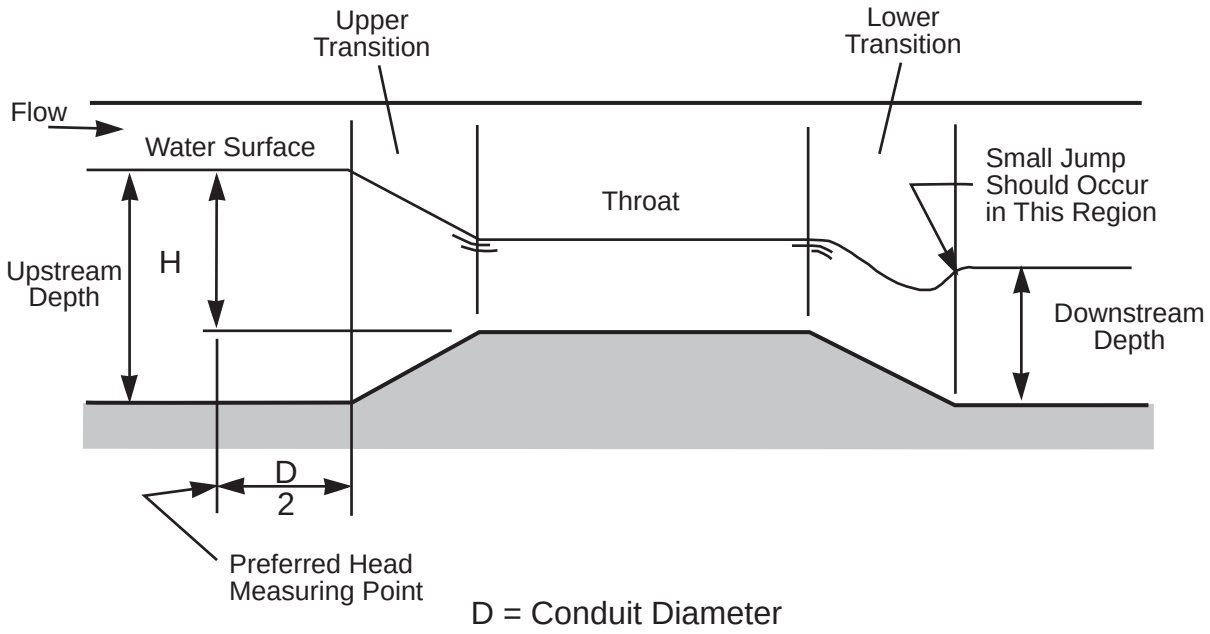

Figure I-9

Configuration and Nomenclature of Venturi Meter

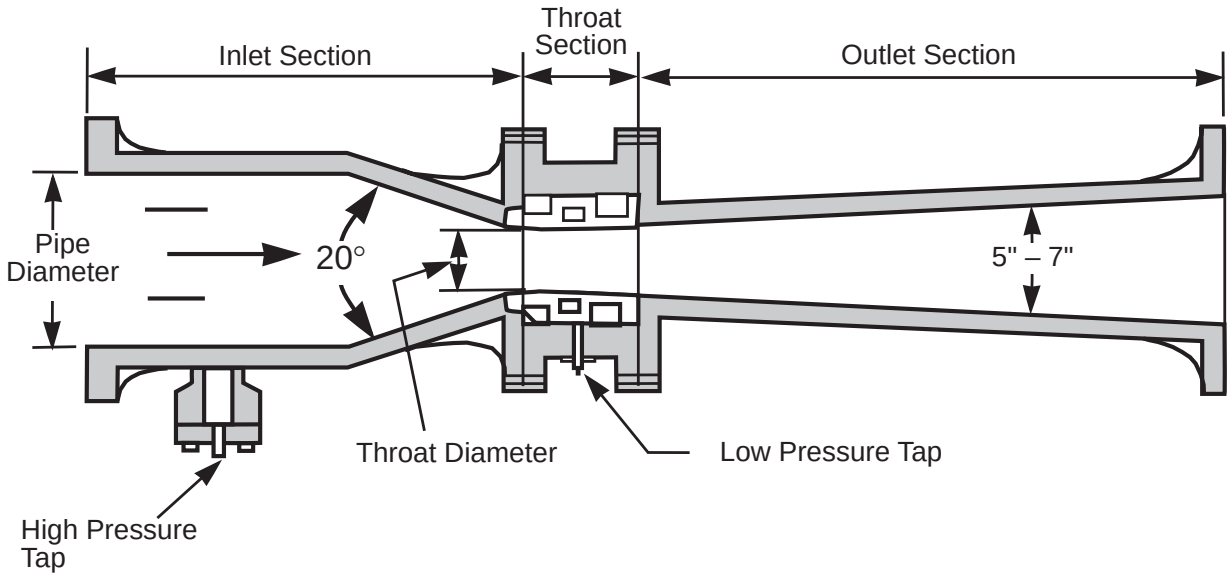

461B-12

Figure I-10

Electromagnetic Flowmeter

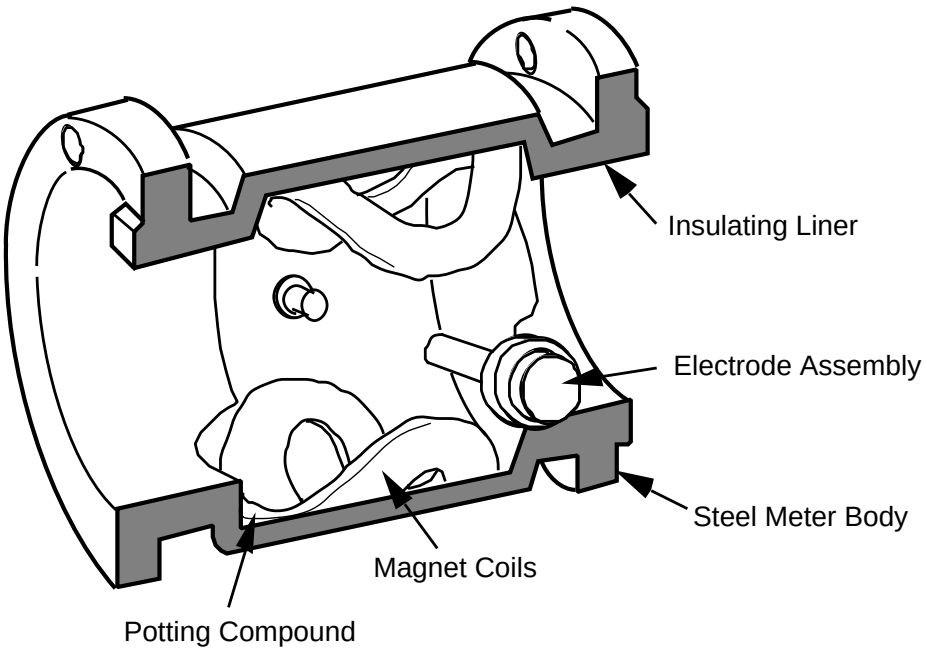

Figure I-11

Propeller Flowmeter

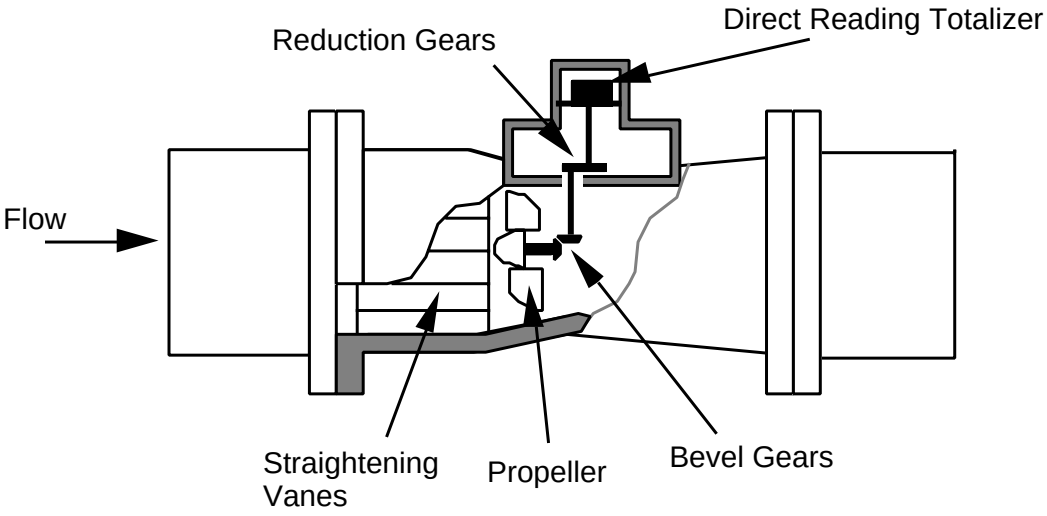

461B-13

Figure I-12

Transit-Time Flowmeter

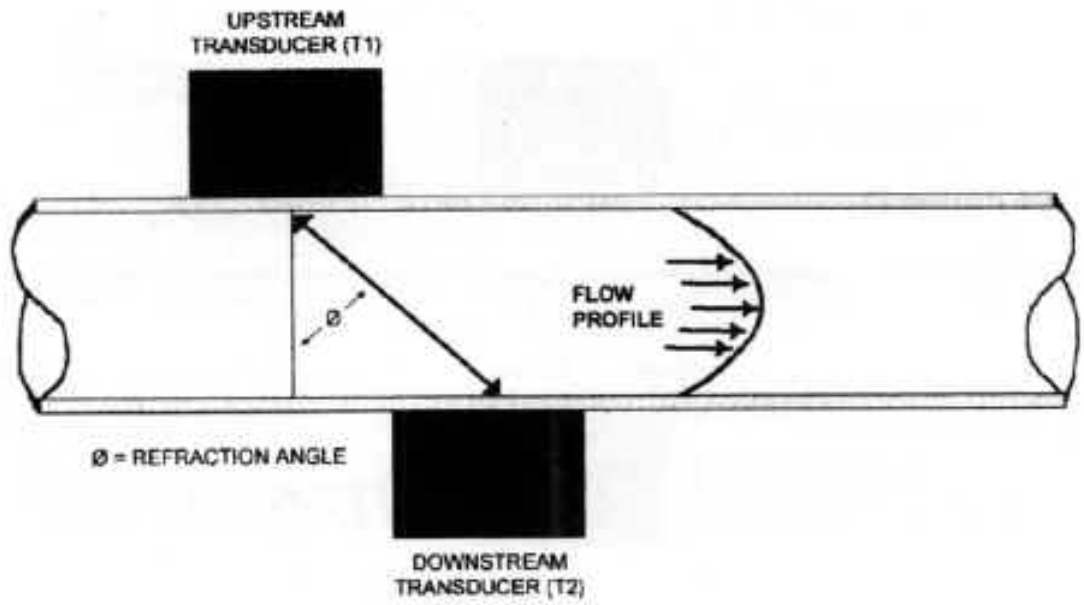

APPENDIX P

NPDES INDUSTRIAL STORM WATER INVESTIGATION AND CASE DEVELOPMENT WORKSHEET (INDUSTRIAL)

This page intentionally left blank.

NPDES Industrial Storm Water Worksheet (Industrial)

Background Information *(complete in field)*

National Database Information			
Inspection Type	**W**		
NPDES ID Number			
Inspection Date			
Inspector Type	EPA	State	EPA Oversight
Facility Type			

General	
Inspector Name	
Telephone	
Entry Time	
Exit Time	
Signature	

Facility Location Information				
Name/Location/ Mailing Address				
GPS Coordinates	Latitude		Longitude	
Receiving Water(s)/MS4's				

Contact Information		
	Name	Telephone
Owner/Permittee		
Operator		
Co-Permittee		
Facility Contact		
Authorized Official(s)		

Site Information:	
Industrial Activity that qualifies the facility for permit coverage	
SIC Code(s)	

Basic Permit Information *(circle one)*		
Permit Coverage	Y	N
Permit Type	General	Individual
Copy of NOI on site?	Y	N
NOI Date		

Basic SWPPP Information		
SWPPP on site	Y	N
SWPPP Satisfactory*	Y	N
SWPPP Implementation Satisfactory	Y	N

*A Satisfactory SWPPP must be both current and complete (see pages 4, 5, and 6 of this checklist).

SWPPP Implementation *(complete in field)*

NPDES Industrial Storm Water Worksheet (Industrial)

General	
Industrial Activity	*(describe principal product, production rate, potential pollutants, areas exposed to precipitation, direction of storm water flow)*
Facility Description	(*describe age and size of facility, number of employees, hours of operation*)

Storm Water Controls	
List the structural and non-structural controls employed by the facility.	*(provide a brief description of each)*
Are the controls reasonable and appropriate for the facility?	*(indicate "yes" or "no", or if not appropriate, explain)*
Are the controls installed correctly and maintained in effective operating condition?	*(indicate "yes" or "no", or if not appropriate, explain)*

NPDES Industrial Storm Water Worksheet (Industrial)

SWPPP Implementation *(continued)*

Storm Water Controls (continued)	
Provide a brief description of other controls that manage/prevent/ minimize storm water runoff.	*(e.g., erosion and sediment controls, exposure minimization, diversion structures, pollution prevention, inlet protection/control at storm drains)*

Miscellaneous	
Any evidence of discharge to receiving waters?	*(e.g., storm water runoff, dry weather discharge, co-mingling of process waste water)*
Do the storm water outfalls on site correspond with those listed on the site map and in SWPPP?	*(indicate "yes" or "no", or if not appropriate, explain)*

NPDES Industrial Storm Water Worksheet (Industrial)

SWPPP Review *(can be completed in office)*

General			Notes:
Is there a SWPPP?	Y	N	
Is a copy of the SWPPP on site?	Y	N	
Did all “operators” and co-permittees sign the SWPPP?	Y	N	
Did the signatures include the certification statement?	Y	N	
Were the signatories authorized to sign?	Y	N	
Is an individual/team responsible for developing/implementing SWPPP identified (e.g., pollution prevention team)?	Y	N	
Are employee training records regarding storm water pollution prevention topics included in SWPPP?	Y	N	
Operator evaluation of ESA requirements.	Y	N	

Site Map			Notes:
Is there a site map?	Y	N	
Drainage patterns/ outfalls?	Y	N	
Identification of types of pollutants likely to be discharged from each drainage area?	Y	N	
Location of major structural controls used to reduce pollutants in runoff?	Y	N	
Name of receiving water(s) or MS4's listed?	Y	N	
Is receiving water a tributary to waters of the U.S. (if “yes” indicate name of tributary)?	Y	N	
Location of significant materials exposed to storm water?	Y	N	
Locations of major spills occurring within 3 years from date of NOI?	Y	N	
Location of fueling, maintenance, loading and unloading, material storage, waste disposal?	Y	N	

NPDES Industrial Storm Water Worksheet (Industrial)

SWPPP Review (*continued*)

Summary of Potential Pollutant Sources			Notes:
Description of activities, materials, features of site with potential to contribute significant amounts of pollutants to storm water?	Y	N	

Significant Spills & Leaks			Notes:
List of significant spills and leaks over 3 year time period, description of response taken, and actions to prevent similar spills in the future?	Y	N	

Storm Water Controls			Notes:
Does the SWPPP describe the *non-structural* controls that will be used to prevent/reduce discharge of pollutants in storm water runoff?	Y	N	
Does the SWPPP describe the *structural* controls that will be used to prevent/reduce discharge of pollutants in storm water runoff?	Y	N	
Does the SWPPP describe other controls that will be used to prevent/reduce off-site tracking or blowing of sediment, dust and raw, final or waste materials, or other solid materials and floating debris?	Y	N	
Does the SWPPP incorporate the 8 baseline controls (good housekeeping, minimizing exposure, PM, spill prevention/response procedures, routine inspections and comprehensive site evaluations, employee training, sediment and erosion control, runoff management)?	Y	N	
Does the SWPPP contain completed routine inspection reports/logs regarding reportable implementation of 8 baseline controls?	Y	N	
Does the SWPPP describe the pollutant or activity to be controlled by each selected control and provide an implementation schedule?	Y	N	

SWPPP Review (*continued*)

Non-Storm Water Discharges	Notes:

NPDES Industrial Storm Water Worksheet (Industrial)

Certification that facility has been tested for non-storm water discharges from the site?	Y	N	
Description of testing method, drainage points, observed results, and date of test?	Y	N	

Monitoring			**Notes:**
Are samples collected within 30 minutes of measurable weather events occurring 72 hours after previous measurable weather event?	Y	N	
Were the samples collected and preserved in accordance with 40 CFR 136?			
Was proper chain-of-custody procedures followed?			

Photograph Log
1.
2.
3.
4.

This page intentionally left blank.

APPENDIX Q

INDUSTRIAL SOURCE CONTROL BMP QUESTIONS

This page intentionally left blank.

Industrial Source Control BMP Questions

FUELING

1. Has spill and overfill prevention equipment been installed?
2. Are vehicle fuel tanks often "topped off"?
3. Have steps been taken to protect fueling areas from rain?
4. Is runon to the fueling area minimized?
5. Are oil/water separators or oil and grease traps installed in storm drains in the fueling area?
6. Is the fueling area cleaned by hosing or washing?
7. Do you control petroleum spills?
8. Are employees aware of ways to reduce contamination of storm water at fueling stations?
9. Where does the water drain from the fueling area?
10. Do any of the drains connect to wells?

SUMMARY OF FUELING STATION BMPs
• Consider installing spill and overflow protection. • Discourage topping off of fuel tanks. • Reduce exposure of the fuel area to storm water. • Use dry cleanup methods for the fuel area. • Use proper petroleum spill control. • Encourage employee participation.

MAINTAINING VEHICLES AND EQUIPMENT

1. Is maintenance which involves cleaning of vehicle and/or equipment parts (including engine, transmission, brake or other miscellaneous parts) performed on-site?
2. Does the cleaning involve the use of solvents or surfactants?
3. Has the facility looked into using nontoxic or less toxic cleaners or solvents?
4. Are work areas and spills washed or hosed down with water?
5. Are spills or materials washed or poured down the drain?
6. Are oil filters completely drained before recycling or disposal?
7. Are incoming vehicles and equipment checked for leaking oil and fluids?
8. Are wrecked vehicles or damaged equipment stored onsite?
9. Does the facility recycle any of the automotive fluids or parts?
10. Can the facility reduce the number of different solvents used?
11. Are wastes separated?
12. Does the facility use recycled products?

SUMMARY OF VEHICLE MAINTENANCE AND REPAIR BMPs
• Check for leaking oil and fluids. • Use nontoxic or low-toxicity materials. • Drain oil filters before disposal or recycling. • Do not pour liquid waste down drains. • Recycle engine fluids and batteries. • Segregate and label wastes. • Buy recycled products.

PAINTING VEHICLES AND EQUIPMENT

1. Are vehicles or other equipment painted on site?
2. In preparation for painting, is old paint removed physically (sanding, sand blasting, etc.) or chemically (solvent paint stripper)?
3. Before applying new paint, are surfaces chemically prepared (coating, etching, cleaning etc.)?
4. Is care taken to prevent paint wastes from contaminating storm water runoff?
5. Are wastes from sanding contained?
6. Are parts inspected before painting?
7. Is the facility using painting equipment that creates little waste?
8. Are employees trained to use spray equipment correctly?
9. Does the facility recycle paint, paint thinner, or solvents?
10. Are wastes separated?
11. Can the facility reduce the number of solvents used?
12. Does the facility use recycled products?

SUMMARY OF PAINTING OPERATION BMPs
• Inspect parts prior to painting. • Contain sanding wastes. • Prevent paint waste from contacting storm water. • Use proper interim storage of waste paint, solvents, etc. • Evaluate efficiency of equipment. • Recycle paint, paint thinner, and solvents. • Segregate wastes. • Buy recycled products.

WASHING VEHICLES AND EQUIPMENT

1. Has the facility considered using phosphate-free biodegradable detergents?
2. Are vehicles, equipment, or parts washed over the open ground?

SUMMARY OF VEHICLE AND EQUIPMENT WASHING BMPs
• Consider use of phosphate-free detergent. • Use designated cleaning areas. • Consider recycling wash water.

LOADING AND UNLOADING MATERIALS

1. Are tank trucks and material delivery vehicles located where spills or leaks can be contained?
2. Is loading/unloading equipment checked regularly for leaks?
3. Are loading/unloading docks or areas covered to prevent exposure to rainfall?
4. Are loading/unloading areas designed to prevent storm water runon?
5. Is piping system routinely checked for leaks?
6. Are there alarms to alert staff of potential problems such as high levels in receiving tanks or pressure irregularities in transmission lines?
7. Where appropriate (especially where transmission lines are long or buried), is the piping system outfitted with flow meters to ensure that the amount unloaded equals the amount received?

SUMMARY OF LOADING/UNLOADING OPERATIONS BMPs
• Contain leaks during transfer. • Check equipment regularly for leaks. • Limit exposure of material to rainfall. • Prevent storm water runon.

LIQUID STORAGE IN ABOVE-GROUND TANKS

1. Do storage tanks contain liquid hazardous materials, hazardous wastes, or oil?
2. Are operators trained in correct operating procedures and safety activities?
3. Does the facility have safeguards against accidental discharge?
4. Are tank systems inspected, and is tank integrity tested regularly?
5. Are tanks bermed or surrounded by a secondary containment system?

SUMMARY OF BMPs FOR LIQUID STORAGE IN ABOVE-GROUND TANKS
• Comply with applicable State and Federal laws. • Properly train employees. • Install safeguards against accidental release. • Routinely inspect tanks and equipment. • Consider installing secondary containment.

INDUSTRIAL WASTE MANAGEMENT AND OUTSIDE MANUFACTURING

1. Has the facility looked for ways to reduce waste at the facility?
2. Has the facility considered waste reduction BMPs?
3. Are industrial waste management and outside manufacturing areas checked often for spills and leaks?
4. Are industrial waste management areas or manufacturing activities covered, enclosed, or

bermed?
5. Are vehicles used to transport wastes to the land disposal or treatment site equipped with anti-spill equipment?
6. Does the facility use loading systems that minimize spills and fugitive losses such as dust or mists?
7. Are sediments or wastes prevented from being tracked offsite?
8. Is storm water runoff minimized from the land disposal site?

SUMMARY OF INDUSTRIAL WASTE MANAGEMENT AND OUTSIDE MANUFACTURING BMPs
• Conduct a waste reduction assessment. • Institute industrial waste source reduction and recycling BMPs. • Prevent runoff and runon from contacting the waste management area. • Minimize runoff from land application sites.

OUTSIDE STORAGE OF RAW MATERIALS, BY-PRODUCTS, OR FINISHED PRODUCTS

1. Are materials protected from rainfall, runon, and runoff?

SUMMARY OF BMPs FOR OUTSIDE STORAGE OF RAW MATERIALS, BY-PRODUCTS, OR FINISHED PRODUCTS
• Cover or enclose materials.

SALT STORAGE

1. Are salt piles protected from rain?
2. Is storm water runon prevented from contacting storage piles and loading and unloading areas?

SUMMARY OF SALT STORAGE FACILITIES BMPs
• Put salt under a roof. • Use temporary covers. • Enclose or berm transfer areas.

APPENDIX R

NPDES INDUSTRIAL STORM WATER INVESTIGATION AND CASE DEVELOPMENT WORKSHEET (CONSTRUCTION)

This page intentionally left blank.

NPDES Industrial Storm Water Worksheet (Construction)

National Database Information			
Inspection Type			
NPDES ID Number			
Inspection Date			
Inspector Type *(circle one)*	EPA	State	EPA Oversight
Facility Type *(circle one)*	Commercial/ Industrial	Residential	Municipal

General	
Inspector Name	
Telephone	
Entry Time	
Exit Time	
Signature	

Facility Location Information					
Name/Location/ Mailing Address					
GPS Coordinates	Latitude		Longitude		
Receiving Water(s)					
Disturbed Area		Start Date		Stop Date	

Contact Information	Name(s)	Telephone
Name(s) and Role(s) of All Parties Meeting the Definition of Operator		
Facility Contact		
Authorized Official(s)		

Site Information: *(circle all that apply)*

Nature of Project	Residential	Commercial/ Industrial	Roadway	Private	Federal	State/ Municipal	Other
Construction Stage	Clearing/ Grubbing	Rough Grading	Infrastructure	Building Const.	Final Grading	Final Stabilization	

NPDES Industrial Storm Water Worksheet (Construction)

Basic Permit Information		
Permit Coverage *ESO Element 3 & 4*	Y	N
Permit Type	General	Individual
Permit notice/sign visibly posted including: copy of NOI, contact name & phone number, location of SWPPP *ESO Element 41*	Y	N
NOI Date		
If applicable, is waiver certification & approval on file?	Y	N

Basic SWPPP Information		
SWPPP Prepared & Available *ESO Element 5 & 30*	Y	N
SWPPP Contents Satisfactory *ESO Elements 5 - 31*	Y	N
SWPPP Implementation Satisfactory *ESO Elements 32 - 48*	Y	N
SWPPP Date		
Intentionally left blank		

SWPPP Review *(can be completed in office)*

General			Notes:
Is there a SWPPP? *ESO Element 5*	Y	N	
SWPPP completed prior to NOI submission? *ESO Element 6*	Y	N	
Copy of permit language? *ESO Element 25*	Y	N	
Is SWPPP consistent with state/tribal/local regulations and permits? *ESO Element 26*	Y	N	
SWPPP updated to incorporate changes to State, Tribal, Local erosion plans? *ESO Element 27*	Y	N	
Have copies of inspection reports/all other documentation been retained as part of the SWPPP for 3 years from date permit coverage expires? *ESO Element 28*	Y	N	
Is a copy of the SWPPP on site or made available? *ESO Element 30*	Y	N	
Did all "operators" sign/certify the SWPPP? *ESO Element 31*	Y	N	

NPDES Industrial Storm Water Worksheet (Construction)

Site Description			Notes:
SWPPP identifies potential sources of pollution? *ESO Element 7*	Y	N	
SWPPP identifies all operators and their areas of control? *ESO Element 8*	Y	N	
Is there a site description? *ESO Element 9*	Y	N	
Nature/sequence of construction activity? *ESO Element 9A - 9B*	Y	N	
Total area of site and total area to be disturbed? *ESO Element 9C*	Y	N	
Is there a general location map? *ESO Element 9D*	Y	N	
Is there a site map? *ESO Element 9E*	Y	N	
Drainage patterns/outfalls on site map? *ESO Element 9F*	Y	N	
Area of soil disturbance on site map? *ESO Element 9F*	Y	N	
Location of major structural controls on site map? *ESO Element 9F*	Y	N	
Location of storm water discharges to a surface water on site map? *ESO Element 9F*	Y	N	
Location of materials or equipment storage on site map (on-site or off-site)? *ESO Element 9F*	Y	N	
Location/description industrial activities? *ESO Element 9G*	Y	N	
Name of Receiving water(s) or MS4 listed?	Y	N	*Note: Indicate whether receiving water is 303(d) listed.*

NPDES Industrial Storm Water Worksheet (Construction)

Site Description			Notes:
Does the SWPPP include dates of major grading activities, temporary/permanent construction cessation, and initiation of stabilization practices? *ESO Element 14*	Y	N	
Endangered Species Documentation? *ESO Element 23*	Y	N	

Controls to Reduce Pollutants			Notes:
Does the SWPPP include a description of all pollution control measures (BMPs) that will be implemented to control pollutants in storm water discharges, including sequence and which operator responsible for implementation? *ESO Element 10 A - C*	Y	N	
Does the SWPPP include a description of interim and permanent *stabilization practices* (e.g., seeding, mulching, riprap for the site)? *ESO Element 11; 12*	Y	N	
Does the SWPPP identify the contractor(s) and timing by which *stabilization practices* will be implemented? *ESO Element 13*	Y	N	
Does the SWPPP include a description of *structural practices* (e.g., vehicle track-out, silt fences, sediment traps, storm drain inlet protection) for the site? *ESO Element 15*	Y	N	
Does the SWPPP identify the contractor(s) and timing by which *structural practices* will be implemented? *ESO Element 10B - 10C*	Y	N	
Does the SWPPP identify storm water management measures to address storm water runoff once the construction is completed (e.g., retention ponds, velocity dissipation controls)? *ESO Element 16*	Y	N	

NPDES Industrial Storm Water Worksheet (Construction)

Controls to Reduce Pollutants			Notes:
Does SWPPP describe measures to prevent discharge of dredge/fill materials to waters of the U.S.? Does site have 404 permit? *ESO Element 17*	Y	N	
Does SWPPP describe measures to minimize off-site vehicle tracking and generation of dust? *ESO Element 18*	Y	N	
Does SWPPP describe controls for pollutants from storage of construction or waste materials? *ESO Element 19*	Y	N	
Does the SWPPP describe controls for pollutants from non-construction activities? *ESO Element 20*	Y	N	
Does SWPPP identify allowable non-storm water discharges? *ESO Element 21*	Y	N	
Does SWPPP ensure implementation of pollution prevention measures for non-storm water discharges? *ESO Element 22*	Y	N	
Is SWPPP revised when BMPs added/modified within 7 days after inspection reveals problems? *ESO Element 29*	Y	N	

Inspections			Notes:
Inspections performed once every 7 days, or every 14 days within 24 hours of a rain event greater 0.5"? *ESO Element 32*	Y	N	
Inspections performed by qualified personnel? *ESO Element 33*	Y	N	
All disturbed areas and/or used for storage and exposed to rain inspected? *ESO Element 34*	Y	N	
All pollution control measures inspected to ensure proper operation? *ESO Element 35*	Y	N	

NPDES Industrial Storm Water Worksheet (Construction)

Inspections			Notes:
All discharge locations inspected if accessible, or if not accessible, are nearby downstream locations inspected? *ESO Element 36; 37*	Y	N	
Entrance/exit inspected for off-site tracking? *ESO Element 38*	Y	N	
Inspection report contain all required items and certified? *ESO Element 39; 40*	Y	N	

Site Description:

NPDES Industrial Storm Water Worksheet (Construction)

SWPPP Implementation (*complete in field)*	
Stabilization Practices	
List and describe stabilization practices *ESO Element 43, 48*	*(e.g., seeding, mulching, geotextiles, sod stabilization)*

NPDES Industrial Storm Water Worksheet (Construction)

Stabilization Practices	
Are stabilization measures initiated no more than 14 days after temporary or permanent construction cessation? *ESO Element 46*	*(e.g., indicate "yes" or "no"; if "yes", how long without stabilization measures?)*

NPDES Industrial Storm Water Worksheet (Construction)

Structural Practices	
List and describe structural controls *ESO Element 42, 43, 47*	*(e.g., silt fences, hay bales, storm drain inlet protection, sedimentation pond, rip rap, check dam, diversion structure, off-site vehicle track-out)*

Non-Structural Practices	
Street Cleaning *ESO Element 44*	*(e.g., describe measures taken to remove offsite accumulation of sediment)*

NPDES Industrial Storm Water Worksheet (Construction)

Non-Structural Practices	
Good Housekeeping & Waste Disposal Practices *ESO Element 45*	*(e.g., describe measures taken to prevent litter and debris from becoming a pollutant source)*
Equipment Wash/ Maintenance Area *ESO Elements 43*	*(provide brief description)*
Concrete Washout Areas *ESO Elements 43*	*(provide brief description)*

NPDES Industrial Storm Water Worksheet (Construction)

Miscellaneous	
Evidence of Sediment Deposition to Surface Waters **ESO Eligibility - if "yes," site not eligible for ESO*	*(e.g., significant turbidity observed in a receiving water body)*
Pollution prevention measures for non-storm water discharges? **ESO Eligibility - If evidence of non-allowable non-storm water discharges, site not eligible for ESO*	(*provide brief description and determine whether/if non-storm water discharges allowable)*
Has implementation of additional/modified BMPs been completed before next anticipated storm event? *ESO Element 43.C.1*	*(provide brief description)*

NPDES Industrial Storm Water Worksheet (Construction)

Notes on SWPPP Implementation

NPDES Industrial Storm Water Worksheet (Construction)

Photograph Log
1. *Insert additional rows as needed

APPENDIX S

CONSTRUCTION SOURCE CONTROL BMP QUESTIONS

This page intentionally left blank.

Construction Source Control BMP Questions

SOIL EROSION AND SEDIMENT CONTROL PRACTICES

MINIMIZE THE AMOUNT OF DISTURBED SOIL

1. Does the site plan require a significant amount of grade changes?
2. Are there portions of the site that do not have to be cleared for construction to proceed?
3. Can construction be performed in stages, so that the entire site does not have to be cleared at one time?
4. Are there portions of the site that will be disturbed then left alone for long periods of time?
5. Does the facility stabilize all disturbed areas after construction is complete?
6. Does snow prevent the facility from seeding an area?
7. Is there enough rainfall to allow vegetation to grow?

PREVENT RUNON FROM FLOWING ACROSS DISTURBED AREAS

1. Does runoff from the undisturbed uphill areas flow onto the construction site?
2. Will runoff flow down a steeply sloped, disturbed area on the site?
3. Is there a swale or stream that runs through the construction site?
4. Does construction traffic have to cross drainage swales or streams?

SLOW DOWN THE RUNOFF TRAVELING ACROSS THE SITE

1. Is the site gently sloped?
2. Is the site stabilized with vegetation?
3. Does runoff concentrate into drainage swales on the site?

REMOVE SEDIMENT FROM ONSITE RUNOFF BEFORE IT LEAVES THE SITE

1. Does the construction disturb an area 10 acres or larger that drains to a common location?
2. Is a sediment basin attainable on the site?
3. Does runoff leave the disturbed area as overland flow?
4. Is the flow concentrated in channels as it leaves the disturbed areas?
5. Are structural controls located along the entire downhill perimeter of all disturbed areas?
6. Is there a piped storm drain system with inlets in a disturbed area?

MEET OR EXCEED LOCAL/STATE REQUIREMENTS FOR EROSION AND SEDIMENT CONTROL

1. Does the State or local government require erosion and sediment control for construction projects?
2. Does the State or local government have an erosion and sediment control requirement that is different from the requirements of the NPDES storm water permit?

OTHER CONTROLS

GOOD HOUSEKEEPING

1. Does the facility appear to implement good housekeeping practices?

WASTE DISPOSAL

1. What steps are taken to ensure that construction waste is properly disposed of?
2. What management practices are used to minimize or prevent impacts on storm water from hazardous products on the construction site?
3. Are concrete trucks allowed to washout or dump onsite?
4. Is sandblasting performed at the site? If so, what is done with the used grit?

MINIMIZING OFFSITE VEHICLE TRACKING OF SEDIMENTS

1. What measures have been taken to prevent offsite vehicle tracking?

SANITARY/SEPTIC DISPOSAL

1. How are sanitary or septic wastes managed?
2. How does the facility demonstrate compliance with State or local sanitary or septic system regulations?

MATERIAL MANAGEMENT

1. What types of materials are found on the construction site?
2. How are these materials managed?
3. What risks are present onsite as a result of material management practices?
4. Is the facility implementing any methods to reduce potential risks from material management?
5. If applicable, how are pesticides managed at the site?
6. If applicable, how are petroleum products managed at the site?
7. If applicable, what steps are taken to reduce nutrient pollution from fertilizers and detergents?

SPILLS

1. Does the facility have a spill control plan for the site?
2. Does the facility know what spill prevention methods and responses will be used?

CONTROL OF ALLOWABLE NON-STORM WATER DISCHARGES

1. What non-storm water discharges are present at the site?
2. How does the facility manage the non-storm water discharges?
3. How are allowable non-storm water discharges addressed in the storm water Pollution Prevention Plan?

4. What types of controls or practices are used to prevent pollution from non-storm water discharges?
5. What types of controls are used for discharges that have sediments?

This page intentionally left blank.

APPENDIX T

NOI FORM FOR STORMWATER

This page intentionally left blank.

This Form Replaces Form 3510-9 (8-98)
Refer to the Following Pages for Instructions

Form Approved OMB Nos. 2040-0188 and 2040-0211

NPDES Form

United States Environmental Protection Agency
Washington, DC 20460

Notice of Intent (NOI) for Storm Water Discharges Associated with Construction Activity Under an NPDES General Permit

Submission of this Notice of Intent (NOI) constitutes notice that the party identified in Section II of this form requests authorization to discharge pursuant to the NPDES Construction General Permit (CGP) permit number identified in Section I of this form. Submission of this NOI also constitutes notice that the party identified in Section II of this form meets the eligibility requirements of the CGP for the project identified in Section III of this form. Permit coverage is required prior to commencement of construction activity until you are eligible to terminate coverage as detailed in the CGP. To obtain authorization, you must submit a complete and accurate NOI form. Refer to the instructions at the end of this form.

I. Permit Number

II. Operator Information

Name:

IRS Employer Identification Number (EIN): -

Mailing Address:

Street:

City: State: Zip Code: -

Phone: - - Fax (optional): - -

E-mail (optional):

III. Project/Site Information

Project/Site Name:

Project Street/Location:

City: State: Zip Code: -

County or similar government subdivision:

Latitude/Longitude (Use one of three possible formats, and specify method)

Latitude 1. _° _′ _′′ N (degrees, minutes, seconds)
2. _° _ _ . _′ N (degrees, minutes, decimal)
3. . _° N (decimal)

Longitude 1. _° _′ _′′ W (degrees, minutes, seconds)
2. _ _ _° . _′ W (degrees, minutes, decimal)
3. . _° W (decimal)

Method: U.S.G.S. topographic map EPA web site GPS Other:
• If you used a U.S.G.S. topographic map, what was the scale:

Project Located in Indian country? Yes No
If so, name of Reservation or if not part of a Reservation, put “Not Applicable”:

Estimated Project Start Date: / / (Month Date Year) Estimated Project Completion Date: / / (Month Date Year)

Estimated Area to be Disturbed (to the nearest quarter acre): .

IV. SWPPP Information

Has the SWPPP been prepared in advance of filing this NOI? Yes No

Location of SWPPP for viewing: Address in Section II Address in Section III Other
If Other:

SWPPP Street:

City:

State: Zip Code: -

SWPPP Contact Information (if different than that in Section II):

Name:

Phone: - - Fax (optional): - -

E-mail (optional):

V. Discharge Information

Identify the name(s) of waterbodies to which you discharge. _____

_____

Is this discharge consistent with the assumptions and requirements of applicable EPA approved or established TMDL(s)?

Yes No

VI. Endangered Species Information

Under which criterion of the permit have you satisfied your ESA eligibility obligations?

A B C D E F

- If you select criterion F, provide permit tracking number of operator under which you are certifying eligibility:

VII. Certification Information

I certify under penalty of law that this document and all attachments were prepared under my direction or supervision in accordance with a system designed to assure that qualified personnel properly gathered and evaluated the information submitted. Based on my inquiry of the person or persons who manage the system, or those persons directly responsible for gathering the information, the information submitted is, to the best of my knowledge and belief, true, accurate, and complete. I am aware that there are significant penalties for submitting false information, including the possibility of fine and imprisonment for knowing violations.

Print Name: _____

Print Title: _____

Signature: _____

Date: _____

Instructions for Completing EPA Form 3510-9

Notice of Intent (NOI) for Storm Water Discharges Associated with Construction Activity Under an NPDES General Permit

NPDES Form This Form Replaces Form 3510-9 (8/98) Form Approved OMB Nos. 2040-0188 and 2040-0211

Who Must File an NOI Form

Under the provisions of the Clean Water Act, as amended (33 U.S.C. 1251 et.seq.; the Act), federal law prohibits storm water discharges from certain construction activities to waters of the U.S. unless that discharge is covered under a National Pollutant Discharge Elimination System (NPDES) Permit. Operator(s) of construction sites where one or more acres are disturbed, smaller sites that are part of a larger common plan of development or sale where there is a cumulative disturbance of at least one acre, or any other site specifically designated by the Director, must submit an NOI to obtain coverage under an NPDES general permit. Each person, firm, public organization, or any other entity that meets either of the following criteria must file this form: (1) they have operational control over construction plans and specifications, including the ability to make modifications to those plans and specifications; or (2) they have day-to-day operational control of those activities at the project necessary to ensure compliance with SWPPP requirements or other permit conditions. If you have questions about whether you need an NPDES storm water permit, or if you need information to determine whether EPA or your state agency is the permitting authority, refer to *www.epa.gov/npdes/stormwater/cgp* or telephone the Storm Water Notice Processing Center at (866) 352-7755.

Where to File NOI Form

See the applicable CGP for information on where to send your completed NOI form.

Completing the Form

Obtain and read a copy of the appropriate EPA Storm Water Construction General Permit for your area. To complete this form, type or print, using uppercase letters, in the appropriate areas only. Please place each character between the marks (abbreviate if necessary to stay within the number of characters allowed for each item). Use one space for breaks between words, but not for punctuation marks unless they are needed to clarify your response. If you have any questions on this form, refer to *www.epa.gov/npdes/stormwater/cgp* or telephone the Storm Water Notice Processing Center at (866) 352-7755. Please submit original document with signature in ink - do not send a photocopied signature.

Section I. Permit Number

Provide the number of the permit under which you are applying for coverage (see Appendix B of the general permit for the list of eligible permit numbers).

Section II. Operator Information

Provide the legal name of the person, firm, public organization, or any other entity that operates the project described in this application. An operator of a project is a legal entity that controls at least a portion of site operations and is not necessarily the site manager. Provide the employer identification number (EIN from the Internal Revenue Service; IRS), also commonly referred to as your taxpayer ID. If the applicant does not have an EIN enter "NA" in the space provided. Also provide the operator's mailing address, telephone number, fax number (optional) and e-mail address (if you would like to be notified via e-mail of NOI approval when available). Correspondence for the NOI will be sent to this address.

Section III. Project/Site Information

Enter the official or legal name and complete street address, including city, state, zip code, and county or similar government subdivision of the project or site. If the project or site lacks a street address, indicate the general location of the site (e.g., Intersection of State Highways 61 and 34). Complete site information must be provided for permit coverage to be granted.

The applicant must also provide the latitude and longitude of the facility either in degrees, minutes, seconds; degrees, minutes, decimal; or decimal format. The latitude and longitude of your facility can be determined in several different ways, including through the use of global positioning system (GPS) receivers, U.S. Geological Survey (U.S.G.S.) topographic or quadrangle maps, and EPA's web-based siting tools, among others. Refer to *www.epa.gov/npdes/stormwater/cgp* for further guidance on the use of these methodologies. For consistency, EPA requests that measurements be taken from the approximate center of the construction site. Applicants must specify which method they used to determine latitude and longitude. If a U.S.G.S. topographic map is used, applicants are required to specify the scale of the map used.

Indicate whether the project is in Indian country, and if so, provide the name of the Reservation. If the project is in Indian Country Lands that are not part of a Reservation, indicate "not applicable" in the space provided.

Enter the estimated construction start and completion dates using four digits for the year (i.e., 05/27/1998). Enter the estimated area to be disturbed including but not limited to: grubbing, excavation, grading, and utilities and infrastructure installation. Indicate to the nearest quarter acre. Note: 1 acre = 43,560 sq. ft.

Section IV. SWPPP Information

Indicate whether or not the SWPPP was prepared in advance of filing the NOI form. Check the appropriate box for the location where the SWPPP may be viewed. Provide the name,

Notice of Intent (NOI) for Storm Water Discharges Associated with Construction Activity Under an NPDES General Permit

NPDES Form This Form Replaces Form 3510-9 (8/98) Form Approved OMB Nos. 2040-0188 and 2040-0211

fax number (optional), and e-mail address (optional) of the contact person if different than that listed in Section II of the NOI form.

Section V. Discharge Information

Enter the name(s) of receiving waterbodies to which the project's storm water will discharge. These should be the first bodies of water that the discharge will reach. (Note: If you discharge to more than one waterbody, please indicate all such waters in the space provided and attach a separate sheet if necessary.) For example, if the discharge leaves your site and travels through a roadside swale or a storm sewer and then enters a stream that flows to a river, the stream would be the receiving waterbody. Waters of the U.S. include lakes, streams, creeks, rivers, wetlands, impoundments, estuaries, bays, oceans, and other surface bodies of water within the confines of the U.S. and U.S. coastal waters. Waters of the U.S. do not include man-made structures created solely for the purpose of wastewater treatment. U.S. Geological Survey topographical maps may be used to make this determination. If the map does not provide a name, use a format such as "unnamed tributary to Cross Creek". If you discharge into a municipal separate storm sewer system (MS4), you must identify the waterbody into which that portion of the storm sewer discharges. That information should be readily available from the operator of the MS4.

Indicate whether your storm water discharges from construction activities will be consistent with the assumptions and requirements of applicable EPA approved or established TMDL(s). To answer this question, refer to *www.epa.gov/npdes/stormwater/cgp* for state- and regional-specific TMDL information related to the construction general permit. You may also have to contact your EPA regional office or state agency. If there are no applicable TMDLs or no related requirements, please check the "yes" box in the NOI form.

Section VI. Endangered Species Information

Indicate for which criterion (i.e., A, B, C, D, E, or F) of the permit the applicant is eligible with regard to protection of federally listed endangered and threatened species, and designated critical habitat. See Part 1.3.C.6 and Appendix C of the permit. If you select criterion F, provide the permit tracking number of the operator under which you are certifying eligibility. The permit tracking number is the number assigned to the operator by the Storm Water Notice Processing Center after EPA acceptance of a complete NOI.

Section VII. Certification Information

All applications, including NOIs, must be signed as follows:

For a corporation: By a responsible corporate officer. For the purpose of this Section, a responsible corporate officer means: (i) a president, secretary, treasurer, or vice-president of the corporation in charge of a principal business function, or any other person who performs similar policy- or decision-making functions for the corporation, or (ii) the manager of one or more manufacturing, production, or operating facilities, provided, the manager is authorized to make management decisions which govern the operation of the regulated facility including having the explicit or implicit duty of making major capital investment recommendations, and initiating and directing other comprehensive measures to assure long-term environmental compliance with environmental laws and regulations; the manager can ensure that the necessary systems are established or actions taken to gather complete and accurate information for permit application requirements; and where authority to sign documents has been assigned or delegated to the manager in accordance with corporate procedures.

For a partnership or sole proprietorship: By a general partner or the proprietor, respectively; or

For a municipality, state, federal, or other public agency: By either a principal executive officer or ranking elected official. For purposes of this Part, a principal executive officer of a federal agency includes (i) the chief executive officer of the agency, or (ii) a senior executive officer having responsibility for the overall operations of a principal geographic unit of the agency (e.g., Regional Administrator of EPA).

Include the name and title of the person signing the form and the date of signing. An unsigned or undated NOI form will not be considered eligible for permit coverage.

Paperwork Reduction Act Notice

Public reporting burden for this application is estimated to average 3.7 hours. This estimate includes time for reviewing instructions, searching existing data sources, gathering and maintaining the data needed, and completing and reviewing the collection of information. An agency may not conduct or sponsor, and a person is not required to respond to, a collection of information unless it displays a currently valid OMB control number. Send comments regarding the burden estimate, any other aspect of the collection of information, or suggestions for improving this form, including any suggestions which may increase or reduce this burden to: Chief, Information Policy Branch 2136, U.S. Environmental Protection, Agency, 1200 Pennsylvania Avenue, NW, Washington, D.C. 20460. Include the OMB control number on any correspondence. Do not send the completed form to this address.

APPENDIX U

RAIN ZONES OF THE UNITED STATES

This page intentionally left blank.

Figure U-1

Rain Zones of the United States

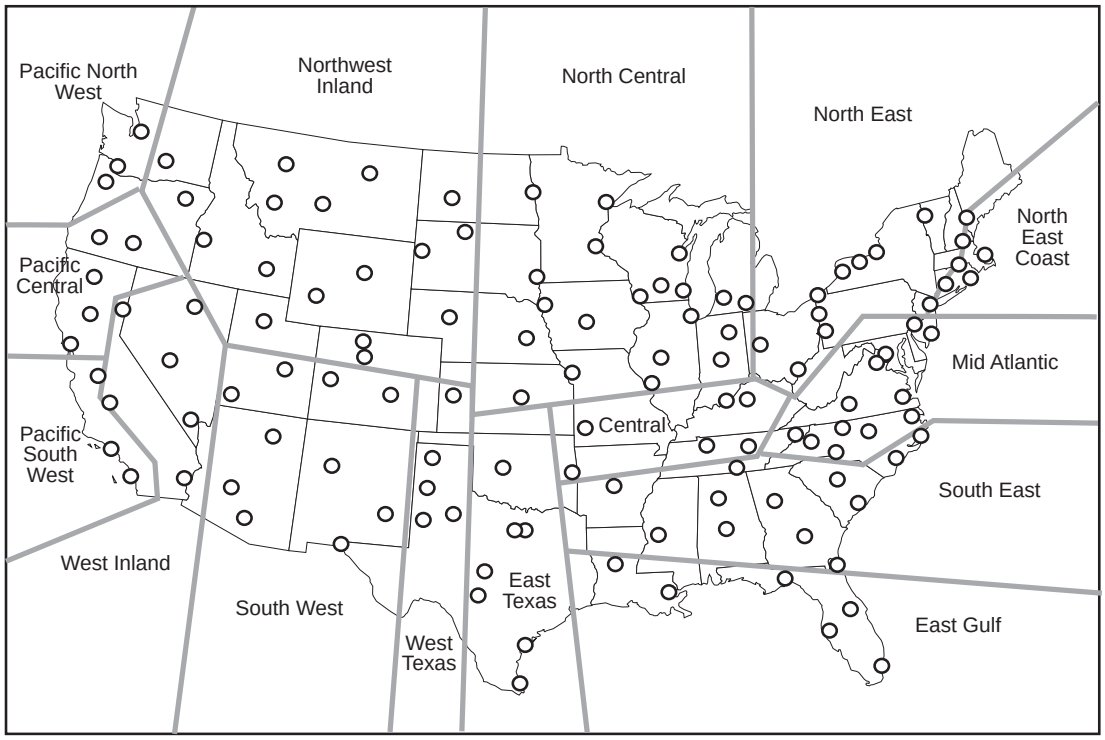

461B-14

Table U-1

Typical Values of Annual Storm Event Statistics for Rain Zones

Rain Zone	Annual Statistics				Independent Storm Event Statistics							
	No. of Storms		Precip		Duration		Intensity		Volume		DELTA	
	Avg	COV	Avg	COV	Avg	COV	Avg	COV	Avg	COV	Avg	COV
			(in)		(hrs)		(in/hr)		(in)		(hr)	
North East	70	0.13	34.6	0.18	11.2	0.81	0.067	1.23	0.5	0.95	126	0.94
North East-Coastal	63	0.12	41.4	0.21	11.7	0.77	0.071	1.05	0.6	1.03	140	0.87
Midatlantic	62	0.13	39.5	0.18	10.1	0.84	0.082	1.20	0.6	1.01	143	0.97
Central	66	0.14	41.9	0.19	9.2	0.85	0.097	1.09	0.6	1.00	133	0.99
North Central	55	0.16	29.8	0.22	9.5	0.83	0.067	1.20	0.5	1.01	167	1.17
Southeast	65	0.15	49.0	0.20	8.7	0.92	0.122	1.09	0.7	1.10	136	1.03
East Gulf	68	0.17	53.7	0.23	6.4	1.05	0.176	1.03	0.8	1.19	130	1.25
East Texas	41	0.22	31.2	0.29	8.0	0.97	0.137	1.08	0.7	1.16	213	1.26
West Texas	30	0.27	17.3	0.33	7.4	0.98	0.121	1.13	0.5	1.07	302	1.53
Southwest	20	0.30	7.4	0.37	7.6	0.88	0.079	1.16	0.3	0.88	473	1.46
West Inland	14	0.38	4.9	0.43	9.4	0.75	0.055	1.06	0.3	0.87	766	1.54
Pacific South	19	0.36	10.2	0.42	11.6	0.76	0.054	0.76	0.5	0.96	476	2.09
Northwest Inland	31	0.23	11.5	0.29	10.4	0.82	0.057	1.20	0.3	0.83	304	1.43
Pacific Central	32	0.25	18.4	0.33	13.7	0.80	0.048	0.85	0.5	1.05	265	2.00
Pacific Northwest	71	0.15	56.7	0.19	15.9	0.80	0.035	0.73	0.5	1.09	123	1.50

COV - Coefficient of Variation - Standard Deviation / Mean DELTA - Interval between storm midpoints

This page intentionally left blank.

APPENDIX V

TYPICAL "c" COEFFICIENTS

This page intentionally left blank.

TYPICAL "c" COEFFICIENTS FOR 5- TO 10-YEAR FREQUENCY DESIGN STORMS	
Description of Area	**Runoff Coefficients**
Business	
• Downtown areas	0.70-0.95
• Neighborhood areas	0.50-0.70
Residential	
• Single-family areas	0.30-0.50
• Multi-units (detached)	0.40-0.60
• Multi-units (attached)	0.60-0.75
Residential (suburban)	0.25-0.40
Apartment dwelling areas	0.50-0.70
Industrial	
• Light areas	0.50-0.80
• Heavy areas	0.60-0.90
Parks and cemeteries	0.10-0.25
Playgrounds	0.20-0.35
Railroad yard areas	0.20-0.40
Unimproved areas	0.10-0.30
Streets	
• Asphalt	0.70-0.95
• Concrete	0.80-0.95
• Brick	0.70-0.85
Drives and walks	0.75-0.85
Roofs	0.75-0.95
Lawns—course textured soil (greater than 85 percent sand)	
• Slope: Flat (2 percent)	0.05-0.10
Average (2-7 percent)	0.10-0.15
Steep (7 percent)	0.15-0.20
Lawns—fine textured soil (greater than 40 percent clay)	
• Slope: Flat (2 percent)	0.13-0.17
Average (2-7 percent)	0.18-0.22
Steep (7 percent)	0.25-0.35
Source: *Design and Construction of Sanitary and Storm Sewers*, with permission from the publisher, American Society of Civil Engineers, *Manual of Practice*, page 37, New York, 1960.	

This page intentionally left blank.

APPENDIX W

NOTICE OF TERMINATION FOR STORMWATER

This page intentionally left blank.

THIS FORM REPLACES FORM 3517-7 (8-98)
Refer to the Following Page for Instructions

Form Approved OMB Nos. 2040-0086 and 2040-0211

NPDES FORM

United States Environmental Protection Agency
Washington, DC 20460

Notice of Termination (NOT) of Coverage Under an NPDES General Permit for Storm Water Discharges Associated with Construction Activity

Submission of this Notice of Termination constitutes notice that the party identified in Section II of this form is no longer authorized to discharge storm water associated with construction activity under the NPDES program from the site identified in Section III of this form. All necessary information must be included on this form. Refer to the instructions at the end of this form.

I. Permit Information

NPDES Storm Water General Permit Tracking Number:

Reason for Termination (Check only one):

- ☐ Final stabilization has been achieved on all portions of the site for which you are responsible.
- ☐ Another operator has assumed control, according to Appendix G, Section 11.C of the CGP, over all areas of the site that have not been finally stabilized.
- ☐ Coverage under an alternative NPDES permit has been obtained.
- ☐ For residential construction only, temporary stabilization has been completed and the residence has been transferred to the homeowner.

II. Operator Information

Name:

IRS Employer Identification Number (EIN): -

Mailing Address:

Street:

City: State: Zip Code: -

Phone: - - Fax (optional): - -

E-mail (optional):

III. Project/Site Information

Project/Site Name:

Project Street/Location:

City: State: Zip Code: -

County or similar government subdivision: _____

IV. Certification Information

I certify under penalty of law that this document and all attachments were prepared under my direction or supervision in accordance with a system designed to assure that qualified personnel properly gathered and evaluated the information submitted. Based on my inquiry of the person or persons who manage the system, or those persons directly responsible for gathering the information, the information submitted is, to the best of my knowledge and belief, true, accurate, and complete. I am aware that there are significant penalties for submitting false information, including the possibility of fine and imprisonment for knowing violations.

Print Name: _____

Print Title: _____

Signature: _____

Date: _____

Instructions for Completing EPA Form 3510-13

Notice of Termination (NOT) of Coverage Under an NPDES General Permit for Storm Water Discharges Associated with Construction Activity

NPDES Form This Form Replaces Form 3517-7 (8-98) Form Approved OMB Nos. 2040-0086 and 2040-0211

Who May File an NOT Form

Permittees who are presently covered under the EPA-issued National Pollutant Discharge Elimination System (NPDES) General Permit for Storm Water Discharges Associated with Construction Activity may submit an NOT form when final stabilization has been achieved on all portions of the site for which you are responsible; another operator has assumed control in accordance with Appendix G, Section 11.C of the General Permit over all areas of the site that have not been finally stabilized; coverage under an alternative NPDES permit has been obtained; or for residential construction only, temporary stabilization has been completed and the residence has been transferred to the homeowner.

"Final stabilization" means that all soil disturbing activities at the site have been completed and that a uniform perennial vegetative cover with a density of at least 70% of the native background vegetative cover for the area has been established on all unpaved areas and areas not covered by permanent structures, or equivalent permanent stabilization measures (such as the use of riprap, gabions, or geotextiles) have been employed. See "final stabilization" definition in Appendix A of the Construction General Permit for further guidance where background native vegetation covers less than 100 percent of the ground, in arid or semi-arid areas, for individual lots in residential construction, and for construction projects on land used for agricultural purposes.

Completing the Form

Type or print, using uppercase letters, in the appropriate areas only. Please place each character between the marks. Abbreviate if necessary to stay within the number of characters allowed for each item. Use only one space for breaks between words, but not for punctuation marks unless they are needed to clarify your response. If you have any questions about this form, refer to *www.epa.gov/npdes/stormwater/cgp* or telephone the Storm Water Notice Processing Center at (866) 352-7755. Please submit original document with signature in ink - do not send a photocopied signature.

Section I. Permit Number

Enter the existing NPDES Storm Water General Permit Tracking Number assigned to the project by EPA's Storm Water Notice Processing Center. If you do not know the permit tracking number, refer to *www.epa.gov/npdes/stormwater/cgp* or contact the Storm Water Notice Processing Center at (866) 352-7755.

Indicate your reason for submitting this Notice of Termination by checking the appropriate box. Check only one:

Final stabilization has been achieved on all portions of the site for which you are responsible.

Another operator has assumed control according to Appendix G, Section 11.C over all areas of the site that have not been finally stabilized.

Coverage under an alternative NPDES permit has been obtained.

For residential construction only, if temporary stabilization has been completed and the residence has been transferred to the homeowner.

Section II. Operator Information

Provide the legal name of the person, firm, public organization, or any other entity that operates the project described in this application and is covered by the permit tracking number identified in Section I. The operator of the project is the legal entity that controls the site operation, rather than the site manager. Provide the employer identification number (EIN from the Internal Revenue Service; IRS). If the applicant does not have an EIN enter "NA" in the space provided. Enter the complete mailing address and telephone number of the operator. *Optional:* enter the fax number and e-mail address of the operator.

Section III. Project/Site Information

Enter the official or legal name and complete street address, including city, state, zip code, and county or similar government subdivision of the project or site. If the project or site lacks a street address, indicate the general location of the site (e.g., Intersection of State Highways 61 and 34). Complete site information must be provided for termination of permit coverage to be valid.

Section IV. Certification Information

All applications, including NOIs, must be signed as follows:

For a corporation: By a responsible corporate officer. For the purpose of this Part, a responsible corporate officer means: (i) a president, secretary, treasurer, or vice-president of the corporation in charge of a principal business function, or any other person who performs similar policy- or decision-making functions for the corporation, or (ii) the manager of one or more manufacturing, production, or operating facilities, provided, the manager is authorized to make management decisions which govern the operation of the regulated facility including having the explicit or implicit duty of making major capital investment recommendations, and initiating and directing other comprehensive measures to assure long-term environmental compliance with environmental laws and regulations; the manager can ensure that the necessary systems are established or actions taken to gather complete and accurate information for permit application requirements; and where authority to sign documents has been assigned or delegated to the manager in accordance with corporate procedures.

For a partnership or sole proprietorship: By a general partner or the proprietor, respectively; or

For a municipality, state, federal, or other public agency: By either a principal executive officer or ranking elected official. For purposes of this Part, a principal executive officer of a federal agency includes (i) the chief executive officer of the agency, or (ii) a senior executive officer having responsibility for the overall operations of a principal geographic unit of the agency (e.g., Regional Administrator of EPA).

Include the name and title of the person signing the form and the date of signing. An unsigned or undated NOT form will not be considered valid termination of permit coverage.

Paperwork Reduction Act Notice

Public reporting burden for this application is estimated to average 0.5 hours per notice, including time for reviewing instructions, searching existing data sources, gathering and maintaining the data needed, and completing and reviewing the collection of information. An agency may not conduct or sponsor, and a person is not required to respond to, a collection of information unless it displays a currently valid OMB control number. Send comments regarding the burden estimate, any other aspect of the collection of information, or suggestions for improving this form including any suggestions which may increase or reduce this burden to: Chief, Information Policy Branch, 2136, U.S. Environmental Protection Agency, 1200 Pennsylvania Avenue, NW, Washington, DC 20460. Include the OMB number on any correspondence. Do not sent the completed form to this address.

APPENDIX X

NO EXPOSURE CERTIFICATION FORM

This page intentionally left blank.

NPDES FORM 3510-11

United States Environmental Protection Agency
Washington, DC 20460

Form Approved
OMB No. 2040-0211

NO EXPOSURE CERTIFICATION for Exclusion from NPDES Storm Water Permitting

Submission of this No Exposure Certification constitutes notice that the entity identified in Section A does not require permit authorization for its storm water discharges associated with industrial activity in the State identified in Section B under EPA's Storm Water Multi-Sector General Permit due to the existence of a condition of no exposure.

A condition of no exposure exists at an industrial facility when all industrial materials and activities are protected by a storm resistant shelter to prevent exposure to rain, snow, snowmelt, and/or runoff. Industrial materials or activities include, but are not limited to, material handling equipment or activities, industrial machinery, raw materials, intermediate products, by-products, final products, or waste products. Material handling activities include the storage, loading and unloading, transportation, or conveyance of any raw material, intermediate product, final product or waste product. A storm resistant shelter is not required for the following industrial materials and activities:

- drums, barrels, tanks, and similar containers that are tightly sealed, provided those containers are not deteriorated and do not leak. "Sealed" means banded or otherwise secured and without operational taps or valves;
- adequately maintained vehicles used in material handling; and
- final products, other than products that would be mobilized in storm water discharges (e.g., rock salt).

A No Exposure Certification must be provided for each facility qualifying for the no exposure exclusion. In addition, the exclusion from NPDES permitting is available on a facility-wide basis only, not for individual outfalls. If any industrial activities or materials are or will be exposed to precipitation, the facility is not eligible for the no exposure exclusion.

By signing and submitting this No Exposure Certification form, the entity in Section A is certifying that a condition of no exposure exists at its facility or site, and is obligated to comply with the terms and conditions of 40 CFR 122.26(g).

ALL INFORMATION MUST BE PROVIDED ON THIS FORM.

Detailed instructions for completing this form and obtaining the no exposure exclusion are provided on pages 3 and 4.

A. Facility Operator Information

1. Name: _____ 2. Phone: _____
3. Mailing Address: a. Street: _____
   b. City: _____ c. State: ____ d. Zip Code: _____–____

B. Facility/Site Location Information

1. Facility Name: _____
2. a. Street Address: _____
   b. City: _____ c. County: _____
   d. State: ____ e. Zip Code: _____–____
3. Is the facility located on Indian Lands? Yes ☐ No ☐
4. Is this a Federal facility? Yes ☐ No ☐
5. a. Latitude: ___ ° ___ ' ___ " b. Longitude: ___ ° ___ ' ___ "
6. a. Was the facility or site previously covered under an NPDES storm water permit? Yes ☐ No ☐
   b. If yes, enter NPDES permit number: _____
7. SIC/Activity Codes: Primary: ____ Secondary (if applicable): ____
8. Total size of site associated with industrial activity: _____ acres
9. a. Have you paved or roofed over a formerly exposed, pervious area in order to qualify for the no exposure exclusion? Yes ☐ No ☐
   b. If yes, please indicate approximately how much area was paved or roofed over. Completing this question does not disqualify you for the no exposure exclusion. However, your permitting authority may use this information in considering whether storm water discharges from your site are likely to have an adverse impact on water quality, in which case you could be required to obtain permit coverage.

   Less than one acre ☐ One to five acres ☐ More than five acres ☐

NO EXPOSURE CERTIFICATION for Exclusion from NPDES Storm Water Permitting

Form Approved
OMB No. 2040-0211

C. Exposure Checklist

Are any of the following materials or activities exposed to precipitation, now or in the foreseeable future? (Please check either "Yes" or "No" in the appropriate box.) **If you answer "Yes" to any of these questions (1) through (11), you are not eligible for the no exposure exclusion.**

	Yes	No
1. Using, storing or cleaning industrial machinery or equipment, and areas where residuals from using, storing or cleaning industrial machinery or equipment remain and are exposed to storm water	☐	☐
2. Materials or residuals on the ground or in storm water inlets from spills/leaks	☐	☐
3. Materials or products from past industrial activity	☐	☐
4. Material handling equipment (except adequately maintained vehicles)	☐	☐
5. Materials or products during loading/unloading or transporting activities	☐	☐
6. Materials or products stored outdoors (except final products intended for outside use [e.g., new cars] where exposure to storm water does not result in the discharge of pollutants)	☐	☐
7. Materials contained in open, deteriorated or leaking storage drums, barrels, tanks, and similar containers	☐	☐
8. Materials or products handled/stored on roads or railways owned or maintained by the discharger	☐	☐
9. Waste material (except waste in covered, non-leaking containers [e.g., dumpsters])	☐	☐
10. Application or disposal of process wastewater (unless otherwise permitted)	☐	☐
11. Particulate matter or visible deposits of residuals from roof stacks and/or vents not otherwise regulated (i.e., under an air quality control permit) and evident in the storm water outflow	☐	☐

D. Certification Statement

I certify under penalty of law that I have read and understand the eligibility requirements for claiming a condition of "no exposure" and obtaining an exclusion from NPDES storm water permitting.

I certify under penalty of law that there are no discharges of storm water contaminated by exposure to industrial activities or materials from the industrial facility or site identified in this document (except as allowed under 40 CFR 122.26(g)(2)).

I understand that I am obligated to submit a no exposure certification form once every five years to the NPDES permitting authority and, if requested, to the operator of the local municipal separate storm sewer system (MS4) into which the facility discharges (where applicable). I understand that I must allow the NPDES permitting authority, or MS4 operator where the discharge is into the local MS4, to perform inspections to confirm the condition of no exposure and to make such inspection reports publicly available upon request. I understand that I must obtain coverage under an NPDES permit prior to any point source discharge of storm water from the facility.

Additionally, I certify under penalty of law that this document and all attachments were prepared under my direction or supervision in accordance with a system designed to assure that qualified personnel properly gathered and evaluated the information submitted. Based on my inquiry of the person or persons who manage the system, or those persons directly responsible for gathering the information, the information submitted is to the best of my knowledge and belief true, accurate and complete. I am aware that there are significant penalties for submitting false information, including the possibility of fine and imprisonment for knowing violations.

Print Name: _____

Print Title: _____

Signature: _____

Date: _____

Instructions for the NO EXPOSURE CERTIFICATION for Exclusion from NPDES Storm Water Permitting

Form Approved
OMB No. 2040-0211

Who May File a No Exposure Certification

Federal law at 40 CFR Part 122.26 prohibits point source discharges of storm water associated with industrial activity to waters of the U.S. without a National Pollutant Discharge Elimination System (NPDES) permit. However, NPDES permit coverage is not required for discharges of storm water associated with industrial activities identified at 40 CFR 122.26(b)(14)(i)-(ix) and (xi) if the discharger can certify that a condition of "no exposure" exists at the industrial facility or site.

Storm water discharges from construction activities identified in 40 CFR 122.26(b)(14)(x) and (b)(15) are not eligible for the no exposure exclusion.

Obtaining and Maintaining the No Exposure Exclusion

This form is used to certify that a condition of no exposure exists at the industrial facility or site described herein. This certification is only applicable in jurisdictions where EPA is the NPDES permitting authority and must be re-submitted at least once every five years.

The industrial facility operator must maintain a condition of no exposure at its facility or site in order for the no exposure exclusion to remain applicable. If conditions change resulting in the exposure of materials and activities to storm water, the facility operator must obtain coverage under an NPDES storm water permit immediately.

Where to File the No Exposure Certification Form

No Exposure Forms sent regular mail:

SW No Exposure Certification (4203M)
USEPA
1200 Pennsylvania Avenue, NW
Washington, D.C. 20460

Forms sent overnight/express:

SW No Exposure Certification
US EPA East Building, Rm. 7329
1201 Constitution Avenue, NW
Washington, D.C. 20004
(202) 564-9537

Completing the Form

You must type or print, using uppercase letters, in appropriate areas only. Enter only one character per space (i.e., between the marks). Abbreviate if necessary to stay within the number of characters allowed for each item. Use one space for breaks between words. One form must be completed for each facility or site for which you are seeking to certify a condition of no exposure. Additional guidance on completing this form can be accessed through EPA's web site at www.epa.gov/owm/sw. Please make sure you have addressed all applicable questions and have made a photocopy for your records before sending the completed form to the above address.

Section A. Facility Operator Information

1. Provide the legal name of the person, firm, public organization, or any other entity that operates the facility or site described in this certification. The name of the operator may or may not be the same as the name of the facility. The operator is the legal entity that controls the facility's operation, rather than the plant or site manager.

2. Provide the telephone number of the facility operator.

3. Provide the mailing address of the operator (P.O. Box numbers may be used). Include the city, state, and zip code. All correspondence will be sent to this address.

Section B. Facility/Site Location Information

1. Enter the official or legal name of the facility or site.

2. Enter the complete street address (if no street address exists, provide a geographic description [e.g., Intersection of Routes 9 and 55]), city, county, state, and zip code. Do not use a P.O. Box number.

3. Indicate whether the facility is located on Indian Lands.

4. Indicate whether the industrial facility is operated by a department or agency of the Federal Government (see also Section 313 of the Clean Water Act).

5. Enter the latitude and longitude of the approximate center of the facility or site in degrees/minutes/seconds. Latitude and longitude can be obtained from United States Geological Survey (USGS) quadrangle or topographic maps, by calling 1-(888) ASK-USGS, or by accessing EPA's web site at http://www.epa.gov/owm/sw/industry/index.htm and selecting Latitude and Longitude Finders under the Resources/Permit section.

   Latitude and longitude for a facility in decimal form must be converted to degrees (°), minutes ('), and seconds (") for proper entry on the certification form. To convert decimal latitude or longitude to degrees/minutes/seconds, follow the steps in the following example.

   Example: Convert decimal latitude 45.1234567 to degrees (°), minutes ('), and seconds (").

   a) The numbers to the left of the decimal point are the degrees: 45°.

   b) To obtain minutes, multiply the first four numbers to the right of the decimal point by 0.006: 1234 x 0.006 = 7.404.

   c) The numbers to the left of the decimal point in the result obtained in (b) are the minutes: 7'.

   d) To obtain seconds, multiply the remaining three numbers to the right of the decimal from the result obtained in (b) by 0.06: 404 x 0.06 = 24.24. Since the numbers to the right of the decimal point are not used, the result is 24".

   e) The conversion for 45.1234567 = 45° 7' 24".

6. Indicate whether the facility was previously covered under an NPDES storm water permit. If so, include the permit number.

7. Enter the 4-digit SIC code which identifies the facility's primary activity, and second 4-digit SIC code identifying the facility's secondary activity, if applicable. SIC codes can be obtained from the Standard Industrial Classification Manual, 1987.

8. Enter the total size of the site associated with industrial activity in acres. Acreage may be determined by dividing square footage by 43,560, as demonstrated in the following example.

   Example: Convert 54,450 ft^2 to acres

   Divide 54,450 ft^2 by 43,560 square feet per acre:
   54,450 $ft^2 \div 43{,}560\ ft^2$/acre = 1.25 acres.

9. Check "Yes" or "No" as appropriate to indicate whether you have paved or roofed over a formerly exposed, pervious area (i.e., lawn, meadow, dirt or gravel road/parking lot) in order to qualify for no exposure. If yes, also indicate approximately how much area was paved or roofed over and is now impervious area.

Instructions for the NO EXPOSURE CERTIFICATION for Exclusion from NPDES Storm Water Permitting

Form Approved
OMB No. 2040-0211

Section C. Exposure Checklist

Check "Yes" or "No" as appropriate to describe the exposure conditions at your facility. If you answer "Yes" to **ANY** of the questions (1) through (11) in this section, a potential for exposure exists at your site and you cannot certify to a condition of no exposure. You must obtain (or already have) coverage under an NPDES storm water permit. After obtaining permit coverage, you can institute modifications to eliminate the potential for a discharge of storm water exposed to industrial activity, and then certify to a condition of no exposure.

Section D. Certification Statement

Federal statutes provide for severe penalties for submitting false information on this application form. Federal regulations require this application to be signed as follows:

For a corporation: by a responsible corporate officer, which means:

(i) president, secretary, treasurer, or vice-president of the corporation in charge of a principal business function, or any other person who performs similar policy or decision making functions for the corporation, or

(ii) the manager of one or more manufacturing, production, or operating facilities, provided the manager is authorized to make management decisions which govern the operation of the regulated facility including having the explicit or implicit duty of making major capital investment recommendations, and initiating and directing other comprehensive measures to assure long term environmental compliance with environmental laws and regulations; the manager can ensure that the necessary systems are established or actions taken to gather complete and accurate information for permit application requirements; and where authority to sign documents has been assigned or delegated to the manager in accordance with corporate procedures;

For a partnership or sole proprietorship: by a general partner or the proprietor; or

For a municipal, State, Federal, or other public facility: by either a principal executive or ranking elected official.

Paperwork Reduction Act Notice

Public reporting burden for this certification is estimated to average 1.0 hour per certification, including time for reviewing instructions, searching existing data sources, gathering and maintaining the data needed, and completing and reviewing the collection of information. Burden means the total time, effort, or financial resources expended by persons to generate, maintain, retain, or disclose to provide information to or for a Federal agency. This includes the time needed to review instructions; develop, acquire, install, and utilize technology and systems for the purposes of collecting, validating, and verifying information, processing and maintaining information, and disclosing and providing information; adjust the existing ways to comply with any previously applicable instructions and requirements; train personnel to be able to respond to a collection of information; search data sources; complete and review the collection of information; and transmit or otherwise disclose the information. An agency may not conduct or sponsor, and a person is not required to respond to, a collection of information unless it displays a currently valid OMB control number. Send comments regarding the burden estimate, any other aspect of the collection of information, or suggestions for improving this form, including any suggestions which may increase or reduce this burden to: Director, OPPE Regulatory Information Division (2137), USEPA, 401 M Street, SW, Washington, D.C. 20460. Include the OMB control number of this form on any correspondence. Do not send the completed No Exposure Certification form to this address.

APPENDIX Y

MEDIA-SPECIFIC INSPECTION COMPONENTS

EXCERPTED (AND UPDATED) FROM EPA'S *MULTIMEDIA INVESTIGATION MANUAL*

This page intentionally left blank.

The information in this appendix was excerpted from NEIC's *Multimedia Investigation Manual*

The information presented in this appendix includes many significant tasks for several media-specific inspection areas. Media discussed include hazardous waste, air, drinking water, toxic substances, and pesticides; emergency planning/community right-to-know and the Superfund program are also discussed.

A. Resource Conservation and Recovery Act (RCRA)

Subtitle C Hazardous Wastes

Evaluating Compliance

Under RCRA Subtitle C, hazardous wastes are subject to extensive regulations on generation, transportation, storage, treatment, and disposal. A manifest system tracks shipments of hazardous wastes from the generator through ultimate disposal. This "cradle to grave" management is implemented through regulations and permits.

In determining the facility status under RCRA, the investigator must decide whether the facility is a generator, transporter, and/or Treatment, Storage, and Disposal Facility (TSDF), and whether the facility is permitted or has interim status. Generally, EPA Regional and State offices maintain files for the facility to be inspected. Information may include:

- A list of wastes that are treated, stored, and disposed and how each is managed (for TSDFs)
- A list of hazardous wastes generated, their origins, and accumulation areas (for generators)
- Biennial, annual, or other reports required by RCRA and submitted to the regulatory agencies; these include any required monitoring reports
- A detailed map or plot plan showing the facility layout and location(s) of waste management areas
- The facility RCRA Notification Form (Form 8700-12)
- The RCRA Part A Permit Application (for TSDFs)
- The RCRA Part B Permit application (for TSDFs, if applicable)
- The RCRA permit (for TSDFs, if applicable)
- Notifications and/or certifications for land disposal restrictions (for generators).

Generators

Hazardous waste generators are regulated under 40 *CFR* Parts 262 and 268. These regulations contain requirements for:

- Obtaining an Environmental Protection Agency (EPA) Identification Number
- Determining whether a waste is hazardous
- Managing wastes before shipment
- Accumulating and storing hazardous wastes

- Manifesting waste shipments
- Recordkeeping and reporting
- Restricting wastes from land disposal (also regulated under Part 268).

The generator regulations vary, depending upon the volume of hazardous wastes generated with fewer requirements for smaller generators. Large Quantity Generators (LQGs) generate greater than 1000 kg of hazardous waste/month, Small Quantity Generators (SQGs) generate less than 1000kg/month but more than 100 kg/month, while Conditionally Exempt Small Quantity Generators (CESQGs) generate less than 100 kg/month. The investigator must determine which regulations apply. Additionally, the investigator should do the following:

- Verify that the generator has an EPA Identification Number that is used on all required documentation (e.g., reports, manifests, etc.).

- Confirm that the volume of hazardous wastes generated is consistent with reported volumes. Examine the processes generating the wastes to assure that all generated hazardous wastes have been identified. Look for improper mixing or dilution.

- Ascertain how the generator determines/documents that a waste is hazardous. Check to see wastes are properly classified. Collect samples, if necessary.

- Determine whether pre-transport requirements are satisfied, including those for packaging, container condition, labeling and marking, and placarding.

- Determine the length of time that hazardous wastes are being stored or accumulated. Storage or accumulation for more than 90 days requires a permit (facilities that generate less than 1000 kg/month of hazardous waste are allowed to store/accumulate for up to 180 days without a permit). Generators storing for less than 90 days must comply with requirements outlined in 40 *CFR* 262.34.

- Verify RCRA reports and supporting documentation for accuracy, including inspection logs, biennial reports, exception reports, and manifests (with land disposal restriction notifications and/or certifications).

- Watch for accumulation areas which are in use but have not been identified by the generator. Note: Some authorized State regulations do not have provisions for "satellite storage" accumulation areas.

- Determine whether a generator has the required contingency plan and emergency procedures, whether the plan is complete, and if the generator follows the plan/ procedures.

- Determine whether hazardous waste storage areas comply with applicable requirements.

- Facilities with their own vehicle maintenance garage should be evaluated to assure that wastes such as used oil, anti-freeze, solvents, and paints are disposed of properly.

Transporters Hazardous waste transporters (e.g., by truck, ship, or rail) are regulated under 40 *CFR* Part 263, which contains requirements for:

- Obtaining an EPA Identification Number
- Manifesting hazardous waste shipments
- Recordkeeping and reporting
- Sending bulk shipments (by water, rail).

Storage regulations apply if accumulation times at transfer stations are exceeded. Transporters importing hazardous wastes, or mixing hazardous wastes of different Department of Transportation (DOT) shipping descriptions in the same container, are classified as generators and must comply with 40 *CFR* Parts 262 and 268. Investigators evaluating transporter compliance should do the following:

- Verify that the transporter has an EPA identification number that is used on all required documentation (e.g., manifests).

- Determine whether hazardous waste containers stored at a transfer facility meet DOT pre-transport requirements.

- Verify whether the transporter is maintaining recordkeeping and reporting documents, including manifests, shipping papers (as required), and discharge reports. All required documents should be both present and complete.

Treatment, Storage, and Disposal Facilities

Permitted and interim status TSDFs are regulated under 40 *CFR* Parts 264 and 265, respectively. (40 *CFR* Part 264 applies only if the facility has a RCRA permit (i.e., a permitted facility); 40 *CFR* Part 265 applies if the facility does not have a RCRA permit (i.e., an interim status facility). These requirements include three categories of regulations consisting of administrative requirements, general standards, and specific standards. The investigator should do the following activities to determine compliance with Subparts A through E:

- Verify that the TSDF has an EPA Identification Number that is used on all required documentation.

- Determine what hazardous wastes are accepted at the facility, how they are verified, and how they are managed.

- Compare wastes managed at the facility with those listed in the Hazardous Waste Activity Notification (Form 8700-12), the Parts A and B permit applications, and the permit.

- Verify that the TSDF has and is following a waste analysis plan kept at the facility; inspect the plan contents.

- Identify and inspect security measures and equipment.

- Review inspection logs to ensure they are present and complete. Note problems and corrective measures.

- Review training documentation to ascertain that required training has been given to employees.

- Inspect waste management areas to determine whether reactive, ignitable, and incompatible wastes are handled pursuant to requirements.

- Review preparedness and prevention practices and inspect related equipment.

- Review contingency plans; examine emergency equipment and documented arrangements with local authorities.

- Examine the waste tracking system and associated recordkeeping/reporting systems. Required documentation includes manifests and biennial reports, and may include unmanifested waste reports and spill/release reports. Relevant documents may include on-site waste tracking forms.

- Verify that the operating record is complete according to 40 *CFR* 264.73 or 265.73.

The investigator can determine compliance with standards in Subparts F through H by doing the following:

- For permitted facilities, verify compliance with permit standards with respect to ground water monitoring, releases from solid waste management units, closure/post-closure, and financial requirements.

- For interim status facilities required to monitor ground water, determine what kind of monitoring program applies.

- Depending on the type of investigation, examine the following items to determine compliance:

  - Characterization of site hydrogeology

  - Sampling and analytical records

  - Statistical methods used to compare analytical data

  - Analytical methods

  - Compliance with reporting requirements and schedules

  - Sampling and analysis plan (for content, completeness, and if it is being followed)

  - Conditions, maintenance, and operation of monitoring equipment, including wellheads, field instruments, and sampling materials

  - Construction/design of monitoring system

  - Assessment monitoring outline and/or plan

  - Corrective action plan for permitted facilities and for interim status facilities under 3008(h) enforcement actions.

- For waste management units undergoing closure, review the closure plan (including amendments and modifications), plan approval, closure schedule, and facility and

regulatory certification. Examine response actions to any release of hazardous waste constituents from a closed or closing regulated unit.

- For waste management units in post closure care, inspect security measures, ground water monitoring and reporting, and the maintenance and monitoring of waste containment systems.

- Verify that the owner/operator has demonstrated financial assurance regarding closure.

Specific Hazardous Waste Management Units

The technical standards in 40 *CFR* Part 264 (Subparts I through O and Subpart X) and 40 *CFR* Part 265 (Subparts I through R) govern specific hazardous waste management units used for storage, disposal, or treatment (e.g., tanks, landfills, incinerators). Standards for chemical, physical, and biological treatment at permitted facilities under 40 *CFR* Part 264 have been incorporated under Miscellaneous Units, Subpart X. The investigator should do the following:

- Identify all hazardous waste management areas and the activity in each area; compare the areas identified in the field with those listed the permit or permit application, as appropriate. Investigate inconsistencies between actual practice and the information submitted to regulatory agencies.

- Verify that the owner/operator is complying with applicable design, installation, and integrity standards; field-check the design, condition, and operation of waste management areas and equipment.

- Determine how incompatible wastes and ignitable or reactive wastes are managed.

- Verify that the owner/operator is conducting self-inspections where and when required; determine what the inspections include.

- Identify and inspect required containment facilities for condition and capacity; identify lead detection facilities.

- Determine whether hazardous waste releases have occurred and how the owner/operator responds to leaks and spills.

- Verify that the owner/operator is complying with additional waste analysis and trial test requirements, where applicable.

- Check the closure/post-closure procedures for specific waste management units (surface impoundments, waste piles, etc.) for regulatory compliance.

- For landfills, determine how the owner/operator manages bulk and contained liquids.

- Field-check security and access to waste management units.

- Determine the facility monitoring requirements (for air emissions, ground water, leak detection, instrumentation, equipment, etc.) and inspect monitoring facilities and records.

Land Treatment Facilities

When inspecting land treatment facilities, the investigator should also review the following items:

- Soil monitoring methods and analytical data.
- Comparisons between soil monitoring data and background concentrations of constituents in untreated soils to detect migration of hazardous wastes.
- Waste analyses done to determine toxicity, the concentrations of hazardous waste constituents, and, if food-chain crops are grown on the land, the concentrations of arsenic, cadmium, lead, and mercury in the waste(s). The concentrations must be such that hazardous waste constituents can be degraded, transformed, or immobilized by treatment.
- Runon and runoff management systems.

Incinerators

When evaluating compliance of interim status incinerators, the investigator also should review and/or inspect the following items:

- Waste analyses done to enable the owner/operator to establish steady-state operating conditions and to determine the pollutants that might be emitted.
- General procedures for operating the incinerator during start-up and shut-down.
- Operation of equipment used for monitoring combustion and emissions control, monitoring schedules, and data output.
- The incinerator and associated equipment.

For permitted incinerators, the investigator must evaluate the incinerator operation against specific permit requirements for waste analysis, performance standards, operating requirements, monitoring, and inspections. The investigator also should do the following:

- Verify that the incinerator burns only wastes specified in the permit
- Verify methods to control fugitive emissions
- Determine waste management practices for burn residue and ash.

Thermal Treatment Facilities

The investigator evaluating compliance of thermal treatment facilities in interim status also should review the following items:

- General operating requirements, to verify whether steady-state operating conditions are achieved, as required.

- Waste analysis records, to ensure that (a) the wastes are suitable for thermal treatment and (b) the required analyses in 40 *CFR* Part 265.375 have been performed.

Thermal treatment facilities permitted under 40 *CFR* Part 264 Subpart X will have specific permit requirements.

Biological Treatment Facilities

The investigator evaluating compliance of chemical, physical, and biological treatment facilities in interim status also should do the following:

- Determine the general operating procedures.
- Review the waste analysis records and methods to determine whether the procedures are sufficient to comply with 40 *CFR* 265.13.

- Review trial treatment test methods and records to determine whether the selected treatment method is appropriate for the particular waste.

- Examine procedures for treating ignitable, reactive, and incompatible wastes for compliance with Subpart Q requirements.

Chemical, physical, and biological treatment facilities permitted under Subpart X will have specific permit requirements.

Air Emission Standards

Owners/operators of TSDFs and generators with 90-day unites must comply with air emission standards contained in Subparts AA, BB, and CC of 40 *CFR* Parts 264 and 265. Subparts AA and BB establish standards for equipment containing or contacting hazardous wastes with organic concentrations of at least 10 percent. This equipment includes:

- Process vents
- Pumps in light liquid service
- Compressors
- Sampling connecting systems
- Open-ended valves or lines
- Valves in gas/vapor service or in light liquid service
- Pumps and valves in heavy liquid service, pressure relief devices in light liquid or heavy liquid service, and flanges and other connections.

Total organic emissions from process vents must be reduced below 1.4 kg/hr and 2.8 mg/yr. The other equipment types above must be marked and monitored routinely to detect leaks. Repairs must be initiated within 15 days of discovering the leak.

Subpart CC establishes standards for units managing hazardous wastes with organic concentrations of greater than 500 ppmw at the point of waste origination. The following types of units must be controlled:

- Tanks
- Containers
- Surface impoundments
- Miscellaneous Subpart X units

The facility operating record should contain information documenting compliance with the air emission standards. A complete list of required information is in 40 *CFR* Parts 264.1035, 264.1064, 265.1035, and 265.1064. Permitted facilities must submit semiannual reports to the Regional Administrator outlining which valves and compressors were not fixed during the preceding 6 months. The investigator can do the following things:

- Visually inspect the equipment for marking.

- Review documentation in the operating record and cross-check this information with that submitted to the Regional Administrator in semiannual reports.

Land Disposal Restrictions

Land Disposal Restrictions (LDR) in 40 *CFR* Part 268 prohibit land disposal of hazardous wastes unless the waste meets applicable treatment standards as listed in 40 *CFR* 268.40-43. The treatment standards are expressed as (1) contaminant concentrations in the extract or total waste or (2) specified technologies.

Notifications and certifications comprise the majority of required LDR documentation. Notifications tell the treatment or storage facility the appropriate treatment standards and any prohibition levels that apply to the waste. Certifications are signed statements telling the treatment or storage facility that the waste already meets the applicable treatment standards and prohibition levels.

Investigators evaluating hazardous waste generators for LDR compliance should do the following:

- Determine whether the generator produces restricted wastes; review how/if the generator determines a waste is restricted.

- Review documentation/data used to support the determination that a waste is restricted, based solely on knowledge.

- Determine how/if a generator determines the waste treatment standards and/or disposal technologies.

- Verify whether the generator satisfies documentation, recordkeeping, notification, certification, packaging, and manifesting requirements.

- Ascertain whether the generator is, or might become, a TSDF and subject to additional requirements.

- Determine who completes and signs LDR notifications and certifications and where these documents are kept.
- Review the waste analysis plan if the generator is treating a prohibited waste in tanks or containers.

Investigators evaluating TSDFs should do the following:

- Ensure the TSDF is complying with generator recordkeeping requirements when residues generated from treating restricted wastes are manifested offsite.
- Verify whether the treatment standards have been achieved for particular wastes prior to disposal.
- Review documentation required for storage, treatment, and land disposal; documentation may include waste analyses and results, waste analysis plans, and generator and treatment facility notifications and certifications.

Subtitle I—Underground Storage Tanks (USTs)

Evaluating Compliance

Because the tanks are located underground, visual/field observations have limited application in determining compliance for USTs. The UST program relies heavily on the use of documents to track the status and condition of any particular tank.

Interviews with facility personnel are important when determining compliance with any environmental regulation. Questions regarding how the facility is handling its UST program will give the inspector insight into the types of violations that may be found. Topics to be covered in the interview include:

- Age, quantity, and type of product stored for each onsite tank.
- How and when tanks have been closed.
- Type of release detection used on each tank (if any); some facilities may have release detection on tanks where it is not required.
- Type of corrosion protection and frequency of inspections.
- Which tanks have pressurized piping associated with them.

Visual/field observations are used to determine if any spills or overfills have occurred that have not been immediately cleaned up. The presence of product around the fill pipe indicates a spill or overfill. Proper release detection methods can also be verified with field observations. During the interviews, ask the facility if monthly inventory control along with annual tightness testing is used. If monthly inventory control is used, check the measuring stick for divisions of 1/8 inch. A field check of the entire facility can also be done to determine if any tanks may have gone unreported. Fillports and vent lines can indicate the existence of a UST.

Documents take up the largest portion of time during a UST inspection. Documents that should be reviewed include:

- Notifications for all UST systems
- Reports of releases including suspected releases, spills and overfills, and confirmed releases
- Initial site characterization and corrective action plans
- Notifications before permanent closure
- Corrosion expert's analysis if corrosion protection is not used
- Documentation of operation of corrosion protection equipment
- Recent compliance with release detection requirements, including daily inventory sheets with the monthly reconciliation
- Results of site investigation conducted at the time of permanent closure.

Document retention rules also apply, so be sure to get all of the documents a facility may be required to keep. To determine if the implementing agency has been notified of all tanks, compare the notifications to general UST lists from the facility. Usually, the facility will keep a list of tanks separate from the notifications and tanks may appear on that list that do not appear on a notification form. Also, compare the notifications to tank lists required in other documents, like the Spill Prevention Control and Countermeasures Plan.

RCRA Non-Notifiers

Anytime an investigator is conducting an inspection, they should be aware of the possibility of a “non-notifier” under RCRA. A non-notifier is a facility who has either not notified the EPA or the delegated state of their hazardous waste activity or is managing hazardous waste in an unpermitted unit. The failure to notify may be intentional or the facility may not be aware that the unit should be regulated.

Two specific circumstances for an investigator to be aware of are as follows:

- a facility that is generating a hazardous waste and failed to notify of their generator status and obtain a RCRA I.D. Number.
- a facility that is disposing of hazardous waste in an on-site surface impoundment or landfill that has been determined by the facility to be either a non-hazardous solid waste management unit or an exempt wastewater treatment unit. (When inspecting the wastewater treatment plant, investigators should be aware that the RCRA exemption applies to tanks only. If wastewater meeting the definition of a hazardous waste is discharged into a surface impoundment, this unit is required to have a RCRA permit.)

This page intentionally left blank.

B. Clean Air Act (CAA)

The Clean Air Act (CAA) is the legislative basis for air pollution control regulations. It was first enacted in 1955 and later in 1963, 1965, 1970, 1977, and 1990. The 1955 and the 1963 Amendments called for the abatement of air pollution through voluntary measures. The 1965 amendments gave Federal regulators the authority to establish automobile emission standards.

Basic Program

The CAA Amendments of 1970 significantly broadened the scope of the Act, forming the basis for Federal and State air pollution control regulations. Section 109 of the 1970 Amendments called for the attainment of National Ambient Air Quality Standards (NAAQS, 40 *CFR* Part 50) to protect public health and welfare from the known or anticipated adverse effects of six air pollutants (as of 1990 the standards were for small particulates, sulfur dioxide, nitrogen dioxide, carbon monoxide, ozone, and lead). The States were required to develop and submit to EPA implementation plans that were designed to achieve the NAAQS. These State Implementation Plans (SIPs) contained regulations that limited air emissions from stationary and mobile sources. They were developed and submitted to EPA on a continuing basis and became federally enforceable when approved.

Section 111 of the 1970 Amendments directed EPA to develop standards of performance for new stationary sources. These regulations, known as New Source Performance Standards (NSPS, 40 *CFR* Part 60), limited air emissions from subject new sources. The standards are pollutant and source specific.

Section 112 of the 1970 amendments directed EPA to develop standards for hazardous air pollutants. These regulations, known as the National Emission Standards for Hazardous Air Pollutants (NESHAPs, 40 *CFR* Part 61), limited hazardous air emissions from both new and existing sources.

The CAA Amendments of 1977 addressed the failure of the 1970 amendments to achieve the NAAQS by requiring permits for major new sources. The permit requirements were based on whether the source was located in an area that did not meet the NAAQS (non-attainment areas). The permit program for sources in attainment areas was referred to as the Prevention of Significant Deterioration (PSD) program.

The CAA Amendments of 1990 significantly expanded the scope of the Act. Section 112 amendments have amended the NESHAP program with the new provisions called "Title III - Hazardous Air Pollutants." Title III listed 189 hazardous air pollutants (Appendix O) and required EPA to start setting standards for categories of sources that emit these pollutants within 2 years (1992) and finish setting all standards within 10 years. It also contains provisions for a prevention-of-accidental-releases program.

Section 211 of the CAA regulates any fuel or fuel additive for use in motor vehicles if the resulting emission would cause or contribute to air pollution that may reasonably be anticipated to endanger public health or welfare, or if the emission products would significantly impair any emission control device or system in general use. There are several provisions under CAA section 211 which regulate fuels such as gasoline, diesel fuel, and fuel additives.

The Federal tampering prohibition is contained in Section 203(a)(3) of the CAA, 42 U.S.C. 7522(a)(3). Section 203(a)(3)(A) of the Act prohibits any person from removing or rendering inoperative any emission control device or element of design installed on or in a motor vehicle or motor vehicle engine prior to its sale and delivery to an ultimate purchaser. Section 203(a)(3)(A) also prohibits any person from knowingly removing or rendering inoperative any such device or element of design after such sale and delivery and the causing thereof.

Section 203(a)(3)(B) of the Act prohibits any person from manufacturing, selling, offering for sale, or installing any part or component intended for use with, or as part of, any motor vehicle or motor vehicle engine where a principal effect of the part or component is to bypass, defeat, or render inoperative any device or element of design installed on or in a motor vehicle or motor vehicle engine in compliance with regulations under this title, and where the person knows or should know that such part or component is being offered for sale or is being installed for such use.

Section 609 of the CAA Amendments of 1990 requires facilities that perform service on vehicle air conditioners to have recycling or recovery equipment and the technicians who use the equipment to be certified by an EPA-approved §609 program.

Evaluating Compliance

The following procedures are used to evaluate compliance with the Clean Air Act.

Before an onsite inspection, the documents listed below should be obtained from State or EPA files and reviewed to determine what regulations apply and what compliance problems may exist.

- The State air pollution control regulations contained in the SIP (State regulations and permits form the basis for the air compliance inspection and will vary from State to State).
- Title V operating permit/application; the State operating and construction permits.
- The most current emissions inventory (check for sources subject to SIP, NSPS, and NESHAPs requirements).
- The Volatile Organic Compound (VOC) and Hazardous Air Pollutant emissions inventory. (The VOC inventory may not be included in the emissions inventory, but reported separately under SARA Title III Form R submittal. More information on the former submittal is found in the Emergency Planning and Community Right-to-Know section.).
- The consent decrees/orders/agreements still in effect and related correspondence.
- The most recent inspection reports.
- The most recent monthly or quarterly Continuous Emission Monitoring/Continuous Opacity Monitoring (CEM/COM) reports.
- AIRS Facility Subsystem (AFS) reports.

- Process descriptions, flow diagrams, and control equipment for air emission sources.

- Facility plot plan that identifies and locates the air pollution emission points.

The onsite inspection should include a review of the records and documents listed below:

- Process operating and monitoring records to determine if permit requirements are being followed.

- Fuel analysis reports (including fuel sampling and analysis methods) to determine if sulfur dioxide emission limits and/or other fuel requirements are being met.

- Reports of process/control equipment malfunctions causing reportable excess emissions (refer to SIP to determine reportable malfunctions and report requirements).

- Source test reports to determine if NSPS, NESHAPs, MACTs, and/or major sources have demonstrated compliance with emission standards.

- CEM reports to determine if NSPS and SIP reporting requirements are being met (reported emissions should be checked against raw data for accuracy, and reported corrective actions should be checked for implementation).

- CEMS/COMS certification tests (relative accuracy and calibration drift) to verify that performance specifications at 40 *CFR* Part 60, Appendix B, are met.

- Records and reports specified in SIP regulations, NSPS, NESHAP, and MACT subparts, and applicable permits.

The onsite inspection should also include the following:

- Visible Emission Observations (VEOs), by inspectors certified to read smoke within the last 6 months, to determine compliance with SIP, NSPS, or NESHAPs opacity limits (document non-compliance with EPA Method 9, 40 *CFR* Part 60, Appendix A).

- A check of real time CEM measurements to determine compliance SIP, NSPS, or NESHAPs limits (opacity CEM measurements can be compared against VEOs).

- A review of CEM/COM calibration procedures and frequency to determine if the zero/ span check requirements and analyzer adjustment requirements of 40 *CFR* Part 60 are being met.

- Observations of process and control equipment operating conditions to determine compliance with permit conditions (if no permit conditions apply, control equipment operating conditions can be compared to baseline conditions from stack tests or manufacturer's specifications for proper operation).

- Observation of control equipment operating conditions and review of equipment maintenance practices and records to determine proper operation of control equipment.

- When inspecting a fuel refinery or terminal and when time permits, the investigator should review records to assess compliance with fuel regulations under CAA section 211. Things to look for include compliance with the new reformulated gasoline

requirements including Reid vapor pressure levels (during summer months only) and oxygenate levels of outgoing gasoline, the sulfur content of outgoing diesel fuel, and the lead level of unleaded gasoline leaving the refinery.

- When inspecting a facility with its own fleet of vehicles or garage, maintenance records for the vehicles should be reviewed to determine compliance with Section 203 of the CAA. A review of air conditioning repair/maintenance records should also be conducted to determine compliance with Section 609 of the CAA.

- A review of all sources to determine if existing, new, modified, or reconstructed sources have construction and operating permits required by SIP (note other process changes that may not require a permit but could affect emissions). For example:

  - Are there any boilers, stationary diesel engines (emergency generators, lift pumps), or waste gas boilers of any size? What are their capacities, when installed or altered?

  - Are there any incinerators for sludge, grease, grit, screenings, etc.? When were they installed or altered?

  - Are there any storage tanks storing any liquid except water? What are their capacities, when installed or altered?

  - Are there any solvent or gasoline tanks? What are their capacities, when installed or altered?

  - Are there any storage silos for storing solid particles (e.g., lime)? What are their capacities, when installed or altered?

  - Are there any air pollution control devices of the following types? When where they installed or altered?

    - Odor control equipment (carbon adsorbers, scrubbers) on such equipment as sludge handling/storage tanks, pump stations, wet-wells, metering stations, grit screening, headworks building?

    - Waste gas burners such as digester flares, boilers, etc.?

    - Scrubbers on pH adjustment process or pretreatment equipment (usually HCl control)?

  - Is there any shop equipment of the following types? When was it installed or altered?

    - Paint spray booths
    - Shotblast booths, controlled (any size) or uncontrolled
    - Solvent degreasers

  - Is there any wastewater or water treatment equipment designed to reduce Volatile Organic Compounds (VOCs), which may emit air contaminants, such as aeration basins, surface impoundments, air strippers, roughing filters, trickling filters, or oil/water separators? When was the equipment installed or altered?

- At industrial/commercial wastewater and pretreatment facilities, are there any aeration basins, lagoons, or settling basins? When were they installed or altered?

- At industrial/commercial treatment works, is there equipment used to dispense odor reducing/masking agents? When was it installed or altered?

- At industrial/commercial treatment works, is there equipment used directly to manufacture fertilizers (including mixers, blenders, conveyors, etc.)? When was it installed or altered?

This page intentionally left blank.

C. Safe Drinking Water Act (SDWA)

Basic Program

Public drinking water supply systems (i.e., that serve at least 25 people or have 15 service connections for at least 60 days per year) are regulated by the Safe Drinking Water Act (SDWA) Amendments of 1986. Public water systems are divided into two categories designated as community and noncommunity systems. A community system serves people year-round, whereas a noncommunity system serves people only for a portion of the time (e.g. hotels and campgrounds). Different requirements apply to each type of system. Different requirements also apply depending on whether the water supply source is surface water or groundwater. EPA sets standards [known as Maximum Contaminant Levels (MCLs)] for the quality of water that can be served by public water systems. Public systems must sample their water periodically and report findings to the State (or EPA, if the State has not been delegated the authority to enforce the SDWA). The systems must notify consumers if they do not meet the standards or have failed to monitor or report. EPA is on a statutory schedule for promulgating a large number of new MCLs.

The Underground Injection Control (UIC) program was developed pursuant to the SDWA (Public Law 93-523), Part C—Protection of Underground Sources of Drinking Water (40 *CFR* Parts 124 and 144 through 148). The scope of the UIC program is the determination of the soundness of construction and operation of injection wells as they relate to the protection of all underground sources of drinking water. The UIC program regulates five classes of injection wells, summarized as follows:

Class I Industrial, municipal, or hazardous waste disposal beneath the lowermost underground source of drinking water (USDW)

Class II Oil and gas-related wells used for produced fluid disposal, enhanced recovery, hydrocarbon storage, etc.

Class III Mineral extraction wells

Class IV Hazardous or radioactive waste disposal above or into a USDW

Class V Injection wells not included in Classes I through IV.

Evaluating Compliance

Monitoring requirements for water supply systems and whether the system can be reasonably expected to routinely provide safe potable water should be determined. Many facilities purchase their potable water supply from a nearby municipality. If no further treatment is provided (e.g., chlorination by the facility), the facility remains a "consumer" rather than becoming a "supplier," and consequently does not have the monitoring or reporting requirements that a supplier would have. Nevertheless, the facility does have a responsibility to ensure that their actions do not result in contamination of the municipal water supply (e.g., through cross-connection). The audit team should be alert to these possibilities.

Inspectors should:

- Verify public water system records of monitoring and reports of exceedences of MCLs
- Interview water system personnel to identify potential operations and maintenance problems
- Check for appropriate treatment systems, such as adequate disinfection
- Check for cross-connections to the water supply and distribution system
- Obtain water source, treatment, and service area information
- Verify that sample locations are appropriate and representative for each contaminant (i.e. sample collected in distribution system versus entry to distribution system)
- Verify that sampling techniques and procedures are appropriate

For UIC inspections, the following should be reviewed:

- Current status of wells (active, abandoned, under construction repairs)
- Types of wastes discharged to wells
- UIC permit and permit conditions, if applicable
- Injection well construction
- Potential pathways of endangerment to Underground Sources of Drinking Water (USDWs)
- Protection of USDWs from endangerment
- Frequency and type of Mechanical Integrity Testing (MIT)
- Annular pressure
- Annular pressure monitoring
- Radioactive tracer surveys
- Installation methods for well plugging
- Remedial operation
- Applicability of land disposal restrictions to injection well operations
- Recordkeeping and evidence documentation
- Outlets for floor drains
- Connection to "dry" wells

- Evidence of surface ponding
- Presence of septic systems and/or leach fields

Several States and industries have requested approval of alternative mechanical integrity testing methods or variances to accommodate special local hydrogeological conditions, historical practices, or industry interests. Inspectors and field investigators should be cautioned to keep current with special permit conditions and the status of any pending approvals/denials of alternative mechanical integrity testing procedures and variances.

D. Toxic Substances Control Act (TSCA)

This section describes those specific aspects of toxic substances control that are addressed by the Toxic Substances Control Act (TSCA) and its associated rules and regulations (40 *CFR* Parts 702 through 799).

Basic Program

The regulation of toxins under TSCA is divided into two components for Agency enforcement program management purposes.

1. "Chemical control" covers enforcement aspects related to specific chemicals regulated under Section 6 of TSCA, such as Polychlorinated Biphenyls (PCBs), Chlorofluorocarbons (CFCs), and asbestos.

2. "Hazard evaluation" refers to the various recordkeeping, reporting, and submittal requirements specified in Sections 5, 8, 12, and 13 of TSCA; although, some elements of what might be termed "chemical control" are also addressed in these sections. Sections 12 and 13 of TSCA, which pertain to chemical exports and imports, respectively, will not be covered in this manual because of their special nature and unique requirements.

Prior to discussing TSCA activities at a facility, the investigator must present appropriate facility personnel with copies of two TSCA inspection forms:

1. Notice of Inspection—Shows purpose, nature, and extent of TSCA inspection.

2. TSCA Inspection Confidentiality Notice—Explains a facility's rights to claim information at the facility as TSCA Confidential Business Information.

Before leaving the site, two additional forms must be completed, as appropriate:

1. Receipt for Samples and Documents—Itemizes all documents, photos, and samples received by the investigator during the inspection.

2. Declaration of Confidential Business Information—Itemizes the information that the facility claims to be TSCA Confidential Business Information.

Evaluating Compliance

Chemical Control

Although the controlled substances most frequently encountered during multi-media investigations are PCBs, the investigator should determine if other regulated toxic substances are present at the facility. Currently these include metal working fluids (Part 747), fully halogenated chlorofluoroalkanes (40 *CFR* Part 762), and asbestos (40 *CFR* Part 763); additional toxic substances may be regulated in the future. Because the probability of finding

PCBs and PCB-items at the facility is greater than finding other TSCA-regulated substances, the following discussion is directed toward an evaluation of compliance with proper PCB and PCB-item handling procedures. If other TSCA-regulated substances are found, the investigator should consult the regulations for appropriate requirements.

Management of PCBs/PCB-items is regulated under 40 *CFR* Part 761. In general, these regulations address recordkeeping, marking and labeling, inspections, storage, and disposal.

Facilities that store and/or dispose of PCBs and PCB-items should have EPA-issued letters of approval that contain facility operating and recordkeeping requirements in addition to those specified in 40 *CFR* Part 761. The investigator must obtain a copy of these approvals and any subsequent notifications to evaluate facility compliance. The inspector should review Part 761.30 to identify uses of PCB transformers which are prohibited beginning October 1, 1990, but with effective dates extending to October 1, 1993. The inspector should also review the requirements found in Part 761.30 that allow the installation of PCB transformers for emergency use.

In general, the compliance evaluation includes obtaining and reviewing information from Federal, State, and local regulatory agency files; interviewing facility personnel regarding material handling activity; examining facility records and inspecting materials handling units. Specific investigation tasks include:

-
    - Inspect all in-service electrical equipment, known or suspected of containing PCBs, for leaks or lack of proper marking. A similar inspection should also be made of any equipment that the facility is storing for reuse. Make certain that any remedial actions were quick and effective in the case of leaks, spills, etc.

- If the above equipment includes any PCB transformers or capacitors, make certain that all relevant prohibitions are being met, such as those involving enhanced electrical protection, as well as other requirements in the Use Authorization section of the PCB Rule. Make certain that any hydraulic or heat transfer systems suspected of containing PCB fluids have been properly tested.

- Determine whether the facility is involved with servicing PCB items or using/collecting/ producing PCBs in any manner. If so, make certain that the appropriate requirements of the PCB Rule are being met.

- Determine whether the facility is involved with either the storage or disposal of PCBs/PCB-items. Inspect all storage for disposal facilities for proper containment, leaking items, proper marking, dates/time limits, location, protection from elements, and other necessary requirements. If the facility disposes of PCBs, make certain that proper methods are being employed and that design and operation of disposal units is in accordance with regulatory requirements.

- Determine whether storage/disposal facilities are complying with the notification and manifesting requirements contained in Subpart K of the PCB Rule.

- Thoroughly review, for purposes of adequacy and regulatory compliance, all records and reports required by the PCB Rule including the following:

    - Annual documents

- Inspection logs
- PCB transformer registration letters
- Manifests/certificates of destruction
- Test data
- Spill cleanup reports
- EPA-issued permits or letters of approval
- SPCC plan, if one is necessary
- Operating records
- Notification of PCB activity.

Hazard Evaluation

Establishing compliance with the various hazard evaluation aspects of TSCA is best accomplished through review and evaluation of the recordkeeping, reporting, and submittal data required by the various regulatory components of Sections 5 and 8. In general, Section 5 addresses new chemicals (i.e., those not on the TSCA Chemical Substances Inventory) and Section 8 addresses existing chemicals (i.e., those chemicals that are on the TSCA Chemical Substances Inventory).

Much of the information obtained and reviewed under these two sections of TSCA will be declared "TSCA Confidential Business Information" by company officials, and thus special security procedures must be followed during review and storage of the documents.

40 *CFR* Parts 703 through 723 should be consulted for an explanation of TSCA terms and definitions. The following list summarizes the different objectives for inspections of the key TSCA Sections 5 and 8 components.

1. Premanufacture Notification (PMN)

   a. Verify that all commercially manufactured or imported chemicals are on the TSCA Chemical Substances Inventory, are covered by an exemption, or are not subject to TSCA.

   b. Verify that commercial manufacture or import of new chemicals did not begin prior to the end of the 90-day review date, and not more than 30 days before the Notice of Commencement (NOC) date. If commercial manufacture or import has not begun, verify that no NOC has been submitted.

   c. Verify the accuracy and documentation of the contents of the PMN itself.

2. Research and Development (R&D) Exemption

   a. Verify that the recordkeeping and notification requirements are being met for all R&D chemicals.

   b. Verify that "Prudent Laboratory Practices" and hazardous data searches are adequately documented.

3. Test Marketing Exemption (TME)

   a. Verify that the conditions spelled out in the TME application are being met, particularly with respect to dates of production, quantity manufactured or imported, number of customers and use(s).

   b. Verify that the TME recordkeeping requirements are being met.

4. Low Volume Exemption (LVE) and Polymer Exemption (PE)

   a. Verify that specific conditions of the exemption application are being met, and that all test data have been submitted.

   b. For an LVE, verify that the 1,000-kg limit per 12-month period has not been exceeded. For a PE, ensure that the chemical structure and monomer composition(s) are accurate.

   c. Verify that recordkeeping requirements for both LVEs and PEs are being met.

5. 5(e)/5(f) Order, Rule, or Injunction

   a. Verify that all conditions of the order, rule, or injunction are being followed, including use of protective equipment, glove testing, training, and recordkeeping.

   b. If a testing trigger is specified, verify production volume and status of testing activity.

6. Significant New Use Rule (SNUR)

   a. Verify that no commercial production has occurred prior to the 90-day review date.

   b. Verify that SNUR notices (i.e., Significant New Use Notices [SNUNs]) have been submitted for all applicable manufactured, imported, or processed chemicals.

   c. Verify technical accuracy of SNUN and completeness of required recordkeeping.

7. Bona Fide Submittals

   Determine the commercial production (or import) status and R&D history of those bona fide chemicals not found on the confidential 8(b) inventory. Verify findings against applicable PMN, TME, and other exemption.

8. Section 8(a) Level A PAIR and CAIR Report

   a. Determine if Preliminary Assessment Information Rule (PAIR) and Comprehensive Assessment Information Rule (CAIR) reports have been submitted for all 8(a) Level A listed chemicals manufactured or imported by the facility.

   b. Verify the accuracy of submitted PAIR information, particularly the reported figures for total production volume and worker exposure levels.

   c. Verify the accuracy of submitted CAIR information and if the report meets the date specified in the regulation.

9. Section 8(b) Inventory Update Rule (IUR)

   a. Verify the accuracy of the information submitted in response to the IUR.

   b. Determine that required information was submitted by the deadline for all chemicals subject to IUR.

10. Section 8(c) Recordkeeping

   a. Determine if the facility has a Section 8(c) file and that allegations of significant health and environmental harm on record are properly filed and recorded.

   b. Determine that all applicable allegations have been recorded and filed.

   c. Determine if the facility has a written Section 8(c) policy and if the policy includes outreach to the employees.

11. Section 8(d) Reporting

   Determine if copies (or lists) of all unpublished health effects studies have been submitted by manufacturers, importers, and processors for any Section 8(d) listed chemical.

12. Section 8(e) Reporting

   a. Verify that all Section 8(e) substantial risk reports to the Agency were accurate and submitted within the required time frames.

   b. Verify that all substantial risk incidents and/or test results have been reported to EPA.

   c. Determine that the company has an adequate written policy addressing Section 8(e), and that it relieves employees of individual liability.

This page intentionally left blank.

E. Federal Insecticide, Fungicide, and Rodenticide Act (FIFRA)

Basic Program

Pesticides are regulated by FIFRA and regulations promulgated pursuant to FIFRA. Under FIFRA, pesticide products must be registered by EPA before they are sold or distributed in commerce. EPA registers pesticides on the basis of data adequate to show that, when used according to label directions, they should not cause unreasonable adverse effects on human health or the environment. States have primary enforcement responsibility for FIFRA.

To ensure that previously registered pesticides meet current scientific and regulatory standards, in 1972 Congress amended FIFRA to require the "reregistration" of all existing pesticides.

Evaluating Compliance

The following list is used in conjunction with specific storage/use/disposal requirements found on pesticide labels. FIFRA requires a written Notice of Inspection and written Receipt for Samples collected.

- Determine types and registration status of all pesticides produced, sold, stored, and used at the facility, particularly if any are restricted or experimental use pesticides.
- Determine use(s) of each pesticide.
- Determine certification status of facility/handlers.
    - Verify who certifies facility/pesticide handlers (EPA, State, Department of Defense).
    - Determine if commercial or private applicator.
    - If restricted-use pesticides are used, check if pesticide applicators are authorized to use these pesticides.
    - Check expiration dates on licenses/certificates.
- Review applicable records.
    - Check previous inspection records and complaints.
    - Check application records.
    - Check restricted-use pesticides records (must be kept at least 2 years). Document suspected violations accordingly.
    - Check inventory records.

- Check training records.

- Inspect storage, mixing/loading, and container disposal areas
  - Check bulk storage areas for compliance with Federal/State rules.
  - Check location, ventilation, segregation, shelter, and housekeeping of pesticide storage handling areas. Check security, fire protection, and warning signs, as may be required by State regulations.
  - Check mixing equipment/procedures for reducing handlers' exposures to pesticides.
  - Check for safety equipment/procedures/use.
  - Check container cleanup and disposal procedures.
- Pesticide waste disposal
  - Check to see that pesticides are disposed of in accordance with applicable label and RCRA requirements.
- Determine measures taken to ensure farm worker safety.
  - Check pesticide use records for re-entry time limit notation.
  - Check pesticide use records for informing farmer(s) or warning workers and/or posting fields.
- Observe actual pesticide application.
  - Observe mixing/loading and check calculations for proper use dilution.
  - Observe when spray is turned on/off with respect to ends of field.
  - Watch for drift or pesticide mist dispersal pattern.
  - Note direction of spraying pattern and trimming techniques.
  - Record wind speed and direction, air temperature, and relative humidity.
  - Observe application with respect to field workers, houses, cars, power lines, and other obstacles.
  - Determine if applicator and assisting personnel are wearing safety gear required by the label.

F. Emergency Planning and Community Right-to-Know Act (EPCRA)

Basic Program

The Emergency Planning and Community Right-To-Know Act of 1986 is a free-standing law contained within the Superfund Amendments and Reauthorization Act (SARA) of 1986. EPCRA is also commonly known as SARA Title III. EPCRA requires dissemination of information to State and community groups and health professionals on chemicals handled at regulated facilities.

An EPCRA inspection verifies that the facility owner/operator has notified State and local agencies of regulated activities; has submitted information to specific State and local agencies; and has prepared and submitted all other required reports.

Evaluating Compliance

Emergency Planning (Sections 301 through 303)

EPA promulgated regulations that identify extremely hazardous substances and the levels to be regulated under EPCRA. The inspector should determine whether the facility is subject to EPCRA regulation. If the facility does meet the requirements, the inspector should verify whether the facility owner/operator:

- Notified the State emergency response agency and the local emergency planning committee that the facility is regulated under EPCRA.
- Designated a facility emergency coordinator to assist the local emergency planning committee in the planning process.
- Notified the local emergency planning committee of the emergency coordinator's identity.

Emergency Notification (Section 304)

The owner/operator of a facility subject to EPCRA must immediately report releases of hazardous substances above the reportable quantity. Substances subject to this requirement are the extremely hazardous substances listed in 40 *CFR* Part 355 and hazardous listed in 40 CFR Part 302. The inspector should verify whether an immediate notification (within 15 minutes) was made to the:

- State emergency response commission
- Local emergency planning committee
- National Response Center

Community Right-to-Know Requirements (Sections 311 through 312)

Manufacturing facilities subject to the Occupational Safety and Health Act (OSHA) Hazardous Communication regulation (29 *CFR* Part 1910) are required to prepare Material Safety Data Sheets (MSDS) for each hazardous chemical handled at the facility. OSHA revised its Hazardous Communication Regulation, effective September 23, 1987, to require that MSDSs be prepared by nonmanufacturing facilities. The inspector should verify that the facility owner/ operator has sent the following to the State emergency response commission, the local emergency planning committee, and the local fire department:

- MSDSs or a list of chemicals covered by MSDSs found at the facility above the threshold planning quantity (40 CFR Part 370 Subpart B)

- An annual inventory (Tier 11 Form) of hazardous chemicals found at the facility above the threshold planning quantity (40 CFR Part 370 Subpart D).

Toxic Chemical Release Reporting (Section 313)

Covered facilities (40 *CFR* 372.22) that manufacture, process, or otherwise use certain chemicals above specified amounts must annually report releases to the environment. The inspector should determine whether the facility owner/operator is required to submit this annual report (Form R). The following criteria are applied to determine if the facility is required to report:

- The facility has the equivalent of 10 or more full-time employees.

- The facility is in SIC codes:
  - 10 (except 1011, 1081, and 1094)
  - 12 (except 1241)
  - 20 through 39
  - 4911, 4931, or 4939 (limited to facilities generating power for consumer use by combusting coal and/or oil)
  - 4953 (limited to RCRA Subtitle C facilities)
  - 5169 and 5171
  - 7389 (limited to facilities engaged in solvent recovery services)

- The facility manufactured or processed in excess of 25,000 pounds or used in any other manner 10,000 pounds or more of the chemicals listed on the Toxic Release Inventory (TRI). The list of TRI chemicals can be found in the current year's reporting instructions.

G. Pollution Prevention

Basic Program

EPA is developing an Agency-wide policy for pollution prevention. Present authorities were established in the 1984 Hazardous and Solid Waste Amendments to RCRA (Section 3002). The October 1990 Pollution Prevention Act established pollution prevention as a national priority. The September 16, 1998, Executive Order 13101, Section 403, Federal Facility Compliance.

Evaluating Compliance

EPA has developed a policy regarding the role of inspectors in promoting waste minimization (OSWER directory number 9938.10). As stated in the policy, to evaluate compliance, the Inspector should:

- Check hazardous waste manifests for a correctly worded and signed waste minimization certification.
- Determine whether this certification was manually signed by the generator or authorized representative.
- Confirm that a waste minimization program is in place by requesting to see a written waste minimization plan, or requesting that the plan be described orally, or requesting that evidence of a waste minimization program be demonstrated. The inspector can, and should, visually check for evidence of a "program in place" onsite.
- Check the Biennial Report and/or Operating record of generators and TSDFs, as appropriate. These documents should contain descriptions of waste minimization progress and a certification statements. If known omissions, falsifications, or misrepresentations on any report or certification are suspected, criminal penalties may apply and the case should be referred for criminal investigation.
- Check any waste minimization language included in the facility's permits, any enforcement order, and settlement agreements. Verify that waste minimization requirements are being satisfied.

The policy also states that the inspector should promote waste minimization by:

- Being familiar with, recommending, and distributing waste minimization literature.
- Referring the facility to the appropriate technical assistance program for more specific or technical information.
- Providing limited, basic advice to the facility of obvious ways they can minimize their waste. This advice should be issued in an informal manner with the caveat that it is not binding in any way and is not related to regulatory compliance.

The multi-media inspection team can also document cross-media transfers of waste streams, that can result in false claims of waste minimization. For example, a facility could treat a solvent wastewater stream in an air stripper that has no air pollution control devices. On paper, the amount of solvent discharged to a land disposal unit or sewer system could show a reduction, but the pollutants are going into the air, possibly without a permit. Another example would be a facility claiming a reduction in hazardous waste generated because the waste steam was delisted.

APPENDIX Z

NATIONAL MULTI MEDIA SCREENING INSPECTION WORKSHEET

This page left blank intentionally.

GENERAL INFORMATION

1. Inspector(s) Name _____ 2. Date _____

3. Facility Name/Address

_____

_____

4. Facility Contact(s)/Title(s)

_____

_____

5. Description of Facility Operations

SIC Code _____

Number of Employees _____

Operating Schedule _____

_____

Major Products/Production Capacity

_____

_____

_____

_____

RCRA

Observations

1. Does the facility generate anything that looks like waste material that might contain hazardous constituents?

_____

2. If so, describe what the facility says regarding the RCRA regulatory status of the waste material and their rational for such determination. (e.g., have they made a RCRA waste identification and what was that determination? Have they determined the waste to be exempt from regulation and why?

_____
_____
_____
_____

3. Describe the process that generates the waste material.

_____
_____
_____

4. Do you see any containers of hazardous waste, land disposal units, lagoons, treatment units? Approximately how many?

_____
_____
_____

5. Were any of the units that contain or handle hazardous wastes (containers, berms, dikes, tanks, piping, impoundments, etc.) in poor condition, unmarked, opened, leaking, cracked, corroded, or in a condition that would allow the release or potential release of hazardous wastes? If yes, describe unit(s). Any actual or evidence of past releases observed? If so, describe waste (i.e., liquid, sludge, etc.) unit(s), and location.

_____
_____
_____
_____
_____
_____

6. Does the facility operate a boiler or industrial furnace which burns hazardous wastes? Was there any incineration of hazardous waste on site?

_____
_____
_____
_____

7. Was there any evidence of spills, leaks, or discharges of hazardous wastes? If so, provide location and description.

_____
_____

_____

Interview Questions/Records Review

1. If the facility is a generator of hazardous waste was there a notification of hazardous waste activity? What is the quantity (kilograms/month) of hazardous wastes produced? How are they produced?

_____
_____
_____
_____

2. What is the EPA Identification Number? _____

3. What was the basis (i.e. test, knowledge of process and waste) for determining if the facility did or did not produce or handle hazardous wastes? Who made the determination?

_____
_____
_____

UST

Observations

1. Are there any underground storage tanks? _____

2. Approximately how many? What are the contents? (Wastes, virgin petroleum, or chemicals) _____
_____

3. What type of leak detection is used? When was it last used?
_____
_____
_____
_____

4. Is there any evidence of leaks, spills, broken piping, broken fill/vent lines, or leaking pump joints or valves? Provide location and description.
_____
_____
_____

Interview Questions/Records Review

1. If the tanks are for virgin petroleum or chemicals (not wastes), are they registered with the state? Date of registration? Date of tank(s) installation?
_____
_____

SPCC

Observations

1. Does the facility have the capacity to store oil either in above or below ground tanks? How many gallons? Does any tank have a capacity of more than 660 gallons in a single tank or does the facility have a capacity of more than 1320 gallons in a number of tanks or a capacity of more than 42,000 gallons below the ground?

_____

_____

_____

2. What type of secondary containment is used at the facility? Were there any deficiencies in the secondary containment (cracks, broken, dikes left open)? Is it adequate to contain the entire contents of the largest tank?

_____

_____

_____

Interview Questions/Records Review

1. Does the facility have a certified (signed by a P.E.) plan? When was it last updated?

_____

_____

2. Has there been any major changes to oil storage at the facility since the last modification of the plan?

_____

WETLANDS

Observations

1. Are there any wet areas near the facility with wetland-type vegetation (cattails, rushes, sedges) that have been disturbed by waste disposal, ditching, or filling?

_____

_____

_____

Interview Questions/Records Review

1. Does the facility have a federal section 404 permit or any state or local permit authorizing the fill?

_____

_____

FIFRA

Observations

1. Does the facility produce pesticides? _____

2. Is the facility applying pesticides? _____

3. Where are the pesticides stored?

_____

Interview Questions/Records Review

1. If the facility produces pesticides what is the establishment's registration number?
   _____

2. If the facility is applying pesticides what is the registration number of the pesticides?
   _____

3. If the facility is applying pesticides what is the method of application?
   _____

AIR

Observations

1. Is there any asbestos on site? _____

2. Is the facility undergoing or has the facility undergone any renovations or demolitions during the last 18 months which involve the removal or disturbance of asbestos-containing materials? Approximately how much asbestos (square feet or linear feet) was removed?

_____
_____

3. Does the facility have any coating or printing operations? Does the facility use any paints or organic solvents? What, if any, type of air pollution control is used? Was it operating?

_____
_____
_____

4. Were there any odors? What process was the source of the odors? Describe the odors.

_____
_____
_____
_____

5. Were there any visible (opaque smoke) emissions? What process was the source? Were their any fugitive (not from a stack) emissions? Was the air pollution control equipment, if any, operating? Describe source.

_____
_____
_____
_____

Interview Questions/Records Review

1. If asbestos was removed was notification provide to the State and EPA?

_____

2. If the facility has coating or printing operations are they water based or organic solvent based?

_____

3. Does the facility handle/emit any of the National Emission Standards for Hazardous Air Pollutants (NESHAP) chemicals other than asbestos (mercury, beryllium, vinyl chloride, benzene, arsenic, radio nuclides)? Describe process.

_____
_____
_____

4. Has the facility added new or expanded existing processes in the last two years? Was it permitted by EPA of the State?

TSCA-PCBs

Observations

1. Did the facility have or does it have any PCB electrical equipment? What equipment (type and quantity) is on-site?

_____
_____
_____
_____

2. Does the facility have a PCB equipment storage area for disposal or reuse? Describe the storage area (i.e. concrete pad, walls, roof, curbs).

_____
_____
_____
_____

3. Are there any labels/markings on the PCB equipment?

_____
_____
_____

4. Is there any leaking PCB electrical equipment? Describe.

_____
_____
_____
_____

5. Does the facility have any hydraulic systems? Any leaking?

_____
_____

Interview Questions/Records Review

1. If the facility has PCB electrical equipment was it tested? What were the test results?

_____

_____

2. If the facility has any hydraulic systems when were they tested for PCBs? What were the test results?

_____

_____

WATER-NPDES

Observations

1. Does the facility use water in it's manufacturing process?

_____

2. Does the facility discharge to a stream, municipal sewer, or use subsurface disposal?

_____

_____

3. What process(es) generate wastewater? Is the wastewater treated? Is the effluent clear? Does the treatment plant appear to be maintained (look for rust, dry basins, abandoned equipment, etc.)?

_____

_____

_____

_____

_____

_____

4. Where does the storm water drain to? _____

_____

_____

5. Where do floor drains discharge?

_____

_____

Interview Questions/Records Review

1. How is the treatment plant's sludge disposed? How is it tested?

_____
_____
_____
_____
_____

EPCRA

Interview Questions/Records Review

1. Were there any chemical releases in excess of the reportable Superfund quantities (see below)? Who was provided the notification? Was it oral or written?

_____
_____
_____

2. Does the facility manufacture, process, or use any toxic chemicals in a quantity greater than 10,000 lbs/yr? Identity them. Are any of them section 313 chemicals[1]?

_____
_____
_____
_____

3. If the answer to question 2 is yes, has the facility submitted the toxic chemical release form (R)?

_____
_____

4. Does the facility have the Material Safety Data Sheets on site and were they submitted to the State Emergency Response Commission (SERC) and/or the Local Emergency Planning Committee (LEPC)?

_____
_____
_____

5. Has the facility submitted the Emergency and Hazardous Chemical Inventory forms to the LEPC and SERC?

_____
_____

SDWA-UIC

Observations

1. Are there any discharges other than sanitary waste (i.e. industrial wastes) into or onto (including drain fields) the ground? Is an on-site septic disposal system used? Describe the discharges and disposal system.

_____
_____
_____

Interview Questions/Records Review

[1] The chemicals subject to these requirements can be found in EPA publication number 560/4-92-011, January 1992, "Title III, List of Lists".

1. Does the facility have or has it had any wells (dug, drilled or driven), dry wells, leachfields, or septic systems? Did they receive(d) commercial or industrial waste (liquid and/or solid), cooling water, or drainage from roof drains, floor drains, or parking lots? If yes, give a description.

_____

_____

_____

2. Does the facility have a permit? _____

3. What is the current status of wells (active, abandoned, under construction, repairs)?

_____

_____

4. If the wells are inactive what was the date they were last used? _____

SDWA-PWS

Interview Questions/Records Review

1. What is the facility's source of drinking water? Does the facility have a private well? How many people does it serve?

_____

_____

_____

2. Is the water sampled and analyzed for contaminants? Are the results reported to the state or EPA?

_____

_____

ENVIRONMENTAL ASSESSMENT

1. Is there any evidence of environmental impacts that haven't been addressed? Possible examples include:

- additional evidence of spills, leaks
- vegetation damage in the surrounding area
- odors in the surrounding neighborhood
- neighborhood covered with "dusts"
- poor water quality in streams near the facility.

_____
_____
_____
_____
_____
_____
_____
_____

2. Were there situations of possible excessive occupational exposure that should be referred to OSHA?

_____

_____

_____

This page intentionally left blank.

APPENDIX AA

BIO-SECURITY GUIDANCE (Final)

This page intentionally left blank.

December 10, 2001

MEMORANDUM

SUBJECT: Routine Biosecurity Procedures for EPA Personnel Visiting Farms, Ranches, Slaughterhouses and other Facilities with Livestock and Poultry

FROM: Michael M. Stahl, Director /s/
Office of Compliance

TO: Acting and Current Regional Administrators and Deputy Regional Administrators

Attached is the final biosecurity guidance for EPA personnel visiting livestock or poultry facilities, including ranches, dairies, feed yards, sale yards, swine premises, slaughterhouses, and other facilities where there are animals or unprocessed animal tissues that may transmit diseases. The guidance was prompted by heightened national concern about the spread of animal diseases. Failing to take appropriate steps to prevent disease transmission could result in severe financial impacts on farmers and the destruction of potentially many of thousands of animals.

While EPA had already incorporated biosecurity discussions into basic CAFO Inspector Training, it was clear that EPA needed to formalize and to reinforce biosecurity measures. Also, while CAFO inspections could be one avenue for possible disease transmission by EPA personnel, guidelines were needed for all EPA field activities that could affect livestock.

The guidance was developed in coordination with USDA's Natural Resources Conservation Service and Animal and Plant Health Inspection Service (APHIS) and the Food and Drug Administration. We circulated drafts for comment to these organizations, EPA headquarters offices, regions, states, and academic and industry contacts. The final guidance relies heavily on and incorporates much of guidance developed by APHIS for USDA employees on June 21, 2001. My thanks to all who contributed to the development of this guidance.

If you have any questions about this guidance, please contact me or Carol Galloway, National Agriculture Compliance Assistance Center, at 913-551-5008.

Attachment:
Routine Biosecurity Procedures for EPA Personnel Visiting Farms, Ranches, Slaughterhouses, and Other Facilities with Livestock and Poultry

cc: Sylvia Lowrance, OECA, AAA (w/o attachments)
Rick Colbert, OC/AgD (w/o attachments)
Regional Enforcement Coordinators, Regions 1-10 (electronic only)
National Agriculture Sector Contacts (electronic only)
Eric Schaeffer, Director, ORE
James Makris, Director, CEPPO
Marcia Mulkey, Director, OPP
Michael Cook, Director, OWM
John Seitz, Director, OAQPS
John Chamberlin, OARM, OA
Ty Vannieuwenhoven, USDA, APHIS
Tom Christensen, USDA, NRCS
Julius Jimeno, OARM, OA, SHEMD
Jeff Davidson, OARM, OA, SHEMD
Judy Nelson, OPPTS
Jean-Mari Peltier, OA
Ray Mars, FDA

ROUTINE BIOSECURITY PROCEDURES FOR EPA PERSONNEL VISITING FARMS, RANCHES, SLAUGHTERHOUSES AND OTHER FACILITIES WITH LIVESTOCK AND POULTRY

This guidance establishes routine procedures to minimize the risk of EPA personnel transmitting animal diseases from livestock or poultry facilities, including farms, ranches, dairies, feed yards, sale yards, swine premises, slaughterhouses, and other facilities where there are animals or unprocessed animal tissues, secretions or excretions (including saliva, manure or urine, soiled feed, bedding, water or dirt, milk) to livestock or poultry. Often, owners/producers have adopted more stringent biosecurity measures than these procedures. More stringent measures might include specific directions on site entry (e.g., showering, changing clothes to come onto or leave the premises, vehicle washing), or vehicle travel on the site, and other measures. EPA should discuss appropriate biosecurity measures with the operator prior to entering animal areas, and are encouraged to follow the more stringent measures.

Separate emergency procedures will be applicable in cases of actual outbreaks of contagious animal diseases. In such a case, EPA generally will avoid visiting affected areas and will coordinate with USDA's Animal and Plant Health Inspection Service (APHIS) and local emergency control authorities concerning activities in these areas. Periodically, EPA will contact the offices of the appropriate APHIS Area Veterinarians in Charge and the offices of the state veterinarians to identify any areas with existing emergency animal disease events. The addresses and telephone numbers of these offices are attached.

EPA personnel should be aware of personal health and safety issues when visiting livestock facilities and consult with EPA's Health and Safety staff with questions about proper procedures. Livestock facilities may include OSHA-defined "confined spaces," e.g., manure pits. If staff need to enter such areas, all appropriate safety precautions must be followed. In addition, some animal diseases can be spread to humans, such as brucellosis (bacteria) and echinococcus (parasite).[1] Fortunately, the U.S. largely has eliminated major risk of disease transmission from animals to humans by a combination of veterinary medicine and state regulation.

The following procedures are consistent with written procedures developed by APHIS for use by USDA personnel (June 12, 2001).

<u>Biosecurity Procedures</u>

- Individuals should not make on-site visits to livestock operations if they have visited a foreign country and were exposed to or had contact with farm animals (with or without a known contagious disease) within 5 days prior to the site visit. Also, clothing and shoes worn on foreign farm visits should be cleaned before use on U.S. facilities.
- Thoroughly wash hands with soap and water or antibacterial wipes or gel before entering and

[1]Brucellosis is transmitted through contaminated and untreated milk and milk products and by direct contact with infected animals (cattle, sheep, goats, pigs, camels, buffaloes, and wild ruminants) or animal carcasses. It is extremely variable in humans. The acute form (less than 8 weeks from illness onset) may result in nonspecific and "flu-like" symptoms including fever, sweats, malaise, anorexia, headache, myalgia, and back pain. Echinococcus granulosus lives on dogs and livestock, and infects humans through contact with these animals. Allergic reactions and damage to various organs from cyst formation are the most common forms of disease in humans.

after leaving any animal facility. Disposable latex gloves also may be used but not as a substitute for proper hand washing.

- Park your vehicle on paved or concrete areas, away from farm production sites, to avoid contact with dirt, mud or manure. If not possible, be certain that tires are free of dirt and debris by hosing the tires and wheel wells before leaving the premises. If this does not clean the tires adequately, take the vehicle to a nearby pressure car wash. Including dates and types of vehicle washing in the vehicle log book is recommended.
- Consider using a vehicle supplied by the facility operator for on site travel if available.
- Prior to entering the site, put on disinfected rubber boots or other footwear that has been cleaned and disinfected, or wear new disposable boot covers. The operator may have its own coveralls and boots for you to wear. However, if visiting only low-risk areas, such as offices that are located away from animal areas, clean street shoes or boots are acceptable (hand washing is still needed). [Note: Boot covers may not provide sufficient traction to safely navigate slopes surrounding lagoons and pits. Personnel may want to use tape to secure the boot cover to prevent slippage].
- On entering a facility, acknowledge any and all other livestock facilities visited within the previous 48 hours including whether or not EPA entered any animal confinement or waste storage areas.
- Inform the operator of where the EPA staff wants to go on the site, determine what biosecurity procedures, if any, the owner/operator has for the on-site locations to be visited, and determine which biosecurity procedures will be followed for the areas to be visited.
- EPA should only enter animal production buildings if it is essential to complete the goals of the visit, and should avoid contact with livestock, poultry or other animals (wild or domestic) on any facility. If close contact with animals is expected, including walking through narrowly confined pens or lots where animals are within reach, wearing coveralls is recommended.
- Designate the interior of your vehicle as a “clean area” and keep clean supplies in this area.
- Designate a “dirty area” of your vehicle, such as the trunk of the car or a specified enclosed area of a truck bed for double bagged clothes or dirty equipment to be taken off site.

- Before leaving the site, clean and disinfect boots or tightly bag boots for later cleaning. Scrub boot bottom and sides to remove all dirt and debris, then wash with disinfectant solution. Disinfectants are not effective on dirt, manure or other organic matter.
- Clean and disinfect equipment if contaminated.
- Use disinfectants that have been registered (or exempted) by EPA for the intended use (see below). Keep a copy of the label and the Material Safety Data Sheet (MSDS) for any registered disinfectant used and make both available to the facility upon its request. Follow all label safety precautions and dispose of empty containers, unused disinfectant solution, and used disinfectant in accordance with label instructions.
- If non-disposable clothing is soiled with manure, blood, milk, or other animal secretions or there has been close contact with livestock (actual handling or walking where animals were within reach), before leaving the site, double bag clothing for later cleaning.
- Dispose of soiled boot covers, and disposable clothing on-site if acceptable to the owner/operator. Where on-site disposal is not possible, double bag and tightly seal all contaminated clothing and gear in disposable bags.
- Inform the owner/operator of the areas of the site that were visited, and the biosecurity procedures taken. This can be done at an inspection closing conference.

Supplies:

- clean boots or new disposable boot covers
- clean change of clothing or coveralls
- appropriate registered or exempted disinfectant (see below)
- water (at least minimum required for hand washing and disinfection)
- a bucket or tray to contain disinfectant
- long handled brush
- clean bags for trash disposal or storage of items to be cleaned
- liquid and/or gel antibacterial soap or wipes
- first aid kit including an eye wash
- phone numbers of the state veterinarian or other local officials available in case you suspect animal diseases are present. Share any such observations with the owner/operator as soon as possible

Disinfectants for Routine Biosecurity

The following products are currently registered by EPA as being effective against a broad range of disease-causing organisms, including Foot and Mouth Disease; they are not effective against all disease-causing organisms. Consult the label information and, if other diseases are a concern, consult the state veterinarian or state department of agriculture.

Virkon S (EPA Reg. No. 62432-1, label and MSDS)
Oxonia Active (EPA Reg. No. 1677-129, label and MSDS)

There are also two household chemicals subject to EPA Section 18 “quarantine exemptions” (i.e., they are exempted from FIFRA pesticide registration requirements) for use as Foot and Mouth Disease disinfectants. They are issued to APHIS but designed so that the general public can make treatments themselves using these chemicals. One permits vinegar (acetic acid) to be applied as a 4% solution, and the other permits bleach (sodium hypochlorite) to be used in a solution of 3 parts bleach to 2 parts water. Information on these Section 18 actions is attached.

Attachments:

1. APHIS Veterinary Series Area Offices and State Veterinarians
2. Copies of EPA-approved labels for Virkon S (April 26, 2001) and Oxonia Active (May 11, 2001) and associated Material Safety Data Sheets
3. Section 18s for Acetic Acid and Sodium Hypochlorite (Bleach)

Disclaimer

The discussion in this document is intended solely as guidance. This document is not a regulation. It does not impose legally binding requirements on EPA, states, or the regulated community. This guidance does not confer legal rights or impose legal obligations upon any member of the public. The general description provided here may not apply to a particular situation based on the circumstances. Interested parties are free to raise questions and objections about the substance of this guidance and the appropriateness of the application of this guidance to a particular situation. EPA retains the discretion to adopt approaches on a case-by-case basis that differ from those described in this guidance where appropriate. This document may be revised periodically without public notice. EPA welcomes public input on this document at any time.

Appendix BB

NPDES CAFO Permit NMP Nine Minimum Standards Review Checklist

This page intentionally left blank.

NPDES CAFO Permit NMP Nine Minimum Standards Review Checklist

The checklist is composed of three parts which are to be completed as follows:

Part A **Summary Information**
Documents critical information concerning the operation.

Part B **Detailed Plan Review and On-Site Inspection Checklist**
To be completed when reviewing a plan or during an on-site inspection of the operation.

Part A - Summary Information

1. Plan Preparer Certification

- Was the plan prepared by a certified nutrient management specialist? ..... ☐ Yes ..... ☐ No
- Is the name and certification credentials of the plan preparer identified in the plan? ..... ☐ Yes ..... ☐ No

2. Type of Operation

- Is the facility operated ☐ Year Round ☐ Seasonally

  Notes: _____

- Is the operation ☐ Open lot ☐ Partially enclosed ☐ Fully enclosed.

  Notes: _____

- Does the description of the facility in the plan reflect the description of the facility in the application/NOI/Fact Sheet/Permit? ..... ☐ Yes ..... ☐ No

3. Facility Maps

- Does the plan include maps that identify topography, soil types, confinement areas, manure and wastewater storage, raw material storage, handling, and treatment facilities, and environmentally sensitive areas (sinkholes, wells, drinking water sources, field tile drain outlets) for the production area and all land application areas owned or under the ownership, rental, lease, other legal arrangement of the CAFO operator? ..... ☐ Yes ..... ☐ No ✘
- Does the plan identify the watershed(s) in which the operation is located including latitude and longitude to the entrance of the production area? ..... ☐ Yes ..... ☐ No
- Is this watershed listed on the States list of impaired watersheds? ..... ☐ Yes ..... ☐ No

  If yes, what impairments are identified? _____

- Is this facility located in a state designated source water protection area? ..... ☐ Yes ..... ☐ No
- Are there any other water quality problems in this watershed? ..... ☐ Yes ..... ☐ No

  Explain: _____

✘ = Questions where a "no" answer may indicate that the facility may be in violation of permit requirements. A "no" answer may also indicate that the NMP is deficient.

4. Animals

- What type of animals are confined at the facility?

☐ Beef (slaughter/feeder) ☐ Chicken – Layer
☐ Dairy ☐ Chicken – Broiler
☐ Swine ☐ Sheep/lambs
☐ Turkey ☐ Horse
☐ Other _____ ☐ Duck

- What is the design capacity by animal type?

☐ Beef (slaughter/feeder) _____ ☐ Chicken – Layer _____
☐ Dairy _____ ☐ Chicken – Broiler _____
☐ Swine _____ ☐ Sheep/lambs _____
☐ Turkey _____ ☐ Horse _____
☐ Other _____ ☐ Duck _____

- Is the plan based upon the design capacity? ..... ☐ Yes ..... ☐ No

If no, what capacity is the plan based upon? _____

_____

_____

- Does the plan identify the size (acres) of the production area? ☐ Yes _____ acres ☐ No

5. Manure/Litter/Process Watewater Generation

- What are the manure generation rates for N, P, and K identified in the plan?

Animal Type 1 ..... N_____ lbs/Year ✘ P_____ lbs/Year ✘ K_____ lbs/Year

Animal Type 2 ..... N_____ lbs/Year ✘ P_____ lbs/Year ✘ K_____ lbs/Year

Animal Type 3 ..... N_____ lbs/Year ✘ P_____ lbs/Year ✘ K_____ lbs/Year

- What are the manure generation rates for N, P, and K rates based upon?

☐ Current year manure analysis from this operation

☐ Historical manure analysis from this operation [Note Year(s): _____]

☐ Book value [Note Source: _____]

- Are the generation rates for N, P, and K generally consistent with USDA's Agricultural Waste Management Field Handbook? ..... ☐ Yes ..... ☐ No

If no, are other practices in place that account for the rates included in the plan? ..... ☐ Yes ..... ☐ No

What are the practices identified in the plan? ..... ☐ Feed Management ..... ☐ Other

Explain: _____

_____

_____

If no, are atmospheric N losses used in the plan excessive? ..... ☐ Yes ..... ☐ No

✘ = Questions where a "no" answer may indicate that the facility may be in violation of permit requirements. A "no" answer may also indicate that the NMP is deficient.

6. Manure Utilization Options

- What manure utilization options are identified in the plan? (*Note if more than one option is identified in the plan indicate the relative amount of the manure/wastewater utilized under this option*)

  Land Application ..... ☐ Yes _____% ..... ☐ No

  If yes: how many acres of land owned or under the control of the applicant are available for applying manure/wastewater generated by the CAFO? _____ acres.

  Do the facility maps identify the fields or conservation management units (CMU) used to develop the plan? (Field boundaries, field number, acreage) ..... ☐ Yes ..... ☐ No ✗

  Composting ..... ☐ Yes _____% ..... ☐ No

  Incineration ..... ☐ Yes _____% ..... ☐ No

  If yes, does the plan address what is done with the remaining ash _____

  _____

  _____

  Other ..... ☐ Yes _____% ..... ☐ No

  Describe *(as needed)* _____

  _____

- Is manure generated at the CAFO sold/given away for use at another location not associated with the generating CAFO? ..... ☐ Yes ..... ☐ No

  If yes, what is the estimated amount transferred annually? _____ tons

7. Crop Production

- Does the plan identify what crops are produced? ..... ☐ Yes ..... ☐ No ✗

  What are they? _____

- Does the plan identify the crop rotations (if any)? ..... ☐ N/A .... ☐ Yes ..... ☐ No

  What is the crop rotation?_____

  _____

  _____

- Does the plan identify cropping practices? ..... ☐ Yes ..... ☐ No

  If yes, what are they? ☐ Ridge Till ☐ Conservation Tillage
  ☐ Other _____

- Does cropping system use irrigation? ..... ☐ Yes ..... ☐ No

  If yes, what type: ☐ Flood ☐ Sprinkler
  ☐ Overland ☐ Center Pivot
  ☐ Ridge and furrow ☐ Traveling Gun

- Is crop/rotation information provided in the plan for each field/CMU? ..... ☐ Yes ..... ☐ No
- Are realistic crop yield goals identified in the plan? ..... ☐ Yes ..... ☐ No
- What source of information was used by to determine the realistic yield goals for this operation?

  ☐ Farm Records (*Circle One:* last year's crop and production, 3-year average, 5-year average)
  ☐ USDA ☐ State Databases (VALUES, MASCAP)
  ☐ County Averages ☐ Previous crop insurance records

- Is adequate justification provided to support the yield goal. ..... ☐ Yes ..... ☐ No

✗ = Questions where a "no" answer may indicate that the facility may be in violation of permit requirements. A "no" answer may also indicate that the NMP is deficient.

8. **Nutrient Application**

- Does the plan identify the basis/rationale for determining an N-based or P-based application rate? ..... ☐ Yes ..... ☐ No ✘

  What is the basis? ☐ State Regulations/Nutrient Management Technical Standard ..... ☐ NRCS Code 590

  ☐ Other _____

- Does the plan identify the application method? ..... ☐ Yes ..... ☐ No ✘

  If yes, what method is used: ☐ Surface applied ☐ Injected ☐ Incorporated

- Does the NMP reference the correct State Nutrient Management Technical Standard identified in the permit? ..... ☐ Yes ..... ☐ No ✘

- Does the plan include land application areas that are N-based and others that are P-based? ..... ☐ Yes ..... ☐ No

9. **25-Year, 24-Hour Storm Information***

- Does the plan utilize the correct 25-Year, 24-Hour rainfall amount for the location of this operation to determine storage requirements?* ..... ☐ Yes ..... ☐ No ✘

  Note source of information _____

Additional Comments: _____

_____

_____

_____

_____

* Some facilities are required to design storage impoundments based on a 100-year, 24-hour storm.

Part B - Detailed Plan Review and On-Site Inspection Checklist.

Minimum Standard #1 Ensure Adequate Storage Capacity

Plan Review

- Does the plan identify the volume and duration of storage required for the facility? ..... ☐ Yes ..... ☐ No ✘
- Does the storage volume in the plan account for manure and process wastewater in addition to the collection of runoff and the 25-year/24-hour storm event for the CAFO location? (Note: New source swine, poultry, and veal operations use a 100-year/24-hour storm) ..... ☐ Yes ..... ☐ No ✘
- Are storage structures constructed and operated in accordance with the ELG? ..... ☐ Yes ..... ☐ No ✘
- Does the plan include a schedule for cleaning out the storage structures or solids removal for liquid storage structures? ..... ☐ Yes ..... ☐ No ✘
- Does the plan require maintenance for all storage structures? ..... ☐ Yes ..... ☐ No ✘

On-Site Inspection

- Is a depth marker in place in all lagoons and other appropriate storage structures? ..... ☐ Yes ..... ☐ No ✘
- Is adequate lagoon storage volume being maintained? ..... ☐ Yes ..... ☐ No ✘
- Is the length of storage documented in on-site records consistent with storage practices identified in the plan? ..... ☐ Yes ..... ☐ No

✘ = Questions where a "no" answer may indicate that the facility may be in violation of permit requirements. A "no" answer may also indicate that the NMP is deficient.

Minimum Standard #2 Ensure Proper Management of Mortalities

Plan Review

- Is animal mortality addressed in the plan. ..... ☐ Yes ..... ☐ No ✗

  If yes, what methods are identified in the plan to address animal mortality?
  ☐ Rendering ☐ Incineration ☐ Composting ☐ Disposal pits
  ☐ Landfill ☐ Other _____

- Does the plan address mortality storage prior to final disposition? ..... ☐ Yes ..... ☐ No
- Is the mortality rate used in the plan consistent with USDA expected values for the animals confined at the operation? ..... ☐ Yes ..... ☐ No
- Does the animal mortality plan meet State requirements? ..... ☐ N/A .... ☐ Yes ..... ☐ No ✗

On-Site Inspection

- Are the animal mortality disposal methods and equipment identified in the plan in place and being properly implemented? ..... ☐ Yes ..... ☐ No ✗

Minimum Standard #3 Divert Clean Water From Production Area

Plan Review

- Does the plan include provisions that address the diversion of clean water from the production areas? ..... ☐ Yes ..... ☐ No

  If no why? _____

  _____

  If no, is the runoff being collected and is storage of runoff adequate? (See Minimum Standard No. 8) ..... ☐ Yes ..... ☐ No

- Does the plan require periodic visual inspection to verify proper and functional diversion? ..... ☐ Yes ..... ☐ No
- Does the plan address the maintenance of diversion structures? ..... ☐ Yes ..... ☐ No

On-Site Inspection

- Are the diversion provisions identified in the plan being properly implemented? ..... ☐ Yes ..... ☐ No
- Is the storage capacity sufficient for all non-diverted runoff? ..... ☐ Yes ..... ☐ No
- Are records of periodic inspections being maintained? ..... ☐ Yes ..... ☐ No
- How often are operator inspections being conducted? (*Circle one:* Daily Weekly Monthly)

Minimum Standard #4 - Prevent Direct Contact

Plan Review

- Does the facility or topo map identify any surface water in the production area? ..... ☐ Yes ..... ☐ No

  If yes, are measures in the plan to prevent direct contact? ..... ☐ Yes ..... ☐ No ✗

  What are the measures identified in the plan? ☐ Fences ☐ Other

On-Site Inspection

- Is there surface water in the production area? ..... ☐ Yes ..... ☐ No
- Are the measures identified in the plan being implemented and maintained to prevent direct contact? ☐ Yes ..... ☐ No ✗
- Are there any animals in contact with surface water in the production area? ..... ☐ Yes ..... ☐ No

✗ = Questions where a "no" answer may indicate that the facility may be in violation of permit requirements. A "no" answer may also indicate that the NMP is deficient.

Minimum Standard #5 Chemical Handling

Plan Review

- Has the facility incorporated measures (in accordance with applicable laws and regulations) to prevent the mishandling of pesticides, hazardous and toxic chemicals, and petroleum products/by-products from contaminating manure and wastewater? ..... ☐ Yes ..... ☐ No

  If no, explain: _____

On-Site Inspection

- Are the measures identified being implemented? ..... ☐ Yes ..... ☐ No
- Is there any evidence of mishandling of pesticides, hazardous and toxic chemicals, and petroleum products/by-products contaminating manure and wastewater storage. ..... ☐ Yes ..... ☐ No

Notes: _____

_____

Minimum Standard #6 Conservation Practices to Reduce Nutrient Loss

Plan Review

- Does the plan include the use of best management practices (BMPs) to control runoff from the:

  Production area ..... ☐ N/A .... ☐ Yes ..... ☐ No

  Land application area(s) ..... ☐ N/A .... ☐ Yes ..... ☐ No

- Do the plan and facility maps identify the specific areas that the BMPs are to be applied?

Land Application Areas	**Production Area**
☐ Vegetated Buffers (Type of vegetation _____)	☐ (Type of vegetation _____)
☐ Diversion	☐
☐ Grassed Waterway (Type of vegetation _____)	
☐ Strip Cropping	
☐ Residue Management	
☐ Terracing	
☐ Conservation Tillage	

- If any of these BMPs are being used does the plan specify how they are to be implemented? ..... ☐ Yes ..... ☐ No

  If yes, what does the plan require? _____

  _____

- What references are cited for the practices? ☐ USDA Practice Standards ☐ State Standards

  ☐ Other _____ (*Note: to be used to verify proper implementation*)

- Does the plan include O&M requirements for practices used to reduce nutrient loss? ..... ☐ Yes ..... ☐ No

On-Site Inspection

- Are the nutrient loss minimization practices in the plan being properly implemented? ..... ☐ Yes ..... ☐ No ✗
- If buffers are being used, are the widths in agreement with those identified in the plan? ..... ☐ Yes ..... ☐ No
- Is there any evidence of buffers being breached by waste or evidence of erosion? ..... ☐ Yes ..... ☐ No

✗ = Questions where a "no" answer may indicate that the facility may be in violation of permit requirements. A "no" answer may also indicate that the NMP is deficient.

Minimum Standard #7 Protocols for Manure and Soil Testing

Plan Review

- Does the plan include specific protocols for the sampling and analysis of manure, wastewater and soil for determining nutrient content? ☐ Yes ☐ No ✗
- Are these protocols recognized by the State or identified in the State Nutrient Management Technical Standard? ☐ Yes ☐ No ✗
- Does the plan identify the sampling frequency for manure and soil sample analysis? ☐ Yes ☐ No ✗

  (At a minimum manure samples are to be taken annually and tested for nitrogen and phosphorous and soil samples taken and tested for phosphorous at least once every 5 years.)

On-Site Inspection

- Were the manure/wastewater and soil samples taken within 12 months of developing the site-specific NMP? ☐ Yes ☐ No
- Have manure and soil samples been collected at a frequency that is consistent with permit requirements? ☐ Yes ☐ No
- Are the sampling protocols consistent with permit requirements or those specified in the state nutrient management technical standard? ☐ Yes ☐ No

  (At a minimum manure samples are to be taken annually and tested for nitrogen and phosphorous and soil samples taken and tested for phosphorous at least once every 5 years.)
- Are the results of the sample analysis consistent with the content and analyses of the NMP? ☐ Yes ☐ No

Minimum Standard #8 - Protocols for Land Application of Manure and Wastewater

Plan Review

- What is the number of acres owned/acres leased or subject to an access agreement to be used for land application identified in the plan? _____acres owned _____acres leased _____acres applied
- Does the plan identify weather and soil conditions under which application activities will not be conducted (e.g., frozen ground)? ☐ Yes ☐ No
- Does the plan include a proper analysis to determine whether application rates are to be based upon N or P for each management unit? ☐ Yes ☐ No ✗
- Is the analysis consistent with the State Nutrient Management Technical Standard identified in the permit or approved by the Director of the permitting authority? ☐ Yes ☐ No ✗
- Does the plan take into account other sources of nutrients used at the operation? ☐ Yes ☐ No ✗

  If yes, what other sources of nutrients have been accounted for:

  ☐ Commercial Fertilizer ☐ Biosolids
  ☐ Bedding ☐ Legume Credits
  ☐ Wastewater ☐ Previous manure applications
  ☐ Other _____

- Does the plan include the application of wastewater to fields via an irrigation system? ☐ Yes ☐ No

  If yes:
  - → Does the plan identify the type of irrigation system? ☐ Yes ☐ No
  - → Are the nutrients contributed by the irrigation system accounted for in the nutrient budget for the operation? ☐ Yes ☐ No
  - → Does the plan include provisions to minimize ponding or puddling of wastewater on land application fields? ☐ Yes ☐ No
  - → Does the plan address the management of drainage water to prevent surface or ground water contamination? ☐ Yes ☐ No

✗ = Questions where a "no" answer may indicate that the facility may be in violation of permit requirements. A "no" answer may also indicate that the NMP is deficient.

- Does the plan identify the crop rotation system, crop nutrient requirements based on soil testing, realistic yield goals*, and crop nutrient removal? ..... ☐ Yes ..... ☐ No ✘
- Does the plan include restrictions or adequate management practices to prevent water pollution from the application of manure/wastewater to flooded, saturated, frozen, or snow covered ground? ..... ☐ Yes ..... ☐ No
- Does the plan address specific pumping and clean out schedules for all liquid storage structures? ..... ☐ Yes ..... ☐ No
- Does the plan require records to be maintained that document the date, location, weather, and application rate of manure and wastewater that is land applied? ..... ☐ Yes ..... ☐ No ✘
- Is there sufficient land owned or under the control of the operator to properly utilize all manure and wastewater generated by the operation? ..... ☐ Yes ..... ☐ No

  If no:
  - → Does the plan identify the quantity of excess manure being generated? _____tons/year or gallons/year
  - → Does the plan identify how the excess manure is to be utilized? _____
  - → Is excess manure/wastewater to be transferred off-site? ..... ☐ Yes ..... ☐ No

  If yes:
  - → Does the plan include the necessary arrangements for this transfer? ..... ☐ Yes ..... ☐ No
  - → Does the plan identify the recipients? ..... ☐ Yes ..... ☐ No
- Does the plan address the maintenance of land application equipment? ..... ☐ Yes ..... ☐ No
- Does the plan identify the manure application method to be used? ..... ☐ Yes ..... ☐ No
- Does the plan require periodic calibration of manure application equipment. ..... ☐ Yes ..... ☐ No
- Are the application rates identified in the plan appropriate? ..... ☐ Yes ..... ☐ No

Notes: _____

_____

_____

On-Site Inspection

- Does the plan reflect the current operational characteristics (number of animals, cropping, etc.)? ☐ Yes ..... ☐ No ✘
- Are the number of acres owned/acres leased consistent with those identified in the plan? ..... ☐ Yes ..... ☐ No ✘
- Is the crop rotation consistent with that identified in the plan used to determine application rates and timing? ..... ☐ Yes ..... ☐ No
- Is the application equipment being used consistent with the equipment identified in the plan? ..... ☐ Yes ..... ☐ No
- Is the land application equipment being used appropriate? ..... ☐ Yes ..... ☐ No
- Is the amount of manure/wastewater being transferred off-site consistent with the amount identified in the plan? ..... ☐ Yes ..... ☐ No
- Are records (name and address of recipient and amount) of off-site manure disposal being maintained (if required)? ..... ☐ Yes ..... ☐ No
- Is manure and wastewater being applied within a 100' setback or within a 35' vegetated buffer to any down gradient surface waters, open tile line intake structures, agricultural well heads or other conduits to surface waters? ..... ☐ Yes ..... ☐ No ✘

* or other documented recommendation from local extension or other source)

✘ = Questions where a "no" answer may indicate that the facility may be in violation of permit requirements. A "no" answer may also indicate that the NMP is deficient.

Minimum Standard #9 - Recordkeeping

Plan Review

- Identify the required records that the plan identifies are to be maintained at the facility.
  - ☐ Manure and wastewater sample nutrient analysis results
  - ☐ Soil sample analysis results that the plan was based upon for all land application areas (Dates of sample: ___/___/___, ___/___/___, ___/___/___, ___/___/___, ___/___/___)
  - ☐ Manure/wastewater storage - date of emptying, level before emptying, and level after emptying, or quantity removed (dry manure)
  - ☐ Storage facility level (weekly)
  - ☐ Inspection log (stormwater diversions, runoff control structures, water lines, surface impoundments, and manure application equipment)
  - ☐ Maintenance log of all equipment necessary to control discharge and meet permit requirements (e.g., maintenance of land application equipment)
  - ☐ Crop planting/harvest dates by field or CMU
  - ☐ Crop type and yield by field or CMU - bushels/acre (seasonally)
  - ☐ Total amount of N and P applied - date, time, and rate (lbs/acre, gallons/acre), weather condition, application method, and equipment used by field or CMU (daily)
  - ☐ On-site precipitation
  - ☐ Animal Inventory
  - ☐ Lease/Rental/Access Agreements for all land not owned by the operator
  - ☐ Name and address of recipients and quantity of manure transferred off-site
- Does the plan require any additional records be maintained at the facility? ..... ☐ Yes ..... ☐ No

  If yes, what are these records?_____

  _____
- Does the plan include an emergency action plan to address spills and catastrophic events? ..... ☐ Yes ..... ☐ No

On-Site Inspection

- Are all of the records identified in the plan being maintained and kept current? ..... ☐ Yes ..... ☐ No ✘

  If no, explain:_____

  _____
- Are records being maintained at the required frequency? ..... ☐ Yes ..... ☐ No

  If no, explain:_____

  _____
- Are records being maintained on-site for the period required by the permit? ..... ☐ Yes ..... ☐ No

  If no, explain:_____

  _____
- Do the records include the date, time and estimated volume of any overflows? ..... ☐ Yes ..... ☐ No

✘ = Questions where a "no" answer may indicate that the facility may be in violation of permit requirements. A "no" answer may also indicate that the NMP is deficient.

Plan Adequacy/Discharge Potential

- Is the plan adequately addressing the storage, handling, and application of manure and wastewater to prevent the discharge of pollutants to waters of the US? ..... ☐ Yes ..... ☐ No ✘
- Is there evidence of a past discharge? ..... ☐ Yes ..... ☐ No

  If yes, what evidence was identified? _____

- Is there any evidence of discharges to waters of the US from other activities at the operation? .... ☐ Yes ..... ☐ No

  If yes, what evidence was identified? _____

- Is there a risk of a future violation of permit conditions? ..... ☐ Yes ..... ☐ No

  If yes, what is the basis for this determination? _____

- Does the plan require revision? ..... ☐ Yes ..... ☐ No

  If yes, what specific components of the plan require revision? _____

Additional Comments: _____

✘ = Questions where a "no" answer may indicate that the facility may be in violation of permit requirements. A "no" answer may also indicate that the NMP is deficient.

APPENDIX CC

INTEGRATED COMPLIANCE INFORMATION SYSTEM (ICIS) SCREEN SHOTS

This page intentionally left blank.

9.1.4 Compliance Monitoring

The Compliance Monitoring screens capture data on information requests, compliance inspections, compliance investigations, and off-site record reviews. These screens incorporate data elements from the Inspection Conclusion Data Sheet (ICDS) and Enforcement and Compliance data standards. All available information is initially entered through the Add Compliance Monitoring screen (Figure 9.1.4-1). When the user saves the data on the Add Compliance Monitoring screen, the Compliance Monitoring Detail (Figure 9.1.4-2) screen is displayed. Data can be added or updated as required via the Compliance Monitoring Detail screen. The Compliance Monitoring Detail screen is also displayed when the user clicks on a Compliance Monitoring link on the All Compliance Monitoring screen (Section 9.3.3) to edit a particular activity. Fields and button functionality for the Add Compliance Monitoring and Compliance Monitoring Detail screens are described in Table 9.1.4-1 and Table 9.1.4-2 respectively.

See Section 8 (i.e., Common Objects) for a discussion of left side menu topics (i.e., Sub Activities, Related Activities, Facility, Contacts, Regional Fields).

Figure 9.1.4-1: Add Compliance Monitoring Screen

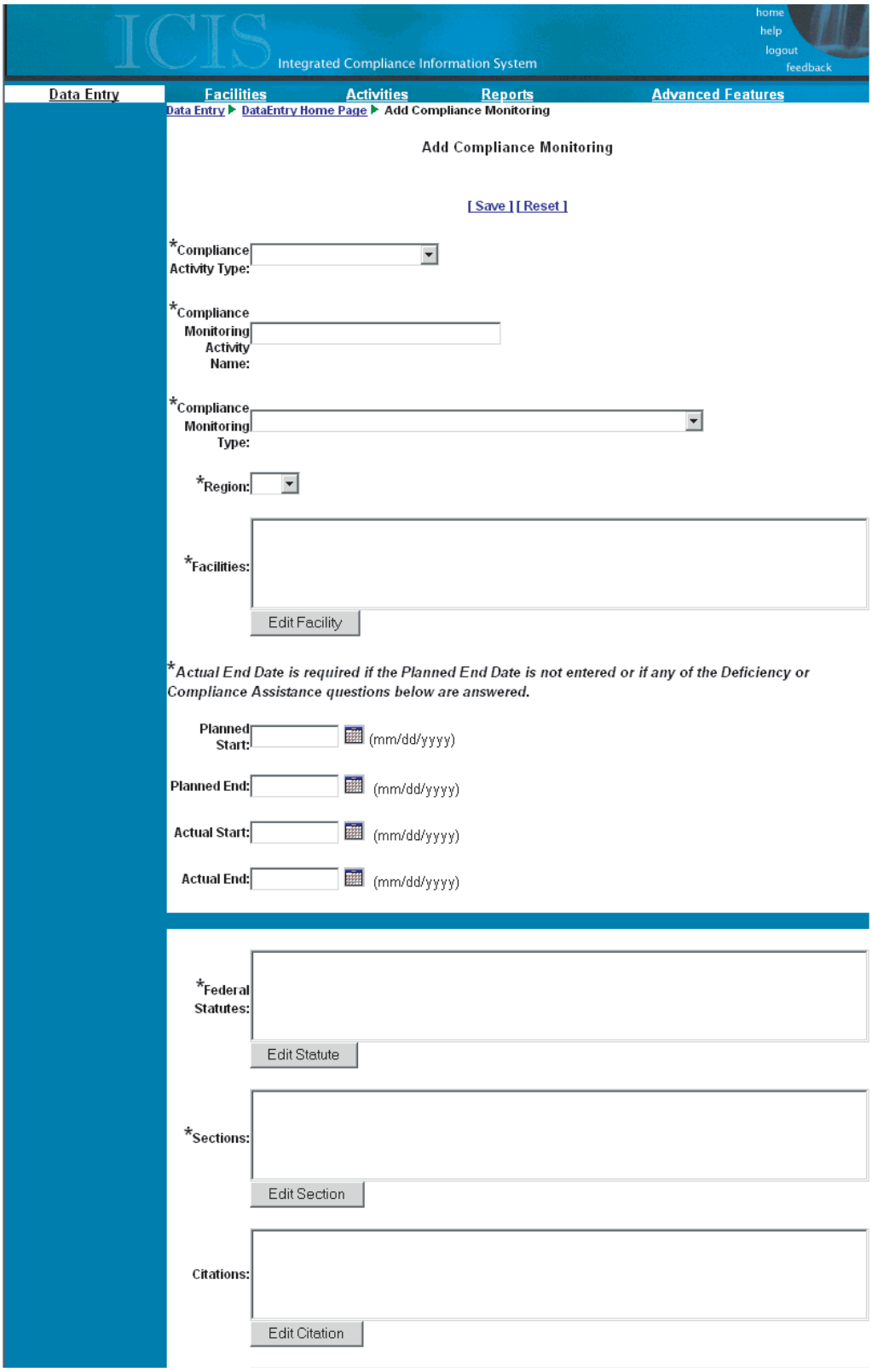

Programs:

SIC Code:

Edit SIC

NAICS Code:

Edit NAICS

Media Monitored:

*Compliance Monitoring Action Reason:

Edit Reason

*Compliance Monitoring Agency Type: U.S. EPA

Edit Agency Code

If State, Local or Tribal Lead, did EPA assist:

Number of Days Physically Conducting Activity:

Number of Hours Physically Conducting Activity:

Compliance Monitoring Action Outcome:

MOA Priorities:

Edit MOA Priorities

Regional Priorities:

Edit Regional Priorities

Inspector:

Edit Inspector

Coordinated: ☐

Consolidated: ☐

Did you observe deficiencies (potential violations) during the on-site inspection?

○ Yes (if yes, you must answer the following two questions)

○ No (if no, you cannot answer the following two questions)

Deficiencies:

Edit Deficiency

If you observed deficiencies, did you communicate them to the facility during the inspection?

○ Yes (if yes, you must answer the next question)

○ No (if no, you cannot answer the next question)

Did you observe or see the facility take any actions during the inspection to address the deficiencies noted?

○ Yes (if yes, identify the actions taken)

○ No

If Yes, What Actions Were Taken:

Edit Actions Taken

Water Pollutants:

Edit Water Pollutants

Air Pollutants:

Edit Air Pollutants

Did you provide general compliance assistance in accordance with the policy on the Role of the EPA Inspector in Providing Compliance Assistance During inspections? ○ Yes ○ No

Did you provide site-specific compliance assistance in accordance with the policy on the Role of the EPA Inspector in Providing Compliance Assistance During inspections? ○ Yes ○ No

Summary Comments:

Save Reset

Data Entry Facilities Activities Reports Advanced Features

Figure 9.1.4-2: Compliance Monitoring Detail Screen

ICIS Integrated Compliance Information System

home
help
logout
feedback

Data Entry | Facilities | Activities | Reports | Advanced Features

Sub Activities
Related Activities
Facility
Contacts
Regional Fields

Activities ▸ All Compliance Monitoring Activity ▸ Compliance Monitoring Detail

Compliance Monitoring Detail

[Save] [Reset] [Delete] [Add Compliance Determination]

Facility Name: MASTERCRAFT CABINETS INCORPORATED
Facility ID: 51269
Street Address: 3550 ODESSA WAY
City: AURORA
State: CO
Program ID: 51269

*Compliance Activity Type: Compliance Inspection

*Compliance Monitoring Activity Name: EPA CAA Overview Inspection

*Compliance Monitoring Type: Oversight Inspection

*Region: 08

*Facilities: ICIS 51269 - MASTERCRAFT CABINETS INCORPORATED - 3550 ODESSA WAY,AURORA,CO

Edit Facility

*Actual End Date is required if the Planned End Date is not entered or if any of the Deficiency or Compliance Assistance questions below are answered.

Planned Start: (mm/dd/yyyy)

Planned End: (mm/dd/yyyy)

Actual Start: 08/30/1999 (mm/dd/yyyy)

Actual End: (mm/dd/yyyy)

*Federal Statutes: CAA - Clean Air Act

Edit Statute

*Sections: CAA - 112D - MACT Standards

Edit Section

Citations:

Edit Citation

Programs: National Emission Standards for Hazardous Air Pollutants (NESHAPs)

SIC Code: 1751 - Carpentry Work

Edit SIC

NAICS Code:

Edit NAICS

Media Monitored:

*Compliance Monitoring Action Reason:

Edit Reason

*Compliance Monitoring Agency Type: U.S. EPA

Edit Agency Code

If State, Local or Tribal Lead, did EPA assist: ☐

Number of Days Physically Conducting Activity:

Number of Hours Physically Conducting Activity:

Compliance Monitoring Action Outcome:

MOA Priorities:

Edit MOA Priorities

Regional Priorities:

Edit Regional Priorities

Multimedia Indicator: ☐

Coordinated: ☐

Consolidated: ☐

Related Multimedia Actions

Actual Date	Activity Name	Activity Type	Facility Name	Programmatic ID

Did you observe deficiencies (potential violations) during the on-site inspection?

○ Yes (if yes, you must answer the following two questions)

○ No (if no, you cannot answer the following two questions)

Deficiencies:

Edit Deficiency

If you observed deficiencies, did you communicate them to the facility during the inspection?

○ Yes (if yes, you must answer the next question)

○ No (if no, you cannot answer the next question)

Did you observe or see the facility take any actions during the inspection to address the deficiencies noted?

○ Yes (if yes, identify the actions taken)

○ No

If Yes, What Actions Were Taken:

Edit Actions Taken

Water Pollutants:

Edit Water Pollutants

Air Pollutants:

Edit Air Pollutants

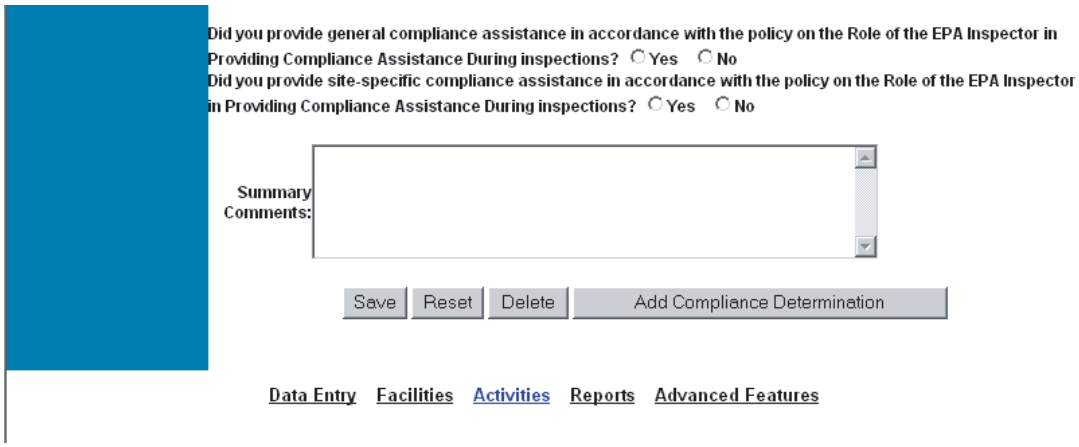

Table 9.1.4-1: Compliance Monitoring Fields

Field	Description	Business Rules/Instructions
Facility Name Facility ID Street Address City State Program ID.	These fields identify the facility site that is related to the compliance monitoring activity.	Facility information is display only and only appears on the Detail screen. These fields are blank when the screen is initially displayed after adding the activity through the Add Compliance Monitoring screen. They are populated as a result of the user linking a facility to the activity using the Facility side menu option. If multiple facilities are linked to the activity, data for the first facility that was linked are displayed.

Field	Description	Business Rules/Instructions
Compliance Activity Type	This is the type of compliance monitoring action taken by a regulatory agency (i.e., Information Request, Off-site Review). A drop-down list of valid values is provided, which contains:* • Information Request - An enforceable, written request for information to a regulated entity or potentially regulated entity about a site, facility, or activity. Examples include issuance of a subpoena for the production of documents or testimony, or a requirement that a facility conduct testing or sampling (e.g., a stack test). • Compliance Inspection - A visit to a facility or site for the purpose of gathering information to determine compliance including direct observations of facility operations. Examples include inspections pursuant to a search warrant or an order in aid of access; inspections at a regulated entity's office location; and off-site observations of a facility or site. • Compliance Investigation - An extraordinary, detailed assessment of a regulated entity's compliance status. • Off-site Record Review - A review of records, conducted at the government agency's offices, for the purpose of reviewing information to determine compliance of a regulated entity. Examples include the review of the reports of facility-conducted testing or sampling tests submitted by the regulated entity; the review of self-reported information from regulated entities, including information required to be submitted (e.g., Discharge Monitoring Report [DMR] or CAA Title V self-certifications) and voluntarily submitted information. • Voluntary Disclosure – The voluntary submission of information regarding a potential violation. *Note: Definition of terms is not provided in the drop-down list.	• Compliance Activity Type only appears on the Add Compliance Monitoring screen. The user cannot modify Compliance Activity Type once the activity is saved. • Compliance Activity Type is required; the user must select a value from the drop-down list. • If the user selects Voluntary Disclosure, the alert, 'You have made a request that will take you to another Page. All changes on this page will be lost.', is displayed. The user then has the option of clicking OK to display the Voluntary Disclosure Detail screen or Cancel to return to the Add Compliance Monitoring screen.

Field	Description	Business Rules/Instructions
Compliance Monitoring Activity Name	This is the name given to the Compliance Monitoring activity to allow users to identify the Compliance Monitoring data. This field is a concatenation of the name that the user entered through the Add screen and the statute code that they selected.	Compliance Monitoring Activity Name is required. The user must enter a name in this field.
Compliance Monitoring Type	This is a description of the type of Compliance Monitoring activity taken by a regulatory Agency. Inspections to determine the compliance of a facility or regulated entity with the terms of a previously issued enforcement instrument are included here. A drop-down list of valid values is provided.	• Compliance Monitoring Type is a required field. The user must select a value from the drop-down list. • The contents of the drop-down list are filtered based on the value of Compliance Activity Type.
Region	This is the EPA region associated with the monitoring activity. A drop-down list of valid values is provided on the Add screen.	Region is required: • Add screen: – For regional users, Region defaults to the login user's region as determined through their roles. – Headquarters users or users affiliated with more than one region must select a region from the drop-down list. • Detail screen: Region is display only and defaults to the region that was entered/defaulted to on the Add screen.
Planned Start	This is the date that the Compliance Monitoring action is planned to begin.	The user may enter Planned Start by using the calendar icon to select a date from the calendar pop-up or by typing a date directly in the field. If entered, Planned Start: • Must be a valid date in mm/dd/yyyy format • Can be a past, current, or future date • Cannot be after the Planned Completion date.
Planned Completion	This is the date that the Compliance Monitoring action is planned to end.	The user may enter Planned Completion by using the calendar icon to select a date from the calendar pop-up or by typing a date directly in the field. If entered, Planned Completion: • Must be a valid date in mm/dd/yyyy format • Can be a past, current, or future date • Cannot be prior to the Planned Start Date.

Field	Description	Business Rules/Instructions
Actual Start	This is the date that the Compliance Monitoring action was performed or conducted (i.e., ICDS - Date of Inspection).	The user may enter Actual Start by using the calendar icon to select a date from the calendar pop-up or by typing a date directly in the field. If entered, Actual Start: • Must be a valid date in mm/dd/yyyy format • Can be a past or current date • Cannot be a future date • Cannot be greater than the Actual Completion date.
Actual End	This is the actual date on which the Compliance Monitoring activity was completed.	The user may enter Actual End by using the calendar icon to select a date from the calendar pop-up or by typing a date directly in the field. If entered, Actual End: • Must be a valid date in mm/dd/yyyy format • Can be a past or current date • Cannot be a future date • Date cannot be prior to the Actual Start date.
Federal Statutes	This is the law(s) that is permitting the Compliance Monitoring action.	• Federal Statutes is a required field. The user must click on the Edit Statutes button to select one or more statutes from the resulting multi-select pop-up window. • Statutes are filtered based on the Program(s) to which the user is affiliated through their role(s). • To create a multi-media activity, the user must select multiple statutes, as well as at least one corresponding section for each statute selected. • When multiple statutes are saved, individual compliance monitoring activities are created for each statute and are displayed on separate Compliance Monitoring Detail screens.
Sections	This is the section(s) of law(s) that is authorizing the Compliance Monitoring action.	• Sections is a required field. The user must click on the Edit Sections button to select one or more sections from the resulting multi-select pop-up window. • Sections are filtered based on both the Program(s) to which the user is affiliated through their role(s) as well as the selected statutes. • The user must select at least one section for a listed statute for that statute to be saved with the activity. • To create a multi-media activity, the user must select multiple statutes, as well as at least one corresponding section for each statute selected.

Field	Description	Business Rules/Instructions
Citations	This is the Code of Federal Regulations (CFRs) that permits the monitoring action. Citation is composed of three components: • Title • Part • Section.	Citations is an optional field; however, to add one or more citations to the activity, the user: • Must click on the Edit Citations button to display the Citations data entry pop-up window • Must enter data in each of the three components (Title on the first citation defaults to 40 CFR; however, the user may edit this value) • May enter up to five citations at a time. To add more than five citations, the user must once again click on the Edit Citations button.
Programs	This is the EPA program applicable to the monitoring activity.	Programs is display only and is automatically populated based on the Section(s) that the user selects.
SIC	This is the 4-digit Standard Industrial Classification (SIC) code that represents the economic activity of a company.	SIC is an optional field; however, to enter data in this list box, the user must click on the Edit SIC button to select one or more SICs from the resulting multi-select pop-up window.
NAICS	This is the 6-digit code that represents a subdivision of an industry that accommodates user needs in the United States.	NAICS is an optional field; however, to enter data in this list box, the user must click on the Edit NAICS button to select one or more NAICS from the resulting multi-select pop-up window.
Media Monitored	This is the description of the media associated with the EPA programs. A drop-down list of valid values is provided.	The user selects a value from a drop-down list.
Compliance Monitoring Action Reason	This is the reason for performing a Compliance Monitoring action.	• Compliance Monitoring Action Reason is a required field. To enter data in this list box, the user must click on the Edit Reason button to select one or more Reasons from the resulting multi-select pop-up window. • Reasons are dependent on the Compliance Activity Type. If on the Add screen the user changes the Compliance Activity Type after selecting reasons but before saving, an alert is generated informing them that because the reasons are dependent on Compliance Activity Type, the previously selected values may no longer be valid and are being cleared. The users must then select new reasons. (This is not an issue on the Detail screen because Compliance Activity Type does not appear on that screen.)

Field	Description	Business Rules/Instructions
Compliance Monitoring Agency Type	This is the type of agency performing or conducting the Compliance Monitoring action. A drop-down list of valid values is provided. The list includes:* • U.S. EPA - United States Environmental Protection Agency • Other Federal - Another agency of the United States • State - State agency • Interstate - Interstate agency • Local - Local agency • Tribal - Tribal government agency. *Note: Acronyms are not spelled out in the drop-down list.	Compliance Monitoring Agency Type is required. The user must select a value from the drop-down list.
If State, Local, or Tribal lead, did EPA assist	This is a check box that is used to indicate whether or not EPA was the lead agency.	The default for this box is unchecked. The user cannot check this box if Compliance Monitoring Agency Type is U.S. EPA.
Length of Activity in days	This is the length of the monitoring activity in days (i.e., number of days to perform the inspection).	This field is optional; however, when populating this field, the user must enter a whole number (i.e., zero or higher).
Number of hours spent on the activity	This is the total number of hours spent on the monitoring activity (i.e., hours spent on the investigation).	This field is optional; however, when populating this field, the user must enter a whole number (i.e., zero or higher).
Compliance Monitoring Activity Outcome.	This is the result of the Compliance Monitoring action. A drop-down list of valid values is provided.	Compliance Monitoring Activity Outcome is optional; however, to enter a value in this field, the user must select that value from the drop-down list.
MOA Priorities	This is the name of the Memorandum of Agreement (MOA) associated with the activity.	• MOA Priorities is an optional field; however, to enter data in this list box, the user must click on the Edit MOA Priorities button to select one or more priorities from the resulting multi-select pop-up window. • Only current fiscal year priorities where Region is HQ are available to the user for selection.

Field	Description	Business Rules/Instructions
Regional Priorities	The name of the regional priority associated with the activity.	• Regional Priorities is an optional field; however, to enter data in this list box, the user must click on the Edit Regional Priorities button to select one or more priorities from the resulting multi-select pop-up window. • Only current fiscal year priorities affiliated with the entered/defaulted Region are available to the user for selection. • If on the Add screen the user changes the Region code after selecting regional priorities but before saving, an alert is generated informing them that because the priorities are dependent on region, the previously selected values may no longer be valid and are being cleared. The users must then either select new regional priorities or leave the field blank. (This is not an issue on the Detail screen because Region is display only and cannot be changed.)
Multi-media Indicator	This is a check box used to indicate that the Compliance Monitoring Action is a multi-media activity (i.e., a Compliance Monitoring Action designed to verify compliance with two or more distinct environmental programs conducted within a short time frame).	• Multi-media Indicator only appears on the Compliance Monitoring Detail screen and then only when the current activity is a multi-media activity. • This indicator is display only and defaults to checked.
Coordinated	This is a check box used to indicate whether or not no more than three months may have elapsed between the inspection by one program and a subsequent inspection by another program.	The default for this box is unchecked. To indicate that no more than three months may have elapsed between the inspection by one program and a subsequent inspection by another program, the user must check this box.
Consolidated	This is a check box used to indicate whether or not a single inspection covered two or more programs under different statutes.	The default for this box is unchecked. To indicate that a single inspection covered two or more programs under different statutes, the user must check this box.
Related Multimedia Actions: • Actual Date • Activity Name • Facility Name • Programmatic ID.	This section identifies, in tabular format, those activities that are related to the current activity through a multi-media action. It is populated when the user selects multiple statute/law section combinations on either the Add or Detail screen, thereby creating individual compliance monitoring activities for each selected statute.	• This section is display only and only appears on the Detail screen. • The user may click on the Activity Name link of a listed activity to display the Compliance Monitoring Detail screen for that named multi-media activity. • Each listed activity is linked to each of the other listed activities and is also listed in the Related Multimedia Actions sections on those activities' Detail screens.

Field	Description	Business Rules/Instructions
If you observed deficiencies during inspection, did you communicate the deficiencies to the facility at that time?	These radio buttons are used to identify whether or not the facility was made aware of the observed deficiencies according to regional policies.	The user has three options concerning these radio buttons: • To indicate that deficiencies were observed and communicated to the facility, the user must click on the Yes radio button. • To indicate that deficiencies were observed but not communicated to the facility, the user must click on the No radio button. • To indicate that deficiencies were not observed, the user must not select either radio button. The user must select either of the two radio buttons when Deficiencies are selected. (See below.)
Deficiencies	These are the deficiencies that were observed during the inspection.	• To enter data in this list box, the user must click on the Edit Deficiencies button to select one or more deficiencies from the resulting multi-select pop-up window. • The user must enter one or more deficiencies when either the Yes or No radio button is selected in answer to the question,' If you observed deficiencies during inspection, did you communicate the deficiencies to the facility at that time?' • The user cannot enter any deficiencies when neither radio button is selected.
Did you observe or see the facility take any actions during the inspection to address the deficiencies noted?	These radio buttons are used to indicate whether or not any actions were taken by the facility to correct deficiencies.	The user must select one of these radio buttons if they select either Yes or No in answer to the question, ' If you observed deficiencies during inspection, did you communicate the deficiencies to the facility at that time?': • To indicate that the facility took actions or was observed to have taken actions to correct the noted deficiencies, the user must click on the Yes radio button. • To indicate that the facility did not take actions, or was not observed to have taken actions to correct the noted deficiencies, the user must click on the No radio button. If neither button was selected in answer to the question, ' If you observed deficiencies during inspection, did you communicate the deficiencies to the facility at that time?', then the user cannot select either Yes or No here.

Field	Description	Business Rules/Instructions
If Yes, Corrective Action Taken	This lists the corrective action(s) taken to address the noted deficiencies.	• To enter data in this list box, the user must click on the Edit Corrective Actions button to select one or more actions from the resulting multi-select pop-up window. • The user must select one or more corrective actions when the answer to the question, 'Did you observe or see the facility take any actions during the inspection to address the deficiencies noted?', is Yes. • The user cannot select any corrective actions when the answer to that question is No.
Water Pollutants	This lists the water pollutant(s) that were identified in the deficiency and had corrective action taken.	• Water pollutants is an optional field; however, the user must select at least one water pollutant when the selected corrective actions include Reduced Pollution (e.g., User Reduction, Indstrl Process Change, Emissions or Discharge Change) is selected. • To enter data in this list box, the user must click on the Edit Water Pollutants button to select one or more pollutants from the resulting multi-select pop-up window.
Air Pollutants	This lists the air pollutant(s) that were identified in the deficiency and had corrective action taken.	• Air Pollutants is an optional field; however, the user must select at least one air pollutant when the selected corrective actions include, Reduce(d) Pollution (e.g., Cease Excess Air Emissions). • To enter data in this list box, the user must click on the Edit Air Pollutants button to select one or more pollutants from the resulting multi-select pop-up window.
Did you provide compliance assistance during the inspection?	These radio buttons are used to indicate whether or not compliance assistance was given during the inspection.	• To indicate that compliance assistance was given during the inspection, the user must click on the Yes radio button. • To indicate that compliance assistance was not given during the inspection, the user must click on the No radio button.

Field	Description	Business Rules/Instructions
If yes, what type of assistance did you provide?	These radio buttons are used to indicate what kind of compliance assistance, if any, was provided during the inspection: • Tier 1- Distribution or sharing information on regulatory compliance, P2, or technical written assistance materials or websites and EPA, state, and local assistance programs. • Tier 2 - Assistance when they share information and insight into a facility's particular compliance problem and/or information on recognized industry practices to reduce or eliminate pollution at the facility. • Both – Both Tier 1 and Tier 2 assistance was provided during the inspection.	• The user must select one of these three radio buttons when the answer to the question, 'Did you provide compliance assistance during the inspection?' is Yes. • The user cannot select any of these three radio buttons when the question, 'Did you provide compliance assistance during the inspection?', is not answered (i.e., neither the Yes or No radio button is selected) or the answer is No.
Summary Comments	EPA inspectors may wish to provide a narrative description of actions taken by the facility or assistance to help the facility come into compliance.	

Table 9.1.4-2: Compliance Monitoring Buttons

Button Actions	
Button	**Action**
Save	The user clicks on this button to validate and save the compliance monitoring data. If required fields are left blank at the time of the save, an alert, 'The following fields are required:', listing the required fields is displayed. The user must enter each of the listed fields before attempting to save again. If a field fails the edit criteria, then an appropriate alert is displayed informing the user of the error and the user must correct the data before attempting to save again. Once the monitoring activity is successfully saved, the Compliance Monitoring Detail screen is automatically displayed, populated with the entered data. The message, '**Data has been successfully saved at <date, time>**' is displayed left aligned beneath the screen title.
Reset	The user clicks on Reset to revert the screen to its initial display values. Upon clicking on this button, the confirmation message, 'Do you want to reset this record's data?', is displayed. The user then has the option of clicking on OK to clear the entered data and revert to the screen defaults on the Add screen or to the last saved record on the Detail screen, or clicking on Cancel to leave the screen populated with the data that they have just entered and/or updated.
Delete	• The user clicks on this button to display a pop-up window that lists the number of dependencies linked to the current incident and prompts the user to confirm their intent to delete it (i.e., The Activity <compliance monitoring name> has the following dependencies. Do you want to delete it?). • This button is only available on the Compliance Monitoring Detail screen. • This button is only available for users with the rights to delete Compliance Monitoring activities.

Button Actions	
Button	**Action**
Release Data	• The user clicks on this button to display a pop-up window that lists the number of dependencies linked to the current Compliance Monitoring activity and prompts the user to confirm their intent to release it (i.e., The Activity <compliance monitoring name> has the following dependencies. Do you want to release it?). • This button is only available on the Compliance Monitoring Detail screen. • This button is only available for users with the rights to release Compliance Monitoring data from internal review for the program associated with the Compliance Monitoring activity. • See Section 4 for a description of the Internal Review functionality.
Add Compliance Determination	• The user clicks on this button to open the Add Compliance Determination screen from the Compliance Monitoring Detail screen. The user must click on Save to save any updates input on the Compliance Monitoring Detail screen; the Add Compliance Determination button will not save the monitoring data. • This button is only available on the Compliance Monitoring Detail screen.